BARNABIE POINT PROJECT

VICINITY MAP

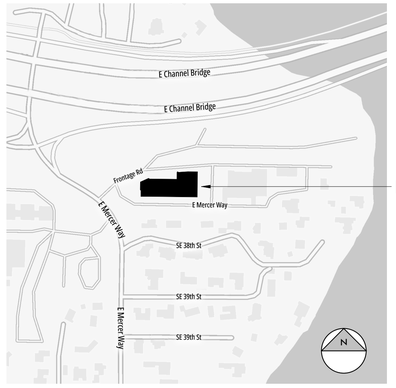

DESIGN TEAM

ARCHITECT
ANJALI GRANT DESIGN
3427 BEACON AVE S
SEATTLE, WA 98144
(206) 512-4209

CIVIL ENGINEER
JACOBSON CONSULTING ENGINEERS
255 S KING ST, SUITE 800
SEATTLE, WA 98104
(206) 426-2600

STRUCTURAL ENGINEER
PCS STRUCTURAL SOLUTIONS
1011 WESTERN AVE, UNIT 810
SEATTLE, WA 98104
(206) 292-5076

MECHANICAL
HOLADAY-PARKS INC
4600 S 134TH PL, TUKWILA, WA 98168
(206) 248-9700

PLUMBING
STIRRETT JOHNSEN INC
5555 NW WESTGATE RD,
SILVERDALE, WA 98383
(360) 692-6128

ELECTRICAL ENGINEER
TF-WB
1200 WESTLAKE AVE N,
SEATTLE, WA 98109
(206) 285-7228

LANDSCAPE ARCHITECT
KK-LA
111 WEST JOHN STREET, SUITE 306
SEATTLE, WA 98119
(206) 323-6032

ACOUSTICS
A3 ACOUSTICS LLP
1909 25TH AVE S, SUITE A
SEATTLE, WA 98144
(206) 551-5280

SEPA CONSULTANT
JEFF DING
EA ENGINEERING, SCIENCE &
TECHNOLOGY, INC
2200 SIXTH AVENUE, SUITE 707
SEATTLE, WA 98121

ENVIRONMENTAL
RAEDEKE ASSOCIATES, INC.
2111 N. NORTHGATE WAY STE. 219
SEATTLE, WASHINGTON, 98133
(206) 525-8122

GEOTECHNICAL
ASSOCIATED EARTH SCIENCES, INC.
911 5TH AVENUE
KIRKLAND, WASHINGTON 98033
425-827-7701

DEFERRED PERMITS & SUBMITTALS

PERMIT REQUIRED FOR:
1. FIRE SPRINKLER/STANDPIPE
2. FIRE UNDERGROUND SUPPLY
3. FIRE ALARM
4. EMERGENCY RESPONDER COMMUNICATION SYSTEM
5. PLUMBING
6. MECHANICAL
7. FENCE GATE

INSPECTIONS
1. SEE SHEET S-004 FOR REQUIRED STRUCTURAL SPECIAL INSPECTIONS
2. FRAMING PER 110.3.4
3. GYPSUM PANELS AS PART OF FIRE-RESISTIVE CONSTRUCTION PER 110.3.6
4. FIRESTOPPED JOINTS AND PENETRATIONS
5. ENERGY EFFICIENCY INSPECTIONS, INCLUDING U- AND R-VALUES FOR INSULATION AND EXTERIOR OPENINGS.

DEFERRED SUBMITTALS
1. MODULAR BLOCK SITE RETAINING WALL
2. BUCKLING RESTRAINED BRACES
3. DCDA VAULT

SHOP DRAWINGS NOT REQUIRING AHJ REVIEW
1. CONCRETE MIX DESIGNS
2. REINFORCING STEEL SHOP DRAWINGS
3. STRUCTURAL STEEL
4. METAL DECK
5. COLD-FORMED STEEL FRAMING
6. PREFABRICATED METAL STAIRS AND LANDINGS
7. MISCELLANEOUS STEEL
8. EMBEDS AND PENETRATIONS IN CONCRETE
9. CONSTRACTOR'S STATEMENT OF RESPONSIBILITY

CODE ALTERNATES

1. LIGHTING CONTROLS CODE ALTERNATE

PROJECT DATA

PROJECT NAME AND DESCRIPTION
BARNABIE POINT PROJECT
3-STORY MIXED-USE BUILDING HOUSING A PRESCHOOL-8 PRIVATE SCHOOL AND COMMUNITY MULTIPURPOSE SPACE ON LEVELS 0, 1 AND 2; AND COMMUNITY OFFICE RENTAL SPACE ON LEVELS 2 AND 3.

FILE NUMBER
CUP24-001

OWNER
HERZL-NER-TAMID CONSERVATIVE CONGREGATION

ADDRESS
3700 E MERCER WAY
MERCER ISLAND, WA 98040

ZONING DESIGNATION
B, R-9.6

LEGAL DESCRIPTION
PARCEL A: (APN 082405-9045-07)
THAT PORTION OF GOVERNMENT LOT 11, SECTION 8, TOWNSHIP 24 NORTH, RANGE 5 EAST, W.M., IN KING COUNTY, WASHINGTON; TOGETHER WITH THAT PORTION OF THE SOUTHEAST QUARTER OF SECTION 7, TOWNSHIP 24 NORTH, RANGE 5 EAST, W.M., IN KING COUNTY, WASHINGTON, DESCRIBED AS FOLLOWS:
BEGINNING AT THE INTERSECTION OF THE WEST LINE OF GOVERNMENT LOT 11 WITH THE NORTH LINE OF DOYLE-HANSEN ADDITION, ACCORDING TO THE PLAT THEREOF RECORDED IN VOLUME 75 OF PLATS, PAGE 24, RECORDS OF KING COUNTY, WASHINGTON;
THENCE SOUTH 89°09'34" EAST SLONG THE NORTH OF SAID DOYLE-HANSEN ADDITION, A DISTANCE OF 253.49 FEET TO THE WEST LINE OF LOT 7 OF CHANNEL CREST, ACCORDING TO THE PLAT THEREOF RECORDED IN COLUME 72 OF PLATS, PAGE 63, RECORDS OF KING COUNTY, WASHINGTON;
THENCE NORTH 01°12'29" EAST ALONG SAID WEST LINE, A DISTANCE OF 111.48 FEET TO THE SOUTH LINE OF TRACT "A" OF SAID CHANNEL CREST;
THENCE SOUTH 85°39'49" WEST ALONG SAID SOUTH LINE 173.15 FEET TO SOUTHEASTERLY LINE OF LAND CONVEYED TO STATE OF WASHINGTON TOLL BRIDGE AUTHORITY UNDER RECORDING NO. 3032009;
THENCE SOUTH 65°24'55" WEST ALONG SOUTHEASTERLY LINE TO THE EASTERLY MARGIN OF EAST MERCER WAY, AS CONVEYED TO KING COUNTY UNDER RECORDING NO. 923897;
THENCE SOUTH 01°02'29" WEST TO THE NORTH LINE OF SAID DOYLE-HANSEN ADDITION;
THENCE SOUTH 89°09'34" EAST ALONG SAID NORTH LINE 70.61FEET TO THE POINT OF BEGINNING.

PARCEL B: (APN 210700-0010-06)
LOTS 1 THROUGH 5, INCLUSIVE, DOYLE-HANSEN ADDITION, ACCORDING TO THE PLAT THEREOF RECORDED IN VOLUME 75 OF PLATS, PAGE 24, RECORDS OF KING COUNTY, WASHINGTON.

PARCEL C: (APN 151560-0010-06)
LOTS 1 THROUGH 7, INCLUSIVE, CHANNEL CREST, ACCORDING TO THE PLAT THEREOF RECORDED IN VOLUME 72 OF PLATS, PAGE 63, RECORDS OF KING COUNTY, WASHINGTON;

TOGETHER WITH AN UNDIVIDED 7/8THS INTEREST IN TRACT "A" OF SAID PLAT.

SITUATE IN THE COUNTY OF KING, STATE OF WASHINGTON.

ASSESSOR'S PARCEL NUMBER
0824059045, 1515600010, 2107000010, 151560TRCT

SHEET INDEX

SHEET #	SHEET NAME
A-001	SHEET INDEX, ABBREVIATIONS, SYMBOL LEGEND, GENERAL NOTES
A-002	GENERAL INFORMATION, GROSS FLOOR AREA AND GRADE PLANE DIAGRAMS
A-003	HEIGHT DIAGRAMS
A-004	BUILDING CODE NOTES
A-005	LIFE SAFETY PLANS
A-006	LIFE SAFETY SITE PLANS
A-007	ENERGY CODE DIAGRAMS
A-008	ENVELOPE ASSEMBLIES
A-010	LAND USE/SITE PLAN
A-011	SITE PLAN ENLARGED-WEST
A-012	SITE PLAN ENLARGED-EAST
A-013	DESIGN REVIEW AND CONDITIONAL USE PERMITS
1	SURVEY PROVIDED FOR REFERENCE ONLY
2	SURVEY PROVIDED FOR REFERENCE ONLY
3	SURVEY PROVIDED FOR REFERENCE ONLY
4	SURVEY PROVIDED FOR REFERENCE ONLY
5	SURVEY PROVIDED FOR REFERENCE ONLY
6	SURVEY PROVIDED FOR REFERENCE ONLY
7	SURVEY PROVIDED FOR REFERENCE ONLY
C0.00	COVER SHEET
C0.10	OVERALL SITE PLAN
C1.00	OVERALL DEMO PLAN
C1.01	DEMO PLAN
C1.02	DEMO PLAN
C2.00	OVERALL MASS EXCAVATION AND TESC PLAN
C2.01	MASS EXCAVATION AND TESC PLAN
C2.02	MASS EXCAVATION AND TESC PLAN
C2.10	TESC DETAILS
C2.11	TESC DETAILS
C3.00	OVERALL GRADING PLAN
C3.01	GRADING PLAN
C3.02	GRADING PLAN
C3.10	GRADING DETAILS
C3.20	GRADING SECTIONS
C3.21	GRADING SECTIONS
C4.00	OVERALL STORM DRAINAGE PLAN
C4.01	STORM DRAINAGE PLAN
C4.02	STORM DRAINAGE PLAN
C4.10	STORM DRAINAGE DETAILS
C4.20	STORM DRAINAGE PROFILES
C5.00	OVERALL UTILITY PLAN
C5.01	UTILITY PLAN
C5.02	UTILITY PLAN
C5.10	UTILITY DETAILS
C5.11	UTILITY DETAILS
C5.12	UTILITY DETAILS
C5.20	UTILITY PROFILES
C6.00	OVERALL PAVING AND STRIPING PLAN
C6.01	PAVING AND STRIPING PLAN
C6.02	PAVING AND STRIPING PLAN
C6.10	PAVING DETAILS
C6.11	PAVING DETAILS
C7.00	OVERALL FIRE ACCESS PLAN
SH1.0	COVER SHEET & NOTES
SH2.0	SHORING PLAN
SH3.0	WALL ELEVATION
SH4.0	DETAILS
L-101	TREE PROTECTION PLAN - WEST
L-102	TREE PROTECTION PLAN - EAST
L-103	TREE INVENTORY & PROTECTION
L-104	TREE REPLACEMENT
L-201	LANDSCAPE MATERIALS & LAYOUT
L-202	LANDSCAPE MATERIALS & LAYOUT
L-203	HARDSCAPE & MATERIALS DETAILS
L-301	PLANTING PLAN
L-302	PLANTING PLAN
L-302.1	PLANTING PLAN
L-303	PLANTING DETAILS
IR-101	LANDSCAPE IRRIGATION PLAN
IR-102	LANDSCAPE IRRIGATION PLAN
IR-103	LANDSCAPE IRRIGATION DETAILS
1 (EXIST. SANCTUARY)	SITE PLAN (FOR REFERENCE ONLY)
2 (EXIST. SANCTUARY)	UPPER FLOOR PLAN (FOR REFERENCE ONLY)
S-1 (EXIST. SANCTUARY)	FOUNDATION PLAN (FOR REFERENCE ONLY)
S-4 (EXIST. SANCTUARY)	ROOF FRAMING PLANS (FOR REFERENCE ONLY)
S-6 (EXIST. SANCTUARY)	ROOF FRAMING DETAILS (FOR REFERENCE ONLY)
S-000	COVER SHEET
S-001	GENERAL NOTES
S-002	GENERAL NOTES
S-003	GENERAL NOTES
S-004	GENERAL NOTES
S-005	GENERAL NOTES
S-006	GENERAL NOTES
S-010	SITE STRUCTURE PARTIAL PLANS AND DETAILS
S-100	LEVEL B01 FOUNDATION & GRADE LEVEL PLAN
S-101	LEVEL L01 FOUNDATION & FLOOR FRAMING PLAN
S-102	LEVEL L02 FLOOR FRAMING PLAN
S-103	LEVEL L03 FLOOR & LOW ROOF FRAMING PLAN
S-104	ROOF FRAMING PLAN
S-201	BRACED FRAME ELEVATIONS
S-202	BRACED FRAME ELEVATIONS
S-301	FOUNDATION DETAILS
S-302	FOUNDATION DETAILS
S-303	FOUNDATION DETAILS
S-304	FOUNDATION DETAILS
S-305	FOUNDATION DETAILS
S-401	STEEL FRAMING DETAILS
S-402	STEEL FRAMING DETAILS
S-403	STEEL FRAMING DETAILS
S-404	STEEL FRAMING DETAILS
S-405	STEEL FRAMING DETAILS
S-406	STEEL FRAMING DETAILS
S-407	STEEL FRAMING DETAILS
S-408	STEEL FRAMING DETAILS
S-420	STEEL FRAMING DETAILS
S-421	STEEL FRAMING DETAILS
S-422	STEEL FRAMING DETAILS
S-423	STEEL FRAMING DETAILS
S-501	COLD-FORMED STEEL FRAMING DETAILS
S-502	COLD-FORMED STEEL FRAMING DETAILS
S-503	COLD-FORMED STEEL FRAMING DETAILS
S-504	COLD-FORMED STEEL FRAMING DETAILS
A-100	B01 FLOOR PLAN
A-100F	B01 FURN PLAN
A-100FF	B01 FLOOR FINISH PLAN
A-101	L01 FLOOR PLAN
A-101A	L01 ASSEMBLY PLANS
A-101F	L01 FURN PLAN
A-101FF	L01 FINISH FLOOR PLAN
A-102	L02 FLOOR PLAN
A-102F	L02 FURN PLAN
A-102FF	L02 FINISH FLOOR PLAN
A-103	L03 FLOOR PLAN
A-103F	L03 FURN PLAN
A-103FF	L03 FLOOR FINISH PLAN
A-104	ROOF PLAN
A-105	EXISTING CANOPY ALTERATIONS
A-110	B01 RCP
A-111	L01 RCP
A-112	L02 RCP
A-113	L03 RCP
A-201	EXTERIOR ELEVATIONS
A-202	EXTERIOR ELEVATIONS
A-203	INTERIOR ELEVATIONS B01
A-204	INTERIOR ELEVATIONS LEVEL B01/ L01
A-205	INTERIOR ELEVATIONS L01
A-206	INTERIOR ELEVATIONS L01
A-207	INTERIOR ELEVATIONS L01
A-208	INTERIOR ELEVATIONS L01
A-209	INTERIOR ELEVATIONS L01/ L02
A-210	INTERIOR ELEVATIONS L02/ L03
A-211	INTERIOR ELEVATIONS L03
A-252	ADA STANDARD DETAILS, TYP MOUNTING HEIGHTS AND SIGNAGE
A-301	BUILDING SECTIONS
A-302	BUILDING SECTIONS
A-350	WALL SECTIONS
A-351	WALL SECTIONS
A-352	WALL SECTIONS
A-353	TRASH ENCLOSURE & MECHANICAL SCREEN
A-401	STAIRS
A-402	STAIRS
A-404	ELEVATOR
A-405	RESTROOMS
A-406	RESTROOMS
A-407	RESTROOMS
A-408	RESTROOMS
A-501	EXTERIOR DETAILS - FOUNDATION
A-502	EXTERIOR DETAILS - OPENINGS
A-503	EXTERIOR DETAILS - OPENINGS
A-504	EXTERIOR DETAILS - WALLS+SOFFITS
A-505	EXTERIOR DETAILS - ROOF
A-506	EXTERIOR DETAILS
A-601	ROOM FINISH AND CASEWORK SCHEDULE
A-602	EXT OPENINGS & SCHEDULE
A-603	EXTERIOR STOREFRONT & CURTAIN WALL
A-606	RELITE & DOOR TYPES & INTERIOR DTLS
A-607	INTERIOR DOOR SCHEDULE
A-701	INTERIOR WALL ASSEMBLIES
A-702	CEILING ASSEMBLIES
A-703	UL ASSEMBLY U415 & N501
A-704	UL ASSEMBLY U419
BE000	NOTES & SPECIFICATIONS
BE001	SPECIFICATIONS CONTINUED
BE002	MATERIAL LOCATION DIAGRAMS
BE003	MATERIAL LOCATION DIAGRAMS
BE004	MATERIAL LOCATION DIAGRAMS
BE100	BELOW GRADE DETAILS
BE101	BELOW GRADE DETAILS
BE200	WALL DETAILS
BE201	WALL DETAILS
BE300	PENETRATION DETAILS
BE301	PENETRATION DETAILS
BE400	DECK & ABOVE GRADE DETAILS
BE500	WINDOW & DOOR DETAILS
BE501	WINDOW & DOOR DETAILS
BE502	WINDOW & DOOR DETAILS
BE503	WINDOW & DOOR DETAILS
BE504	WINDOW & DOOR DETAILS
BE600	ROOF DETAILS
BE601	ROOF DETAILS
BE602	ROOF DETAILS
BE603	ROOF DETAILS
BE604	ROOF DETAILS
BE605	ROOF DETAILS
BE800	AIR BARRIER NOTES
BE801	AIR BARRIER DIAGRAMS
BE802	AIR BARRIER DIAGRAMS
BE900	ENERGY CODE NOTES
BE901	BUILDING ENVELOPE ENERGY FORMS
BE902	BUILDING ENVELOPE ENERGY FORMS
BE903	BUILDING ENVELOPE ENERGY FORMS
BE-202	WALL DETAILS
P0.00	PLUMBING SPECIFICATIONS
P0.01	PLUMBING SPECIFICATIONS
P0.02	PLUMBING SCHEDULES
P0.03	PLUMBING SCHEDULES
P2.UG	PLUMBING UNDERGROUND
P2.B1.1	PLUMBING LEVEL B1 WASTE AND VENT
P2.B1.2	PLUMBING LEVEL B1 DOMESTIC WATER
P2.01.1	PLUMBING LEVEL 01 WASTE AND VENT
P2.01.2	PLUMBING LEVEL 01 DOMESTIC WATER
P2.02.1	PLUMBING LEVEL 02 WASTE AND VENT
P2.02.2	PLUMBING LEVEL 02 DOMESTIC WATER
P2.03.1	PLUMBING LEVEL 03 WASTE AND VENT
P2.03.2	PLUMBING LEVEL 03 DOMESTIC WATER
P2.RF	PLUMBING ROOF LEVEL
P3.00	PLUMBING DETAILS
P3.01	PLUMBING DETAILS
P3.02	PLUMBING DETAILS
P4.00	WASTE & VENT RISER DIAGRAM (WEST)
P4.01	WASTE & VENT RISER DIAGRAM (EAST)
P4.10	DOMESTIC WATER RISER DIAGRAM (WEST)
P4.11	DOMESTIC WATER RISER DIAGRAM (EAST)
M0.01	LEGENDS AND NOTES
M0.02	LEGENDS AND NOTES
M0.03	LEGENDS AND NOTES
M0.04	LOAD CALCULATIONS
M0.05	LOAD CALCULATIONS
M0.06	LOAD CALCULATIONS
M0.07	LOAD CALCULATIONS
M0.08	LOAD CALCULATIONS
M0.09	LOAD CALCULATIONS
M2.00	LEVEL B01 HVAC PLAN
M2.01	LEVEL 01 HVAC PLAN
M2.02	LEVEL 02 HVAC PLAN
M2.03	LEVEL 03 HVAC PLAN
M2.RF	ROOF HVAC PLAN
MP2.00	LEVEL B01 HVAC PIPING PLAN
MP2.01	LEVEL 01 HVAC PIPING PLAN
MP2.02	LEVEL 02 HVAC PIPING PLAN
MP2.03	LEVEL 03 HVAC PIPING PLAN
MP2.RF	ROOF HVAC PIPING PLAN
M4.01	SECTIONS
M5.01	RISER DIAGRAM
M5.02	RISER DIAGRAM
M5.03	RISER DIAGRAM
M6.01	DETAILS
M6.02	STRUCTURAL CALCULATIONS
M6.03	STRUCTURAL CALCULATIONS
M6.04	STRUCTURAL CALCULATIONS
M6.05	STRUCTURAL CALCULATIONS
M6.06	STRUCTURAL CALCULATIONS
M7.01	SCHEDULES
M7.02	SCHEDULES
M7.03	SCHEDULES
E-100	LEGEND
E-101	SITE PLAN - ELECTRICAL
E-102	SITE PLAN-LIGHT CALC
E-200	B01 FLOOR PLAN - LIGHTING
E-201	LEVEL 01 FLOOR PLAN - LIGHTING
E-202	LEVEL 02 FLOOR PLAN - LIGHTING
E-203	LEVEL 03 FLOOR PLAN - LIGHTING
E-300	B01 FLOOR PLAN - POWER
E-301	LEVEL 01 FLOOR PLAN - POWER
E-302	LEVEL 02 FLOOR PLAN - POWER
E-303	LEVEL 03 FLOOR PLAN - POWER
E-304	ROOF PLAN - POWER
E-305	KITCHEN PLAN - ELECTRICAL
E-400	B01 FLOOR PLAN-COMM
E-401	LEVEL 01 FLOOR PLAN-COMM
E-402	LEVEL 02 FLOOR PLAN-COMM
E-403	LEVEL 03 FLOOR PLAN-COMM
E-500	B01 FLOOR PLAN-ESS
E-501	LEVEL 01 FLOOR PLAN-ESS
E-502	LEVEL 02 FLOOR PLAN-ESS
E-503	LEVEL 03 FLOOR PLAN-ESS
E-600	ONE LINE DIAGRAM
E-601	COMM RISER DIAGRAM
E-602	RACK DETAILS
E-700	LIGHT FIXTURE SCHEDULE
E-701	LIGHT FIXTURE SCHEDULE
E-702	LIGHTING CONTROL SCHEDULE
E-703	LIGHTING CONTROL SCHEDULE
E-704	LIGHTING CONTROL SCHEDULE
E-705	LIGHTING CONTROL SCHEDULE
E-800	MECHANICAL SCHEDULE
E-801	MECHANICAL SCHEDULE
E-802	PANEL SCHEDULES
E-803	PANEL SCHEDULES
K1	KITCHEN EQUIPMENT PLAN
K2	KITCHEN ELECTRICAL ROUGH-IN PLAN, KITCHEN PLUMBING ROUGH-IN PLAN, KITCHEN WALL BACKING PLAN

SHEET COUNT: 291

3427 BEACON AVE S
SEATTLE 98144
ANJALI@AGRANTDESIGN.COM
206-512-4209

anjali grant design LLC

3700 E MERCER WAY
BARNABIE POINT PROJECT

NO.	DATE	DESCRIPTION
2	1/6/2026	BLDG PERMIT CORRECTIONS
1	10/22/2025	BLDG PERMIT CORRECTIONS

4 JUNE 2025

BUILDING PERMIT

PROJECT:

SHEET INDEX, ABBREVIATIONS, SYMBOL LEGEND, GENERAL NOTES

A-001

1/6/2026 1:24:22 PM D:\REVIT LOCAL\BPP_PSB_R24_CD_anjalistfile.rvt
© ANJALI GRANT DESIGN LLC ORIGINAL SHEET SIZE: 24" X 36"

SYMBOLS

GRID LINES

LEVEL HEAD

NORTH ARROW

ROOM NAME & NUMBER

SPOT ELEVATION

CALLOUT VIEW

DETAIL VIEW

EXTERIOR ELEVATION

BUILDING SECTION/
WALL SECTION

INTERIOR ELEVATION

DRAWING BLOCK TITLE

REVISION

DOOR

CEILING

ASSEMBLY TYPE

FLOOR FINISH TRANSITION

STANDARD CASEWORK

WINDOW TYPE TAG

FLOOR/ROOF/EQUIPMENT TAG

ABBREVIATIONS

AB	ANCHOR BOLT
ACT	ACOUSTICAL CEILING TILE
ADDL	ADDITIONAL
AFF	ABOVE FINISH FLOOR
AL	ALUMINUM
ANOD	ANODIZE(D)
APPROX	APPROXIMATE
ARCH	ARCHITECT
BD	BOARD
BITUM	BITUMINOUS
BLDG	BUILDING
BLKG	BLOCKING
BM	BEAM
BO	BOTTOM OF
BOT	BOTTOM
C	CHANNEL
CB	CATCH BASIN
CG	CORNER GUARD
CL	CENTERLINE
CLG	CEILING
CLR	CLEAR
CMU	CONCRETE MASONRY UNIT
COL	COLUMN
CONC	CONCRETE
CONT	CONTINUOUS
CONTR	CONTRACT (OR)
COORD	COORDINATE
CPT	CARPET (ED)
CT	CERAMIC TILE
DEMO	DEMOLISH, DEMOLITION
DET	DETAIL
DF	DRINKING FOUNTAIN
DIA	DIAMETER
DIM	DIMENSION
DN	DOWN
DS	DOWNSPOUT
DWG	DRAWING
E	EAST
EA	EACH
EL	ELEVATION
ELEC	ELECTRIC (AL)
ELEV	ELEVATOR
ENCL	ENCLOSE (URE)
EQ	EQUAL
EQUIP	EQUIPMENT
EW	EACH WAY
EXIST	EXISTING
EXP	EXPANSION
EXT	EXTERIOR
FAF	FLUID APPLIED FLASHING
FD	FLOOR DRAIN
FDN	FOUNDATION
FEC	FIRE EXTINGUISHER CABINET
FF	FINISH FACE
FH	FUME HOOD
FIN	FINISH (ED)
FLR	FLOOR
FOC	FACE OF CONCRETE
FOF	FACE OF FINISH
FOIC	FURNISHED BY OWNER, INSTALLED BY CONTRACTOR
FOM	FACE OF MASONRY
FOS	FACE OF STUDS
FRMG	FRAMING
FRT	FIRE-RETARDANT-TREATED
FT	FOOT, FEET
FTG	FOOTING
GA	GAGE
GALV	GALVANIZED, GALVANIC
GAR	GARAGE
GB	GRAB BAR, GYPSUM BOARD
GC	GENERAL CONTRACTOR
GL	GLASS
GWB	GYPSUM
H	HIGH
HB	HOSE BIBB
HC	HANDICAP
HDW	HARDWARE
HM	HOLLOW METAL
HORIZ	HORIZONTAL
HR	HOUR
HT	HEIGHT
HVAC	HEATING, VENTILATION & AIR CONDITIONING
IBC	INTERNATIONAL BUILDING CODE
INCL	INCLUDING
INFO	INFORMATION
INSUL	INSULATION
INT	INTERIOR
JAN	JANITOR
LAV	LAVATORY
MAS	MASONRY
MATL	MATERIAL
MAX	MAXIMUM
MECH	MECHANICAL
MFD	MANUFACTURED
MFR	MANUFACTURE (R)
MIN	MINIMUM, MINUTE
MISC	MISCELLANEOUS
MO	MASONRY OPENING
MTD	MOUNTED
MTL	METAL
NA	NOT APPLICABLE
NIC	NOT IN CONTRACT
NO	NUMBER
NOM	NOMINAL
NTS	NOT TO SCALE
OA	OVERALL
OC	ON CENTER
OD	OUTSIDE DIAMETER
OH	OVERHANG
OPH	OPPOSITE HAND
OPNG	OPENING
OPP	OPPOSITE
ORD	OVERFLOW ROOF DRAIN
OVHD	OVERHEAD
PL	PROPERTY LINE
PLAM	PLASTIC LAMINATE
PLWD	PLYWOOD
PT	PAINT, PRESSURE-TREATED
PVG	PAVING
R	RADIUS, RISER
RB	RUBBER/RESILIENT BASE
RCP	REFLECTED CEILING PLAN
RD	ROOF DRAIN, ROAD
REQD	REQUIRED
RM	ROOM
RO	ROUGH OPENING
S	SOUTH
SAM	SELF ADHERING MEMBRANE
SAM-HT	SELF ADHERING MEMBRANE HIGH TEMP
SAM-MC	SELF ADHERING MEMBRANE METAL CLAD
SCHED	SCHEDULE
SF	SQUARE FOOT (FEET)
SHT	SHEET
SHTHG	SHEATHING
SIM	SIMILAR
SPKLR	SPRINKLER
SQ	SQUARE
SS	SANITARY SEWER, STANDING SEAM
SST	STAINLESS STEEL
ST	STAIRS, STREET
STD	STANDARD
STOR	STORAGE
STRUCT	STRUCTURE
SUSP	SUSPEND(ED)
SV	SHEET VINYL
T	TREAD
TB	TACK BOARD
TFF	TOP OF FINISH FLOOR
THRU	THROUGH
TMPD	TEMPERED
TYP	TYPICAL
UNO	UNLESS NOTED OTHERWISE
UTIL	UTILITY
VEH	VEHICLE
VERT	VERTICAL
VRFY	VERIFY
VIF	VERIFY IN FIELD
W	WEST, WIDE, WASHER
W/	WITH
W/O	WITHOUT
WC	WATER CLOSET
WD	WOOD, WOOD DOOR
WDW	WINDOW
WR	WEATHER RESISTANT, WATER REPELLENT
WRB	WEATHER-RESISTIVE BARRIER

GENERAL NOTES

1. COMPLY WITH APPLICABLE CODES AND ORDINANCES IN FORCE AT TIME OF BUILDING PERMIT ISSUANCE.
2. READ, UNDERSTAND AND COMPLY WITH ALL APPLICABLE PROVISIONS OF THE CONSTRUCTION DOCUMENTS FOR THE PROJECT.
3. UNLESS OTHERWISE NOTED, PLAN DIMENSIONS SHOWN ARE TO THE FACE OF STUD AT NEW INTERIOR PARTITIONS; FACE OF WALL AT EXISTING WALLS.
4. PLACE DOORS NOT LOCATED BY DIMENSION ON PLANS SIX INCHES FROM FACE OF ADJOINING PARTITION TO HINGE EDGE OF DOOR OPENING. PROVIDE 18" MINIMUM CLEAR FROM FACE OF ADJOINING PARTITION OR OTHER OBSTRUCTION TO STRIKE JAMB EDGE OF DOOR OPENING, UNLESS OTHERWISE NOTED. NOTIFY ARCHITECT IF REQUIRED CLEARANCES ARE NOT AVAILABLE.
5. PROVIDE FIRE-RESISTANT CLOSURE MEETING THE REQUIREMENTS OF THE GOVERNING FIRE AUTHORITIES AT ALL GAPS AROUND PENETRATING DUCTS, PIPES, CONDUITS, ETC. AT ALL FIRE RATED BUILDING WALLS, PARTITIONS, CEILINGS, FLOORS AND ROOFS.
6. ROOM AND DOOR NUMBERS SHOWN ON DRAWINGS ARE FOR CONSTRUCTION PURPOSES ONLY.
7. CONCEAL ALL PIPING, CONDUITS, DUCTS, ETC INSIDE WALLS AND ABOVE CEILINGS AT ALL ROOMS EXCEPT ELECTRICAL AND TELEPHONE CLOSETS AND MECHANICAL ROOMS. IN SPACES OPEN TO STRUCTURE, ONLY PIPING CONDUITS AND DUCTS THAT SERVE THE SPACE MAY BE EXPOSED. LOCATE SUCH INSTALLATIONS TO MINIMIZE VISIBILITY AND ORGANIZE TO MINIMIZE RUN LENGTHS AND OVERLAPPING. ARCHITECT TO REVIEW SHOP DRAWINGS FOR EXPOSED MECHANICAL, ELECTRICAL, PLUMBING ITEMS PRIOR TO FABRICATION AND INSTALLATION.
8. COORDINATE WORK WITH ALL OWNER-FURNISHED ITEMS AND PROVIDE ALL REQUIRED MECHANICAL AND ELECTRICAL CONNECTIONS INCLUDING STUB OUTS.
9. VERIFY ALL DIMENSIONS, EXISTING AND NEW CONDITIONS ON THE JOB BEFORE PROCEEDING WITH THE WORK.
10. NOTIFY THE ARCHITECT OF ANY DISCREPANCIES NOTED AMONG OR BETWEEN THE CONTRACT DOCUMENTS, OWNER-PROVIDED INFORMATION, SITE CONDITIONS, MANUFACTURER RECOMMENDATIONS, OR CODES, REGULATIONS, OR RULES OF JURISDICTIONS HAVING AUTHORITY PRIOR TO COMMENCEMENT OF ANY PORTION OF THE WORK.
11. THE CONTRACT DOCUMENTS ARE COMPLEMENTARY AND WHAT IS REQUIRED BY ONE IS BINDING AS IF REQUIRED BY ALL.
12. PROVIDE REPETITIVE FEATURES NOT INDICATED IN THE DRAWINGS EVERYWHERE THAT THEY OCCUR AS IF DRAWN IN FULL. NOT ALL OCCURRENCES OF A FEATURE ARE NOTED IN EVERY CASE.
13. CONSULT WORK OF ALL TRADES FOR ALL OPENINGS AND ROUGH-CUTS THROUGH SLABS, WALLS, CEILINGS AND ROOFS FOR DUCTS, PIPES, CONDUITS, CABINETS AND EQUIPMENT, AND VERIFY SIZE AND LOCATION BEFORE PROCEEDING WITH WORK.
14. VERIFY ALL ROUGH-IN DIMENSIONS REQUIRED FOR EQUIPMENT, INCLUDING THAT FURNISHED BY OTHERS, PRIOR TO PROCEEDING WITH WORK.
15. COORDINATE WITH MECHANICAL AND ELECTRICAL CONTRACTORS FOR EXACT LOCATIONS, TYPES AND SIZES OF ACCESS DOORS REQUIRED BY THEIR WORK. PROVIDED ACCESS FOR ALL CONCEALED VALVES, DAMPER CONTROLS, FIRE DAMPER LINKAGE, ELECTRICAL JUNCTION BOXES, ETC. DRAWINGS MAY NOT SHOW ALL REQUIRED ACCESS PANELS. INDICATE REQUIRED ACCESS DOORS ON THE COORDINATION DRAWINGS. OBTAIN ARCHITECT'S APPROVAL FOR LOCATIONS OF ACCESS DOORS PRIOR TO INSTALLATION.
16. PRESERVATIVE-TREAT ALL WOOD IN CONTACT WITH CONCRETE OR MASONRY AS REQUIRED BY CODE.
17. DO NOT SCALE DRAWINGS.
18. CONSTRUCT RECESSES LOCATED WITHIN FIRE RATED PARTITIONS TO MAINTAIN THE REQUIRED FIRE RATING OF THE PARTITION.
19. SITE SURVEY, GEOTECHNICAL INVESTIGATION, AND HAZARDOUS MATERIALS DOCUMENTATION WAS PREPARED BY CONSULTANTS TO THE OWNER AND NOT UNDER THE DIRECTION OF THE ARCHITECT. THIS DOCUMENTATION IS INCLUDED IN THE CONTRACT DOCUMENTS AS AN ACCOMMODATION TO THE OWNER.
20. REFER TO DOCUMENTS FOR GENERAL LOCATIONS OF VISIBLE EQUIPMENT, SIGNAL DEVICES, SIGNAGE, AND OTHER VISIBLE ITEMS. CONSULT WITH ARCHITECT FOR EXACT MOUNTING LOCATION.
21. SIX DIGIT NUMBERS AT DRAWING NOTES (09 26 00 GYPSUM BOARD FOR EXAMPLE) REFERENCE RELATED SPECIFICATION SECTIONS IN THE PROJECT MANUAL, THEY ARE NOT INTENDED TO ASSIGN WORK TO SUB-CONTRACTORS. ALL ITEMS ARE INCLUDED IN SCOPE WHETHER OR NOT A SPECIFICATION REFERENCE IS CITED.
22. REPAIR / PATCH / OR REINSTALL CEILINGS & WALLS REMOVED FOR MECHANICAL AND ELECTRICAL WORK ON THE FLOORS BELOW AND IN OTHER AREAS OF THE BUILDING BEYOND THE AREAS INDICATED.
23. IN GENERAL, NEW FINISHED FLOOR ELEVATIONS ARE TO ALIGN WITH EXISTING FINISHED FLOOR ELEVATIONS. THE FLOOR ELEVATIONS INDICATED ARE APPROXIMATE. CONTRACTOR TO VERIFY THE EXISTING ABUTTING FLOOR ELEVATIONS AND ADJUST THE NEW ELEVATIONS INDICATED AS NECESSARY. NOTIFY THE ARCHITECT WHERE DEVIATIONS EXCEEDING 1/2" ARE ENCOUNTERED.

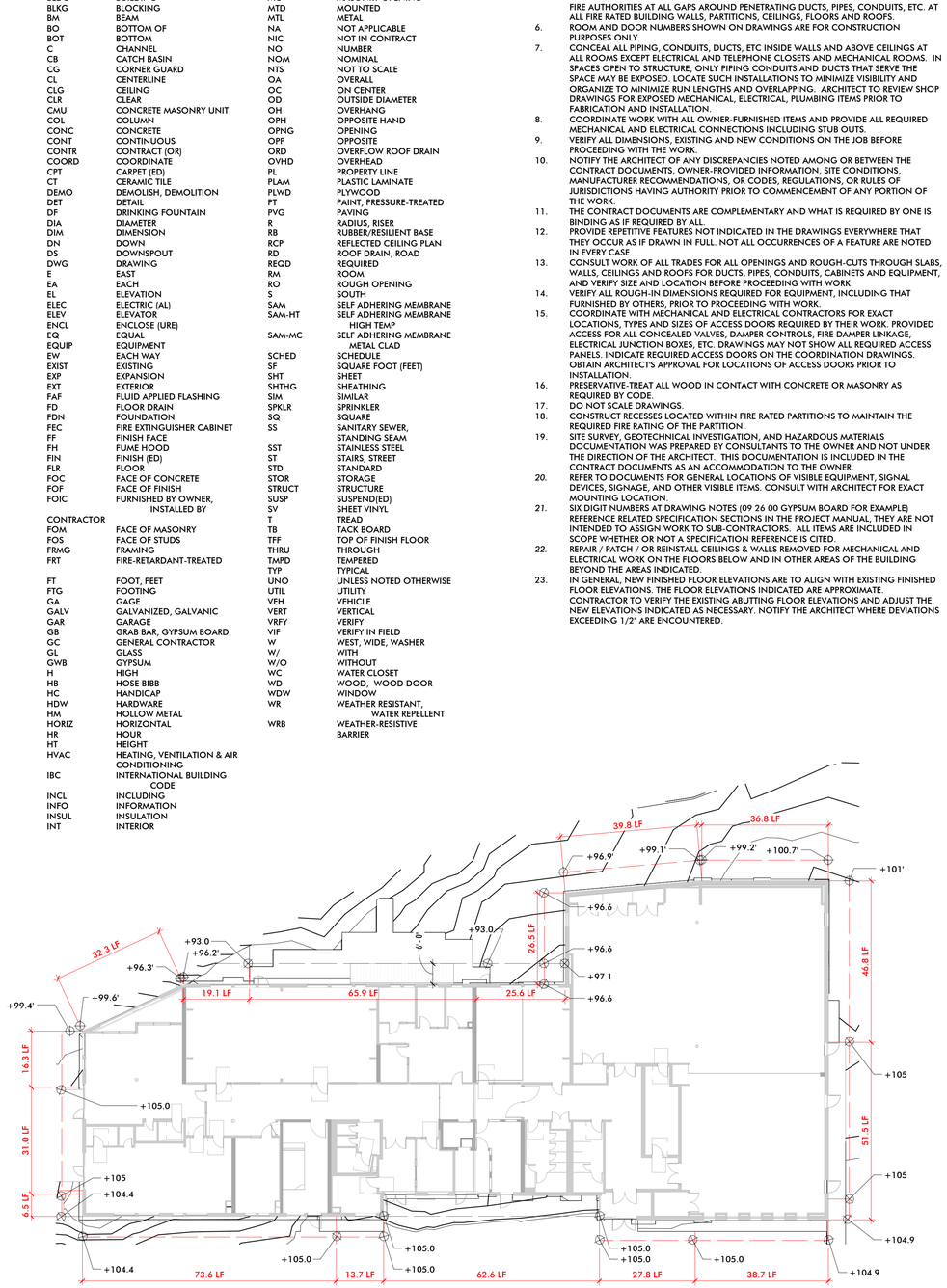

1 AVERAGE GRADE PLANE DIAGRAM

1" = 20'-0"



6 L03 BUILDING AREA DIAGRAM

1/32" = 1'-0"

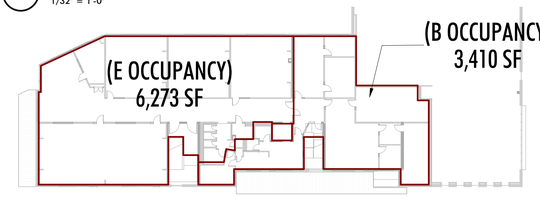

5 L02 BUILDING AREA DIAGRAM

1/32" = 1'-0"

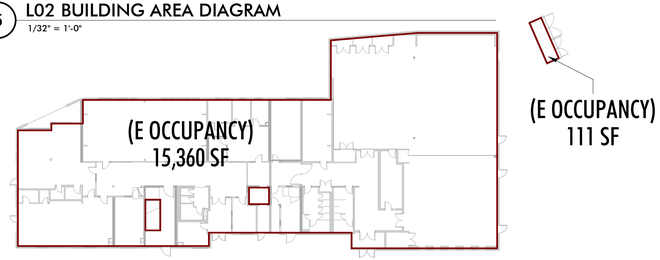

4 L01 BUILDING AREA DIAGRAM

1/32" = 1'-0"

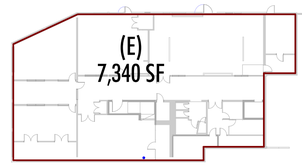

2 B01 BUILDING AREA DIAGRAM

1/32" = 1'-0"

		SURVEY ELEVATION				
WALL LENGTH		START	END	AVERAGE	LENGTH X ELEVATION	
32.3	LF	99.6	96.3	98	3163.8	
19.1	LF	96.2	93	94.6	1806.9	
69.1	LF	93	93	93	6426.3	
22.5	LF	93	98	95.5	2148.8	
26.5	LF	96.6	96.6	96.6	2559.9	
39.8	LF	96.9	99.1	98	3899.4	
36.8	LF	99.2	100.7	100	3678.5	
46.8	LF	101	105	103	4821.1	
38.7	LF	104.9	105	105	4061.6	
27.8	LF	105	105	105	2919	
6.1	LF	105	105	105	640.5	
62.6	LF	105	105	105	6573	
6.1	LF	105	105	105	640.5	
13.7	LF	105	105	105	1438.5	
73.6	LF	105	104.4	104.7	7705.9	
6.5	LF	104.4	105	104.7	680.6	
31	LF	105	105	105	3255	
16.3	LF	101	99.4	100.2	1633.3	
626.8	PERIMETER				63459.6	TOTAL
101.2		AVERAGE GRADE PLANE = TOTAL LENGTH X ELEVATION/PERIMETER				

GROSS FLOOR AREA

Level	Area	Comments
L02	3,410 SF	(B OCCUPANCY)
L03	8,016 SF	(B OCCUPANCY)
	11,426 SF	
L01	15,472 SF	(E OCCUPANCY)
L02	6,273 SF	(E OCCUPANCY)
	21,745 SF	
B01	7,340 SF	(E)
	7,340 SF	
	40,511 SF	

[BE] FLOOR AREA, GROSS. The floor area within the inside perimeter of the exterior walls of the building under consideration, exclusive of vent shafts and courts, without deduction for corridors, stairways, ramps, closets, the thickness of interior walls, columns or other features. The floor area of a building, or portion thereof, not provided with surrounding exterior walls shall be the usable area under the horizontal projection of the roof or floor above. The gross floor area shall not include shafts with no openings or interior courts.

[BG] GRADE PLANE. A reference plane representing the average of finished ground level adjoining the building at exterior walls. Where the finished ground level slopes away from the exterior walls, the reference plane shall be established by the lowest points within the area between the building and the lot line or, where the lot line is more than 6 feet from the building, between the building and a point 6 feet from the building.

[BG] STORY ABOVE GRADE PLANE. Any story having its finished floor surface entirely above grade plane, or in which the finished surface of the floor next above is:

1. More than 6 feet above grade plane; or
2. More than 12 feet above the finished ground level at any point.

12/12/2025 12:05:51 PM D:\REVIT LOCAL\BPP_PSB_R24_CD_anjaliatlw.rvt
© ANJALI GRANT DESIGN LLC

ORIGINAL SHEET SIZE: 24" X 36"

3427 BEACON AVE S
SEATTLE 98144
ANJALI@AGRANTDESIGN.COM
206-512-4209

anjali grant design LLC

3700 E MERCER WAY
BARNABIE POINT PROJECT

NO.	DATE	DESCRIPTION
	4 JUNE 2025	BUILDING PERMIT

PROJECT:

GENERAL INFORMATION, GROSS FLOOR AREA AND GRADE PLANE DIAGRAMS

A-002

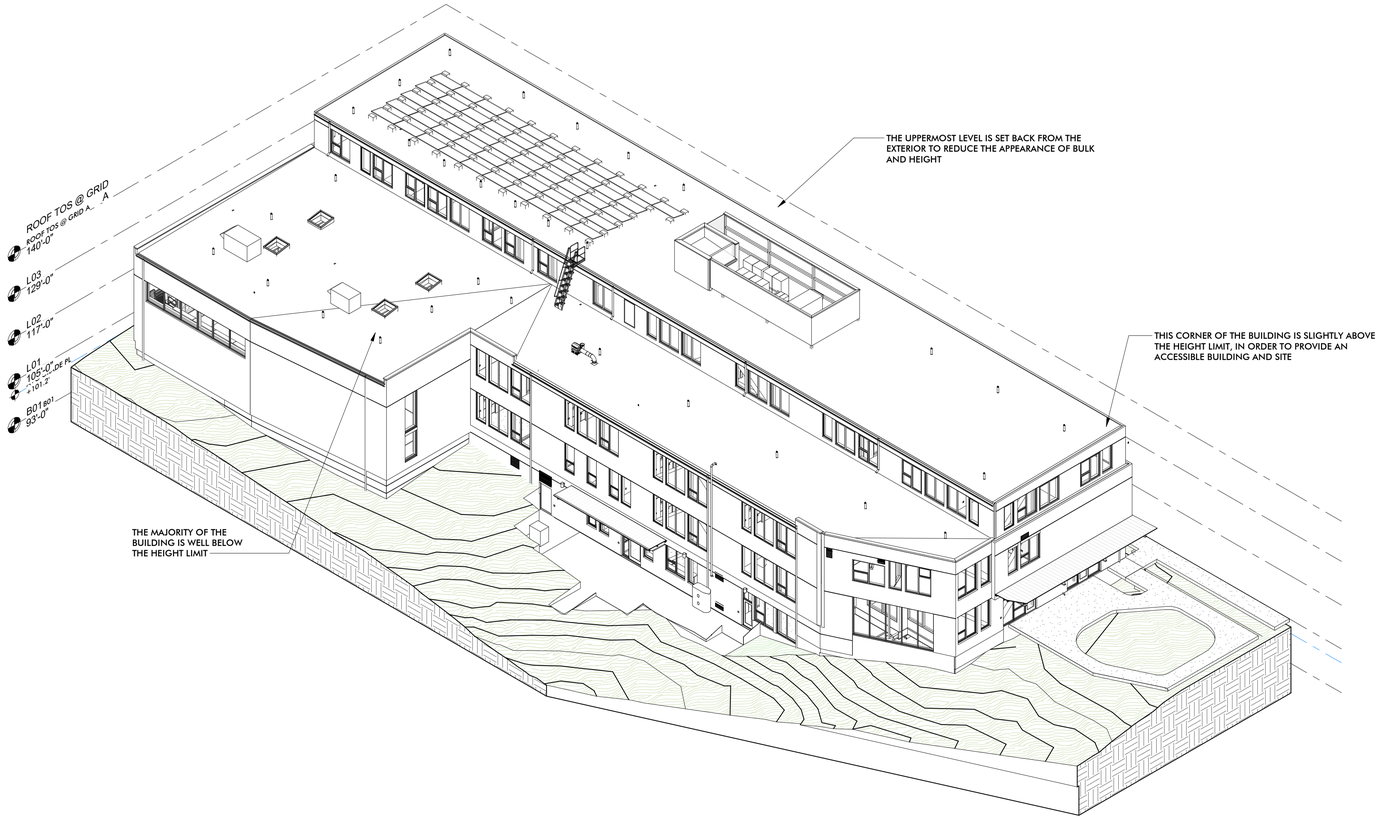

6 HEIGHT DIAGRAM

ORIENTATION	FAÇADE LENGTH		START	END	AVERAGE...		WEIGHTING FACTOR	
NORTH	24	LF			27.9	FT	4%	1.1
NORTH	9.5	LF	27.9	29.3	28.6	FT	2%	0.4
NORTH	29	LF	29.3	31.9	30.6	FT	5%	1.4
NORTH	12.8	LF			31.9	FT	2%	0.7
NORTH	14.7	LF	33.4	36.1	34.75	FT	2%	0.8
NORTH	8.7	LF	34.4	36	35.2	FT	1%	0.5
NORTH	69.3	LF			36	FT	11%	4.1
NORTH	11.3	LF	36	33.6	34.8	FT	2%	0.6
NORTH	7.8	LF	35.3	33.8	34.55	FT	1%	0.4
NORTHWEST	24.3	LF	33.6	30.6	32.1	FT	4%	1.3
NORTHWEST	8	LF			30.5	FT	1%	0.4
WEST	26.6	LF	33.6	31.1	32.35	FT	4%	1.4
WEST	12.4	LF	29.8	28.7	29.25	FT	2%	0.6
WEST	2.9	LF	38.2	37.9	38.05	FT	0%	0.2
WEST	31	LF	35.3	35.9	35.6	FT	5%	1.8
WEST	1	LF			26.2	FT	0%	0
WEST	7.5	LF	35.9	36.6	36.25	FT	1%	0.4
EAST	41.4	LF	36	35.2	35.6	FT	7%	2.4
EAST	9.2	LF			25.7	FT	1%	0.4
EAST	46.9	LF	25.7	29.4	27.55	FT	8%	2.1
SOUTH	64.2	LF	36.5	36	36.25	FT	10%	3.8
SOUTH	152.2	LF			36	FT	25%	8.9
	614.7	LF						33.8 FT

HEIGHT AS A WEIGHTED AVERAGE

19.04.050 D. BUILDING HEIGHT LIMIT. MAXIMUM ALLOWABLE BUILDING HEIGHT SHALL BE THE LESSER OF (1) THREE STORIES OR (2) 36 FEET, CALCULATED USING THE METHOD DESCRIBED IN MICC 19.11.030(A)(3).

19.11.030 (A)(3) CALCULATION OF BUILDING HEIGHT

A. THE INTENT OF THE BUILDING HEIGHT CALCULATION IN THIS SECTION IS TO LIMIT THE VISUAL MASS OF A BUILDING SO THAT IT DOES NOT APPEAR TO EXCEED THE MAXIMUM HEIGHT LIMIT IN SUBSECTION (A)(1) OF THIS SECTION.

B. THE MAXIMUM ALLOWABLE BUILDING HEIGHT IN SUBSECTION (A)(1) OF THIS SECTION SHALL BE CALCULATED AS THE VERTICAL DISTANCE MEASURED FROM THE BASE OF A BUILDING FACADE TO THE HIGHEST POINT OF THE ROOF STRUCTURE EXCLUDING APPURTENANCES. THE BASE OF THE BUILDING FACADE SHALL BE MEASURED FROM THE ADJACENT PUBLIC SIDEWALK IF APPLICABLE, OR FROM THE LOWER OF EXISTING OR FINISHED GRADE ALONG BUILDING FACADES THAT ARE NOT ADJACENT TO A PUBLIC SIDEWALK. SEE FIGURE 4.

C. IF THE BASES OF THE OPPOSITE BUILDING FACADES ARE NOT AT APPROXIMATELY THE SAME ELEVATION, THEN THE BUILDING MUST BE CONFIGURED TO GO DOWN IN HEIGHT AS BETWEEN THE HIGHER AND LOWER FACADES IN A MANNER SIMILAR TO FIGURE 4 OR IN AN EQUIVALENT MANNER SUCH THAT THE AVERAGE OF THE BUILDING HEIGHTS CALCULATED BETWEEN THE FACADES IS APPROXIMATELY EQUAL TO OR LESS THAN THE MAXIMUM PERMITTED BUILDING HEIGHT.

19.11.030 (A)(5).... IF NECESSARY, ROOFTOP APPURTENANCES MAY EXTEND UP TO TEN FEET ABOVE THE MAXIMUM BUILDING HEIGHT ALLOWED, PROVIDED THERE IS A FUNCTIONAL NEED FOR THE APPURTENANCE AND THAT FUNCTIONAL NEED CANNOT BE MET WITH AN APPURTENANCE OF A LESSER HEIGHT.

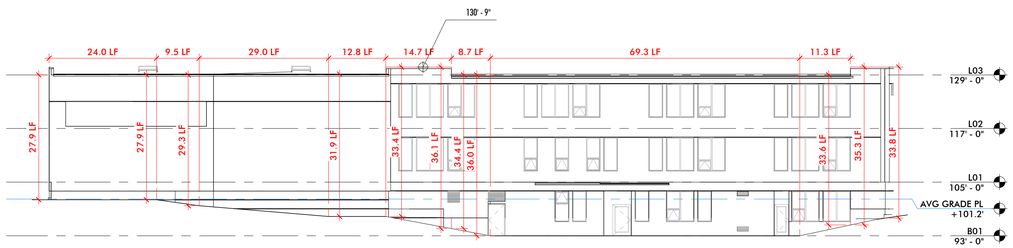

5 NORTH ELEVATION HEIGHT DIAGRAM
1/16" = 1'-0"

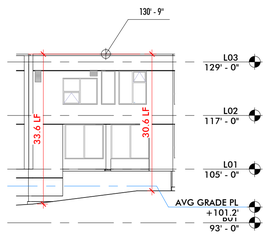

4 NW ELEVATION HEIGHT DIAGRAM
1/16" = 1'-0"

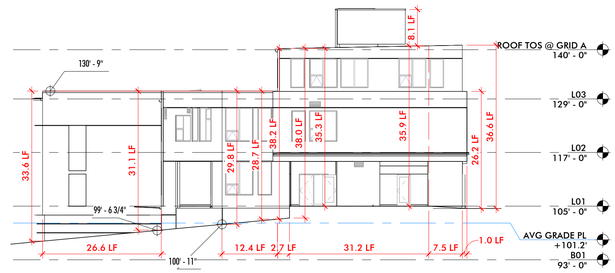

3 WEST ELEVATION HEIGHT DIAGRAM
1/16" = 1'-0"

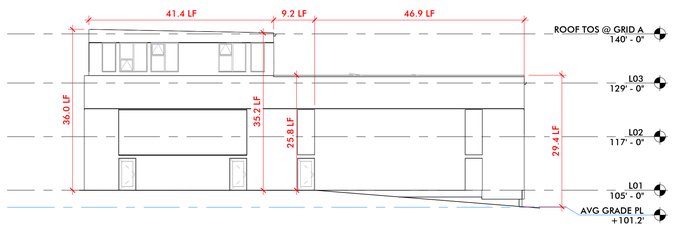

2 EAST ELEVATION HEIGHT DIAGRAM
1/16" = 1'-0"



1 SOUTH ELEVATION HEIGHT DIAGRAM
1/16" = 1'-0"

3427 BEACON AVE S
SEATTLE 98144
ANJALI@AGRANTDESIGN.COM
206-512-4209
anjali grant design LLC

3700 E MERCER WAY
BARNABIE POINT PROJECT

NO.	DATE	DESCRIPTION
		4 JUNE 2025 BUILDING PERMIT

PROJECT:

HEIGHT DIAGRAMS

A-003

12/12/2025 12:06:01 PM D:\REVIT LOCAL\BPP_PSB_R24_CD_anjaliwtlib.rvt
© ANJALI GRANT DESIGN LLC ORIGINAL SHEET SIZE: 24" X 36"

BUILDING CODE REFERENCES

Code Reference	Code Section	Code Excerpt and Commentary
CODES USED		2021 Washington State Building Code (WSBC 2021) 2021 Washington State Energy Code (WSEC 2021) 2021 International Fire Code as amended by the City of Mercer Island (IFC 2021/ MI)
WSBC 2021	Definitions	GRADE PLANE. A reference plane representing the average of finished ground level adjoining the building at exterior walls. Where the finished ground level slopes away from the exterior walls, the reference plane shall be established by the lowest points within the area between the building and the lot line or, where the lot line is more than 6 feet from the building, between the building and a point 6 feet from the building.
WSBC 2021	302.1 Occupancy Classification	Group A Assembly Group B Business Group E Educational
WSBC 2021	303.1.3 Associated With Group E Occupancies	A room or space used for assembly purposes that is associated with a Group E occupancy is not considered a separate occupancy.
Mercer Island TITLE 17	Section 502.1 Amended — General Building Heights and Areas, General, Address Identification.	New and existing buildings shall be provided with approved address identification. The address identification shall be legible and placed in a position that is visible from the street or road fronting the property. Address identification characters shall contrast with their background. Address numbers shall be Arabic numbers or alphabetical letters. Numbers shall not be spelled out. Each character shall be not less than six (6) inches high with a minimum stroke width of 1/2 inch. Where required by the fire code official, address identification shall be provided in additional approved locations to facilitate emergency response. Where access is by means of a private road and the building cannot be viewed from the public way, a monument, pole or other sign or means shall be used to identify the structure. Address identification shall be maintained.
WSBC 2021	Table 504.3 Allowable Building Height in Feet Above Grade Plane	Occupancy Classification A, B, E, F, M, S, U Sprinklered, Type IIB: 75 feet
WSBC 2021	Table 504.4 Allowable Number of Stories Above Grade Plane	A-3 Occupancy: 3 stories (see 303.1.3, not considered a separate occupancy) B Occupancy: 4 stories E Occupancy: 3 stories
WSBC 2021	Table 506.2 Allowable Area Factor	A-3 Occupancy: 28,500 sf (see 303.1.3, not considered a separate occupancy) B Occupancy: 69,000 sf E Occupancy: 43,500 sf
WSBC 2021	TABLE 506.3.3 FRONTAGE INCREASE FACTOR	75-100% of building perimeter has 30' or greater open space.
WSBC 2021	508.3.1 [Nonseparated] Occupancy Classification	Nonseparated occupancies shall be individually classified in accordance with Section 302.1. The requirements of this code shall apply to each portion of the building based on the occupancy classification of that space. In addition, the most restrictive provisions of Chapter 9 that apply to the nonseparated occupancies shall apply to the total nonseparated occupancy area.
WSBC 2021	508.3.2 Allowable Building Area, Height and Number of Stories	The allowable building area, height and number of stories of the building or portion thereof shall be based on the most restrictive allowances for the occupancy groups under consideration for the type of construction of the building in accordance with Section 503.1.
WSBC 2021	Chapter 6 Types of Construction	Type IIB (noncombustible)
WSBC 2021	603.1 Allowable Materials	Combustible materials shall be permitted in buildings of Type I or II construction in the following applications and in accordance with Sections 603.1.1 through 603.1.3: 2. Thermal and acoustical insulation, other than foam plastics, having a flame spread index of not more than 25. 3. Foam plastics in accordance with Chapter 26. 4. Roof coverings that have an A, B or C classification. 5. Interior floor finish and floor covering materials installed in accordance with Section 804. 6. Millwork such as doors, door frames, window sashes and frames. 7. Interior wall and ceiling finishes installed in accordance with Section 803. 8. Trim installed in accordance with Section 806. 10. Finish flooring installed in accordance with Section 805. 12. Stages and platforms constructed in accordance with Sections 410.2 and 410.3, respectively. 14. Blocking such as for handrails, millwork, cabinets and window and door frames.
WSBC 2021	704.3 Protection of the Primary Structural Frame Other Than Columns	Members of the primary structural frame other than columns that are required to have protection to achieve a fire-resistance rating and support more than two floors or one floor and roof, or support a load-bearing wall or a nonload-bearing wall more than two stories high, shall be provided individual encasement protection by protecting them on all sides for the full length, including connections to other structural members, with materials having the required fire-resistance rating. Exception: Individual encasement protection on all sides shall be permitted on all exposed sides provided that the extent of protection is in accordance with the required fire-resistance rating, as determined in Section 703.
WSBC 2021	704.4.1 Light-Frame Construction	Studs, columns and boundary elements that are integral elements in walls of light-frame construction and are located entirely between the top and bottom plates or tracks shall be permitted to have required fire-resistance ratings provided by the membrane protection provided for the wall.
WSBC 2021	705.2.1 Types I and II Construction	Projections from walls of Type I or II construction shall be of noncombustible materials or combustible materials as allowed by Sections 705.2.3.1 and 705.2.4.
WSBC 2021	TABLE 705.5 Fire-Resistance Rating Requirements for Exterior Walls Based on Fire Separation Distance	Construction Type IIB; fire separation distance of 10 feet or more; Occupancy Groups A, B, E, 0 hours
WSBC 2021	707.3.1 Shaft Enclosures	The fire-resistance rating of the fire barrier separating building areas from a shaft shall comply with Section 713.4.
WSBC 2021	707.3.2 Interior Exit Stairway and Ramp Construction	The fire-resistance rating of the fire barrier separating building areas from an interior exit stairway or ramp shall comply with Section 1023.1.
WSBC 2021	707.5 Continuity	Fire barriers shall extend from the top of the foundation or floor/ceiling assembly below to the underside of the floor or roof sheathing, slab or deck above and shall be securely attached thereto. Such fire barriers shall be continuous through concealed space, such as the space above a suspended ceiling. Joints and voids at intersections shall comply with Sections 707.8 and 707.9 Exceptions: 1. Shaft enclosures shall be permitted to terminate at a top enclosure complying with Section 713.12. 1. Interior exit stairway and ramp enclosures required by Section 1023 and exit access stairway and ramp enclosures required by Section 1019 shall be permitted to terminate at a top enclosure complying with Section 713.12.
WSBC 2021	707.5.1 Supporting Construction	The supporting construction for a fire barrier shall be protected to afford the required fire-resistance rating of the fire barrier supported. Hollow vertical spaces within a fire barrier shall be fireblocked in accordance with Section 718.2 at every floor level.
WSBC 2021	713.12 Enclosure at Top	The top of shaft enclosures shall comply with one of the following: 1. Extend to the underside of the roof sheathing, deck or slab of the building, and the roof assembly shall comply with the requirements for the type of construction as specified in Table 601.

BUILDING CODE REFERENCES

Code Reference	Code Section	Code Excerpt and Commentary
WSBC 2021	713.14 Elevator, Dumbwaiter and Other Hoistways	Elevator, dumbwaiter and other hoistway enclosures shall be constructed in accordance with Sections 712 and 713, and Chapter 30.
Mercer Island TITLE 17	IBC Section 903.2 Amended — Fire Protection Systems, Automatic Sprinkler Systems, Where Required.	Approved automatic sprinkler systems shall be installed in all newly constructed buildings and structures with a gross floor area of 5,000 square feet or greater and shall be provided in the locations described in Sections 903.2.1 through 903.2.12.
Mercer Island TITLE 17	IBC Section 907.2 Amended — Where Required—New Buildings and Structures.	An approved fire alarm system installed in accordance with the provisions of this Code and NFPA 72 shall be provided in new buildings and structures in accordance with Sections 907.2.1 through 907.2.23. For all newly constructed buildings with a gross floor area of 3,000 or greater square feet an approved manual and automatic fire alarm system shall be installed. The system shall provide occupant notification in accordance with Section 907.5, unless other requirements are provided by another section of this Code. A minimum of one manual fire alarm box shall be provided in an approved location to initiate a fire alarm signal for fire alarm systems employing automatic fire detectors or water-flow detection devices. Where other sections of this Code allow elimination of fire alarm boxes due to sprinklers, a single fire alarm box shall be installed. Exceptions: 1. The manual fire alarm box is not required for fire alarm systems dedicated to elevator recall control and supervisory service.
WSBC 2021	Section 905 Standpipe Systems	Class III standpipe systems shall be installed throughout buildings where any of the following conditions exist: 2. The floor level of the highest story is located more than 30 feet above the lowest level of fire department vehicle access. Exceptions: Class I standpipes are allowed in buildings equipped throughout with an automatic sprinkler system in accordance with Section 903.3.1.1 or 903.3.1.2.
WSBC 2021	[F] 905.4 Location of Class I Standpipe Hose Connections	Class I standpipe hose connections shall be provided in all of the following locations: 1. In every required interior exit stairway, a hose connection shall be provided for each story above and below grade plane. Hose connections shall be located at the main floor landing unless otherwise approved by the fire code official. 2. On each side of the wall adjacent to the exit opening of a horizontal exit. Exception: Where floor areas adjacent to a horizontal exit are reachable from an interior exit stairway hose connection by a 30-foot hose stream from a nozzle attached to 100 feet of hose, a hose connection shall not be required at the horizontal exit. 5. Where the roof has a slope less than 4 units vertical in 12 units horizontal , a hose connection shall be located to serve the roof or at the highest landing of an interior exit stairway with access to the roof provided in accordance with Section 1011.12.
WSBC 2021	[F] 907.2.3 Group E	Group E occupancies shall be provided with a manual fire alarm system that initiates the occupant notification signal utilizing ... 1. An emergency voice/alarm communication system meeting the requirements of Section 907.5.2.2 and installed in accordance with Section 907.6.
WSBC 2021	1005.3.1 Stairways	Exception 1. For other than Group H and I-2 occupancies, the capacity, in inches, of means of egress stairways shall be calculated by multiplying the occupant load served by such stairways by a means of egress capacity factor of 0.2 inch per occupant in buildings equipped throughout with an automatic sprinkler system installed in accordance with Section 903.3.1.1 or 903.3.1.2 and an emergency voice/alarm communication system in accordance with Section 907.5.2.2.
WSBC 2021	100.53.2 Other egress components	Exception 1. For other than Group H and I-2 occupancies, the capacity, in inches, of means of egress components other than stairways shall be calculated by multiplying the occupant load served by such component by a means of egress capacity factor of 0.15 inch per occupant in buildings equipped throughout with an automatic sprinkler system installed in accordance with Section 903.3.1.1 or 903.3.1.2 and an emergency voice/alarm communication system in accordance with Section 907.5.2.2.
WSBC 2021	1005.6 Egress Convergence	Where the means of egress from stories above and below converge at an intermediate level, the capacity of the means of egress from the point of convergence shall be not less than the largest minimum width or the sum of the required capacities for the stairways or ramps serving the two adjacent stories, whichever is larger.
WSBC 2021	1005.7.1 Doors	Doors, when fully opened, shall not reduce the required width by more than 7 inches. Doors in any position shall not reduce the required width by more than one-half.
WSBC 2021	1006.2.1.1 Three or More Exits or Exit Access Doorways	Three exits or exit access doorways shall be provided from any space with an occupant load of 501 to 1,000. Four exits or exit access doorways shall be provided from any space with an occupant load greater than 1,000.
WSBC 2021	1006.3.4 Single Exits	A single exit or access to a single exit shall be permitted from any story or occupied roof where one of the following conditions exists: 1. The occupant load, number of dwelling units and exit access travel distance within the portion of the building served by the single exit do not exceed the values in Table 1006.3.4(1) or 1006.3.4(2). 2. Rooms, areas and spaces complying with Section 1006.2.1 with exits that discharge directly to the exterior at the level of exit discharge, are permitted to have one exit or access to a single exit.
WSBC 2021	TABLE 1006.3.4(2)	STORIES WITH ONE EXIT OR ACCESS TO ONE EXIT FOR OTHER OCCUPANCIES [than R-2] First story above or below grade plane, occupancy B/E: 49 max occ load per story First story above or below grade plane, occupancy S: 29 max occ load per story Third story above grade plane and higher - Not Permitted
WSBC 2021	1007.1.1 Two Exits or Exit Access Doorways	1007.1.1 Two Exits or Exit Access Doorways Where two exits, exit access doorways, exit access stairways or ramps, or any combination thereof, are required from any portion of the exit access, they shall be placed a distance apart equal to not less than one-half of the length of the maximum overall diagonal dimension of the building or area to be served measured in a straight line between them. Interlocking or scissor stairways shall be counted as one exit stairway. Exception 2. Where a building is equipped throughout with an automatic sprinkler system in accordance with Section 903.3.1.1 or 903.3.1.2, the separation distance shall be not less than one-third of the length of the maximum overall diagonal dimension of the area served.
WSBC 2021	1007.1.2 Three or More Exits or Exit Access Doorways	Where access to three or more exits is required, not less than two exit or exit access doorways shall be arranged in accordance with the provisions of Section 1007.1.1. Additional required exit or exit access doorways shall be arranged a reasonable distance apart so that if one becomes blocked, the others will be available.

BUILDING CODE REFERENCES

Code Reference	Code Section	Code Excerpt and Commentary
WSBC 2021	1007.1.3.1 Three or More Exit Access Stairways or Ramps	Where more than two exit access stairways or ramps provide the required means of egress, not less than two shall be arranged in accordance with Section 1007.1.3.
WSBC 2021	1009.1 Accessible Means of Egress Required	Accessible means of egress shall comply with this section. Accessible spaces shall be provided with not less than one accessible means of egress. Where more than one means of egress is required by Section 1006.2 or 1006.3 from any accessible space, each accessible portion of the space shall be served by not less than two accessible means of egress.
WSBC 2021	1009.2.1 Elevators Required	In buildings where a required accessible floor or occupied roof is four or more stories above or below a level of exit discharge, not less than one required accessible means of egress shall be an elevator complying with Section 1009.4. (Not applicable.)
WSBC 2021	1009.2 Continuity and Components	Each required accessible means of egress shall be continuous to a public way and shall consist of one or more of the following components: 1. Accessible routes complying with Section 1104. 2. Interior exit stairways complying with Sections 1009.3 and 1023.
WSBC 2021	1009.3.2 Stairway Width	Stairways shall have a clear width of 48 inches minimum between handrails. Exceptions: 1. The clear width of 48 inches between handrails is not required in buildings equipped throughout with an automatic sprinkler system installed in accordance with Section 903.3.1.1 or 903.3.1.2.
WSBC 2021	1009.3.3 Area of Refuge	Stairways shall either incorporate an area of refuge within an enlarged floor-level landing or shall be accessed from an area of refuge complying with Section 1009.6. Exceptions: 2. Areas of refuge are not required at stairways in buildings equipped throughout with an automatic sprinkler system installed in accordance with Section 903.3.1.1 or 903.3.1.2.
WSBC 2021	1009.8 Two-Way Communication	A two-way communication system complying with Sections 1009.8.1 and 1009.8.2 shall be provided at the landing serving each elevator or bank of elevators on each accessible floor that is one or more stories above or below the level of exit discharge.
WSBC 2021	1011.2 Width and Capacity	The required capacity of stairways shall be determined as specified in Section 1005.1, but the minimum width shall be not less than 44 inches. Exceptions: 1. Stairways serving an occupant load of less than 50 shall have a width of not less than 36 inches.
WSBC 2021	1011.6 Stairway Landings	The width of landings, measured perpendicularly to the direction of travel, shall be not less than the width of stairways served. Every landing shall have a minimum depth, measured parallel to the direction of travel, equal to the width of the stairway or 48 inches, whichever is less. Doors opening onto a landing shall not reduce the landing to less than one-half the required width. When fully open, the door shall not project more than 7 inches into the required width of a landing.
WSBC 2021	1011.7.3 Enclosures Under Interior Stairways	The walls and soffits within enclosed usable spaces under enclosed and unenclosed stairways shall be protected by 1-hour fire-resistance-rated construction or the fire-resistance rating of the stairway enclosure, whichever is greater. Access to the enclosed space shall not be directly from within the stairway enclosure.
WSBC 2021	1014.6 Handrail Extensions	Handrails shall return to a wall, guard or the walking surface or shall be continuous to the handrail of an adjacent flight of stairs or ramp run. Where handrails are not continuous between flights, the handrails shall extend horizontally not less than 12 inches beyond the top riser and continue to slope for the depth of one tread beyond the bottom riser.
WSBC 2021	1013.1 Where Required	Exits and exit access doors shall be marked by an approved exit sign readily visible from any direction of egress travel. The path of egress travel to exits and within exits shall be marked by readily visible exit signs to clearly indicate the direction of egress travel in cases where the exit or the path of egress travel is not immediately visible to the occupants. Intervening means of egress doors within exits shall be marked by exit signs. Exit sign placement shall be such that any point in an exit access corridor or exit passageway is within 100 feet or the listed viewing distance of the sign, whichever is less, from the nearest visible exit sign. Exceptions: 1. Exit signs are not required in rooms or areas that require only one exit or exit access.
WSBC 2021	1016.2 Egress Through Intervening Spaces	Egress through intervening spaces shall comply with this section. 2. Egress from a room or space shall not pass through adjoining or intervening rooms or areas, except where such adjoining rooms or areas and the area served are accessory to one or the other, are not a Group H occupancy and provide a discernible path of egress travel to an exit. 5. Egress shall not pass through kitchens, storage rooms, closets or spaces used for similar purposes.
WSBC 2021	1017.2 [Exit Access] Limitations	Exit access travel distance shall not exceed the values given in Table 1017.2. Occupancy A, E, F-1, M, R, S-1 - 250 feet with sprinkler system Occupancy B - 300 feet with sprinkler system
WSBC 2021	1020.2 Construction	Corridors shall be fire-resistance rated in accordance with Table 1020.2. The corridor walls required to be fire-resistance rated shall comply with Section 708 for fire partitions. Occupancy A, B, E, F, M, S, U - 0 hours required fire-resistance rating with sprinkler system
WSBC 2021	1023.1 General	Interior exit stairways and ramps serving as an exit component in a means of egress system shall comply with the requirements of this section. Interior exit stairways and ramps shall be enclosed and lead directly to the exterior of the building or shall be extended to the exterior of the building with an exit passageway conforming to the requirements of Section 1024, except as permitted in Section 1028.2. An interior exit stairway or ramp shall not be used for any purpose other than as a means of egress and a circulation path.
WSBC 2021	1023.2 Construction	Enclosures for interior exit stairways and ramps shall be constructed as fire barriers in accordance with Section 707 or horizontal assemblies constructed in accordance with Section 711, or both. Interior exit stairway and ramp enclosures shall have a fire-resistance rating of not less than 2 hours where connecting four stories or more and not less than 1 hour where connecting less than four stories. The number of stories connected by the interior exit stairways or ramps shall include any basements, but not any mezzanines.
WSBC 2021	1023.5 Penetrations	Penetrations into or through interior exit stairways and ramps are prohibited except for the following: 1. Equipment and ductwork necessary for independent ventilation or pressurization. 2. Fire protection systems. 3. Security systems. 4. Two-way communication systems. 5. Electrical raceway for fire department communication systems. 6. Electrical raceway serving the interior exit stairway and ramp and terminating at a steel box not exceeding 16 square inches (0.010 m2). 7. Structural elements supporting the interior exit stairway or ramp or enclosure, such as beams or joists. Such penetrations shall be protected in accordance with Section 714. There shall not be penetrations or communication openings, whether protected or not, between adjacent interior exit stairways and ramps. Exception: Membrane penetrations shall be permitted on the outside of the interior exit stairway and ramp. Such penetrations shall be protected in accordance with Section 714.4.2.
WSBC 2021	1023.7 Interior Exit Stairway and Ramp Exterior Walls	Exterior walls of the interior exit stairway or ramp shall comply with the requirements of Section 705 for exterior walls.
WSBC 2021	1023.8 Barrier at Level of Exit Discharge	An interior exit stairway and ramp shall not continue below its level of exit discharge unless an approved barrier is provided at the level of exit discharge to prevent persons from unintentionally continuing into levels below. Directional exit signs shall be provided as specified in Section 1013.

BUILDING CODE REFERENCES

Code Reference	Code Section	Code Excerpt and Commentary
WSBC 2021	1025.2 Markings Within Exit Components	Egress path markings shall be provided in interior exit stairways, interior exit ramps and exit passageways, in accordance with Sections 1025.2.1 through 1025.2.6.3.
WSBC 2021	1030.1 General	A room or space used for assembly purposes that contains seats, tables, displays, equipment or other material shall comply with this section.
WSBC 2021	1030.1.1 Bleachers	Bleachers, grandstands and folding and telescopic seating, that are not building elements, shall comply with ICC 300.
WSBC 2021	1030.3 Assembly Other Exits	In addition to having access to a main exit, each level in a building used for assembly purposes having an occupant load greater than 300 and provided with a main exit, shall be provided with additional means of egress that shall provide an egress capacity for not less than one-half of the total occupant load served by that level and shall comply with Section 1007.1. In a building used for assembly purposes where there is not a wall-defined main exit or where multiple main exits are provided, exits for each level shall be permitted to be distributed around the perimeter of the building, provided that the total width of egress is not less than 100 percent of the required width.
WSBC 2021	1030.5 Interior Balcony and Gallery Means of Egress	For balconies, galleries or press boxes having a seating capacity of 50 or more located in a building, room or space used for assembly purposes, not less than two means of egress shall be provided, with one from each side of every balcony, gallery or press box.
WSBC 2021	1103.2.2 Employee Work Areas	Spaces and elements within employee work areas shall only be required to comply with Sections 907.5.2.3.1, 1009 and 1104.3.1 and shall be designed and constructed so that individuals with disabilities can approach, enter and exit the work area. Work areas, or portions of work areas, other than raised courtroom stations in accordance with Section 1109.4.1.4, that are less than 300 square feet in area and located 7 inches or more above or below the ground or finished floor where the change in elevation is essential to the function of the space shall be exempt from all requirements.
WSBC 2021	1104.1 Site Arrival Points	At least one accessible route within the site shall be provided from public transportation stops, accessible parking, accessible passenger loading zones, and public streets or sidewalks to the accessible building entrance served.
WSBC 2021	1104.2 Within a Site	At least one accessible route shall connect accessible buildings, accessible facilities, accessible elements and accessible spaces that are on the same site. Exceptions: 1. An accessible route is not required between accessible buildings, accessible facilities, accessible elements and accessible spaces that have, as the only means of access between them, a vehicular way not providing for pedestrian access. 2. An accessible route to recreational facilities shall only be required to the extent specified in Section 1111.
WSBC 2021	1104.3.1 Employee Work Areas	Common use circulation paths, located within employee work areas that are less than 1,000 sf in size and defined by permanently installed partitions, counters, casework or furnishings, shall not be required to be accessible routes.
WSBC 2021	1104.4 Multistory Buildings and Facilities	At least one accessible route shall connect each accessible story, mezzanine and occupied roofs in multilevel buildings and facilities. Exceptions: 1. An accessible route is not required to stories, mezzanines and occupied roofs that have an aggregate area of not more than 3,000 square feet and are located above and below accessible levels.
WSBC 2021	1106.2 Required	Where parking is provided, accessible parking spaces shall be provided in compliance with Table 1106.2, except as required by Sections 1106.3 through 1106.5. Where more than one parking facility is provided on a site, the number of parking spaces required to be accessible shall be calculated separately for each parking facility.
		43 parking spaces are required per 19.04.040 16.D. Parking is shared. Two accessible parking spaces are required; 3 are provided.
WSBC 2021	1106.6 Van Spaces	For every six or fraction of six accessible parking spaces, at least one shall be a van-accessible parking space.
WSBC 2021	1110.2 Toilet and Bathing Facilities	Each toilet room and bathing room shall be accessible. Exception 3. Where multiple single-user all-gender toilet rooms or bathing rooms are clustered at a single location, at least 50 percent shall be accessible.
WSBC 2021	TABLE 1109.2.2.1 ACCESSIBLE WHEELCHAIR SPACES	Seating capacity 101-300: 5 wheelchair spaces.
WSBC 2022	1109.2.3 Companion Seats	At least one companion seat shall be provided for each wheelchair space required
WSBC 2023	1109.2.7 Assistive Listening Systems	Each building, room or space used for assembly purposes where audible communications are integral to the use of the space shall have an assistive listening system.
Mercer Island TITLE 17	IFC Section 503 Amended — Fire Apparatus Access Roads.	Fire apparatus access roads shall be provided and maintained in accordance with Sections 503.1.1 through 503.1.3 and/or local street, road and access standards as determined by the fire code official. 503.1.1 Buildings and facilities. Approved fire apparatus access roads shall be provided for every facility, building or portion of a building hereafter constructed or moved into or within the jurisdiction. The fire apparatus access road shall comply with the requirements of this section and shall extend to within 150 feet of all portions of the facility and all portions of the exterior walls of the first story of the building as measured by an approved route around the exterior of the building or facility. Exception: The fire code official is authorized to increase the dimension of 150 feet where: 1. The building is equipped throughout with an approved automatic sprinkler system installed in accordance with Section 903.3.1.1. 2. Fire apparatus access roads cannot be installed because of location on property, topography, waterways, nonnegotiable grades or other similar conditions, and an approved alternative means of fire protection is provided. 503.2.1 Dimensions. Fire apparatus access roads shall have an unobstructed width of not less than 20 feet, exclusive of shoulders, except for approved security gates in accordance with Appendix D Section D103.5, and an unobstructed vertical clearance of not less than 13 feet 6 inches.
Mercer Island TITLE 17	IFC Section 507.5.1 Amended — Fire Hydrant Systems, Where Required.	Where a portion of the facility or building hereafter constructed or moved into or within the jurisdiction is more than 150 feet from a hydrant on a fire apparatus access road, as measured by an approved route around the exterior of the facility or building, on-site fire hydrants and mains shall be provided where required by the fire code official. Exception: For buildings equipped throughout with an approved automatic sprinkler system installed in accordance with Section 903.3.1.1, 903.3.1.2, or 903.3.1.3, the distance requirement shall be 600 feet.
Mercer Island TITLE 17	IFC Section 507.5.1.1 Amended — Hydrant for Standpipe Systems.	507.5.1.1 Hydrant for standpipe and fire sprinkler systems. Buildings equipped with a standpipe System installed in accordance with Section 905 or a fire sprinkler system installed in accordance with Section 903 shall have a fire hydrant within 15 feet of the fire department connections. Exception: The distance shall be permitted to exceed 15 feet where approved by the fire code official.
Mercer Island TITLE 17	IFC Section 510 Amended — Emergency Responder Radio Coverage.	510.1 Emergency responder radio coverage (ERRC) in new buildings. Approved radio coverage for emergency responders within the building meeting any of the following conditions: 1. High rise buildings; (does not apply) 2. The total building area is 50,000 square feet or more; (does not apply) 3. The total basement area is 10,000 square feet or more; (does not apply) or 4. Buildings or structures where the Fire or Police Chief determined that in-building radio coverage is critical because of its unique design, location, or occupancy. Due to occupancy (E & A), large area below grade and size approaching prescriptive threshold, Fire Chief will require an ERRC system or a report at completion of construction showing signal strength in compliance with 510.4.1.1 and 510.4.1.2.

3427 BEACON AVE S
SEATTLE 98144
ANJALI@AGRANTDESIGN.COM
206-512-4209

anjali grant design LLC

3700 E MERCER WAY
BARNABIE POINT PROJECT

NO.	DATE	DESCRIPTION
1	10/22/2025	BLDG PERMIT CORRECTIONS

4 JUNE 2025

BUILDING PERMIT

PROJECT:

BUILDING CODE NOTES

A-004

12/12/2025 12:08:02 PM D:\REVIT LOCAL\BPP_PSB_R24_CD_anjalistitle.rvt
ORIGINAL SHEET SIZE: 24" X 36"
© ANJALI GRANT DESIGN LLC

AUTOMATIC FIRE SPRINKLER SYSTEM
PROVIDE AN AUTOMATIC FIRE SPRINKLER SYSTEM IN ACCORDANCE WITH THE 2021 IFC SECTION 903.3.1.1, NFPA 13 (2019 EDITION), AND CITY OF MERCER ISLAND STANDARDS. A SEPARATE FIRE PERMIT IS REQUIRED.

STANDPIPE SYSTEM
PROVIDE A CLASS I STANDPIPE SYSTEM IN ACCORDANCE WITH THE 2021 IFC SECTION 905.3.1, NFPA 14 (2019 EDITION), AND CITY OF MERCER ISLAND STANDARDS. A SEPARATE FIRE PERMIT IS REQUIRED, WHICH MAY BE COMBINED WITH THE FIRE SPRINKLER PERMIT.

FIRE SERVICE UNDERGROUND
FIRE SERVICE UNDERGROUND SUPPLY PIPING SHALL BE INSTALLED IN ACCORDANCE WITH THE 2021 IFC SECTIONS 507 & 912, NFPA 24 (2019 EDITION), AND CITY OF MERCER ISLAND STANDARDS. ALL UNDERGROUND PIPING SHALL BE INSTALLED BY A LEVEL U-CERTIFIED CONTRACTOR, INSPECTED, AND HYDROSTATICALLY TESTED PRIOR TO COVER. A SEPARATE FIRE PERMIT IS REQUIRED.

FIRE ALARM / EMERGENCY VOICE/ALARM COMMUNICATION SYSTEM (EVACS)
PROVIDE A FIRE ALARM SYSTEM IN ACCORDANCE WITH THE 2021 IFC SECTION 907, NFPA 72 (2019 EDITION), AND CITY OF MERCER ISLAND STANDARDS. THE SYSTEM SHALL INCLUDE EMERGENCY VOICE/ALARM COMMUNICATION (EVACS) NOTIFICATION WHERE REQUIRED BY OCCUPANCY. A SEPARATE FIRE PERMIT IS REQUIRED.

EMERGENCY RESPONDER RADIO COVERAGE SYSTEM (ERRCS)
PROVIDE EMERGENCY RESPONDER RADIO COVERAGE IN ACCORDANCE WITH THE 2021 IFC SECTION 510, AS AMENDED BY THE CITY OF MERCER ISLAND, AND NFPA 1221 (2019 EDITION). SIGNAL STRENGTH TESTING SHALL BE PERFORMED AT PROJECT COMPLETION; IF COMPLIANT COVERAGE IS NOT DEMONSTRATED PER IFC 510.4.1.1 AND 510.4.1.2, AN ERRCS SHALL BE INSTALLED. A SEPARATE FIRE PERMIT IS REQUIRED.

PLUMBING COUNTS PER CHAPTER 29

PROGRAM SPACE	AREA	OCC LOAD		1/2 OCC LOAD	TOILETS						LAVS					
					male		female		all-gender		male		female		all-gender	
					REQ	PROV	REQ	PROV	REQ	PROV	REQ	PROV	REQ	PROV	REQ	PROV
Multipurpose Room		747	per A-004	374	2.99		5.75				1.87		1.87			
Kitchen		2	per A-004	1	0.01		0.01				0.005		0....			
Total					4	4	6	6			2	2	2	3		
Group E Gross Area per A-003	29086	290.86	100 gsf/student	145.43	4.16		5.82				1.71		2.91			
Total									10	10					5	10
Group E staff areas		20	per A-004						1	2					1	2
Group B		78	per A-004						3	6					2	6

2902.5.2 MULTISTORY BUILDINGS
DRINKING FOUNTAINS ARE PROVIDED ON EACH FLOOR. EACH DRINKING FOUNTAIN INCLUDES AN INTEGRAL BOTTLE FILLING STATION PER 2902.5.4.1

EGRESS NOTES

1. MAIN DOORS ARE NOT PERMITTED TO BE LOCKED FROM THE EGRESS SIDE PER 1010.2.4
2. VESTIBULE DOORS ARE NOT PERMITTED TO BE LOCKED PER 1016.2.3

OCCUPANT LOAD

FUNCTION OF SPACE	AREA	OLF	OCCUPANT LOAD
B01			
BUSINESS	1,655 SF	150	11
CLASSRM-VOC	836 SF	50	17
CLASSRM-VOC	1,393 SF	50	28
STOR/MECH	1,415 SF	300	5
STOR/MECH	352 SF	300	2
			63
L01			
ASSEMBLY	5,169 SF	7	739
BUSINESS	751 SF	150	5
BUSINESS	162 SF	150	2
BUSINESS	156 SF	150	1
CHILD CARE/CLASSRM	835 SF	20	42
CHILD CARE/CLASSRM	844 SF	20	43
CLASSROOM	749 SF	20	38
CLASSROOM	1,521 SF	20	76
CLASSROOM	291 SF	20	15
KITCHEN	235 SF	200	2
STOR/MECH	70 SF	300	1
STOR/MECH	107 SF	300	1
STOR/MECH	52 SF	300	1
			966
L02			
ASSEMBLY	715 SF	15	48
BUSINESS	3,165 SF	150	22
CLASSROOM	751 SF	20	38
CLASSROOM	745 SF	20	38
CLASSROOM	753 SF	20	38
CLASSROOM	1,582 SF	20	80
CLASSROOM	189 SF	20	10
STOR/MECH	330 SF	300	2
			276
L03			
BUSINESS	5,459 SF	150	37
BUSINESS	1,432 SF	150	10
CLASSRM-VOC	661 SF	50	14
CLASSRM-VOC	333 SF	50	7
CLASSRM-VOC	431 SF	50	9
			77
Grand total			1382

REQUIRED EGRESS WIDTH
DIRECTION OF REQUIRED EXIT
32" REQ / 36" PROV — 20 OCC
NUMBER OF OCCUPANTS SERVED BY EXIT
NOMINAL SIZE OF DOOR OPENING

FUNCTION OF SPACE
1000 OCCPNTS — NUMBER OF OCCUPANTS
10 OLF — OCCUPANT LOAD FACTOR
150 SF — NET OR GROSS AREA SHOWN

FEC — FIRE EXTINGUISHER CABINET
FE — WALL-MOUNTED FIRE EXTINGUISHER
EXIT SIGN

CODE SYMBOLS
1/4" = 1'-0"

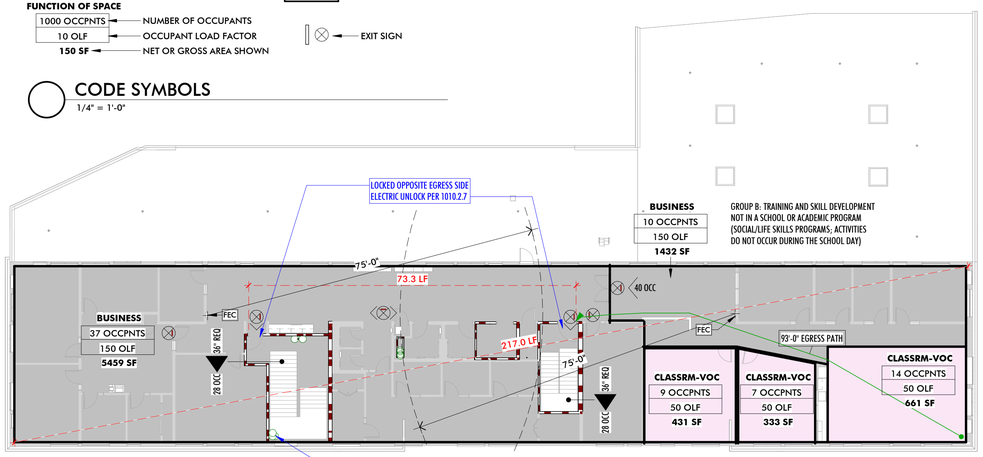

5 L03 LIFE SAFETY PLAN
1/16" = 1'-0"

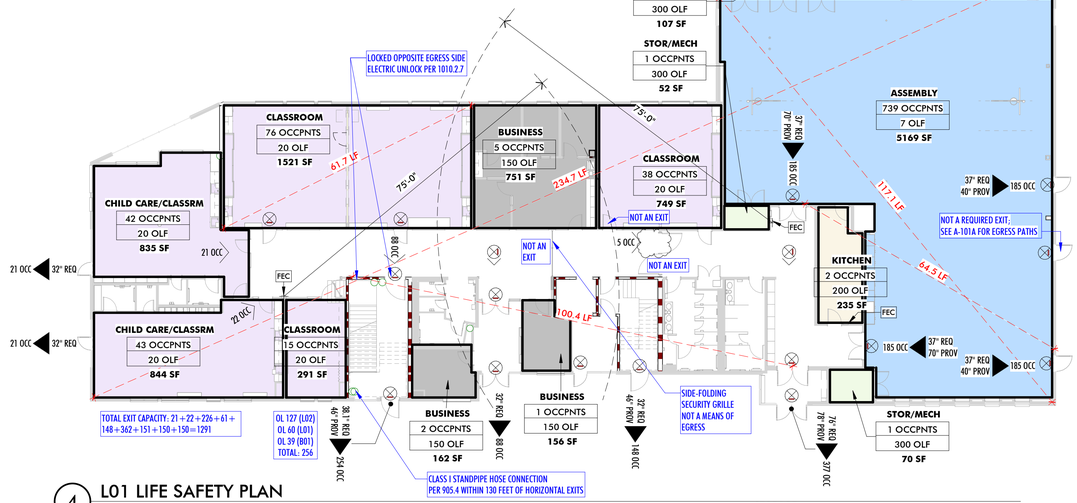

4 L01 LIFE SAFETY PLAN
1/16" = 1'-0"

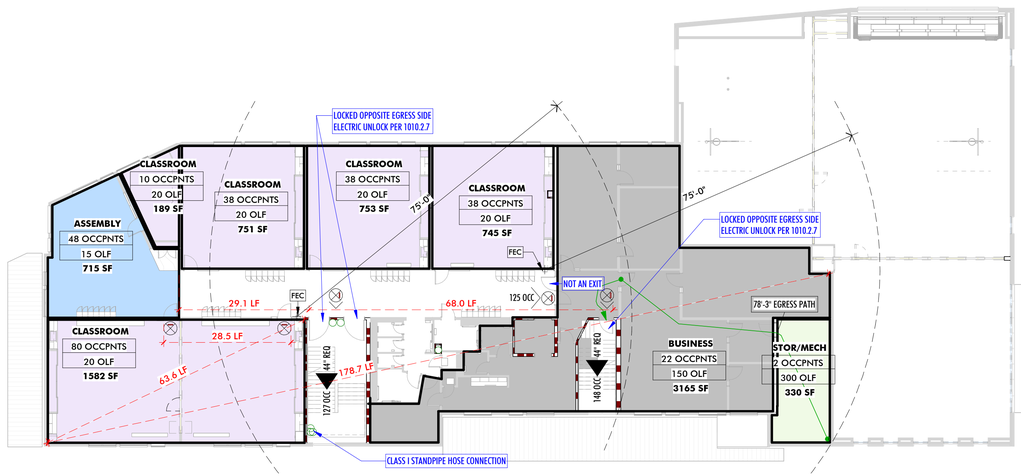

3 L02 LIFE SAFETY PLAN
1/16" = 1'-0"

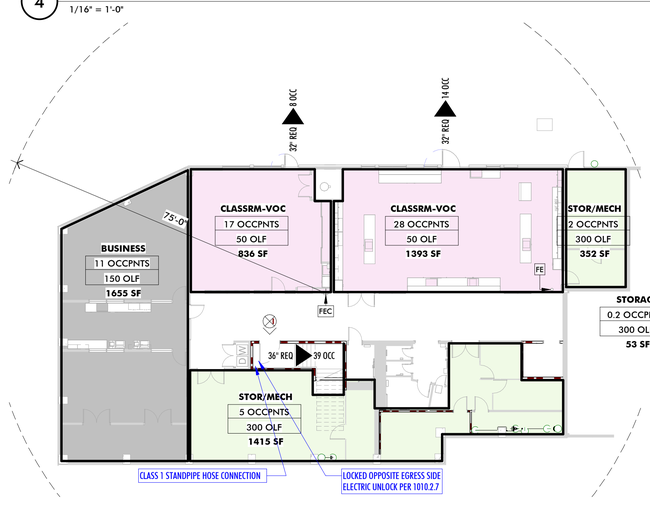

2 B01 LIFE SAFETY PLAN
1/16" = 1'-0"

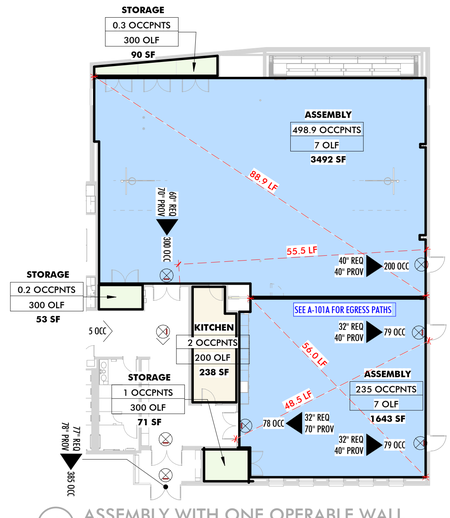

6 ASSEMBLY WITH ONE OPERABLE WALL
1/16" = 1'-0"

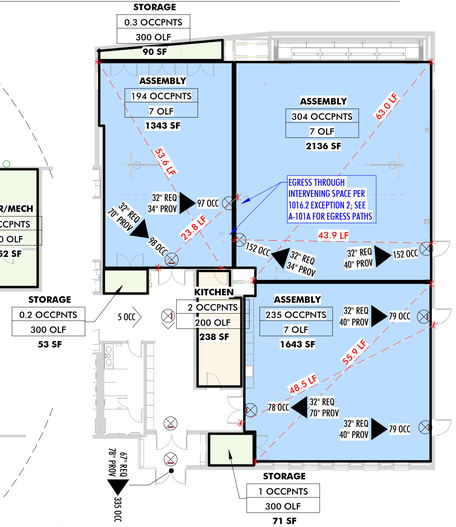

1 L01 ASSEMBLY WITH OPERABLE WALLS
1/16" = 1'-0"

3427 BEACON AVE S
SEATTLE 98144
ANJALI@AGRANTDESIGN.COM
206-512-4209
anjali grant design LLC

3700 E MERCER WAY
BARNABIE POINT PROJECT

NO.	DATE	DESCRIPTION
2	1/6/2026	BLDG PERMIT CORRECTIONS
1	10/22/2025	BLDG PERMIT CORRECTIONS

4 JUNE 2025
BUILDING PERMIT

PROJECT:

LIFE SAFETY PLANS

A-005

1/6/2026 3:51:41 PM D:\REVIT LOCAL\BPP_PSB_R24_CD_anjaliatlw.rvt
© ANJALI GRANT DESIGN LLC ORIGINAL SHEET SIZE: 24" X 36"

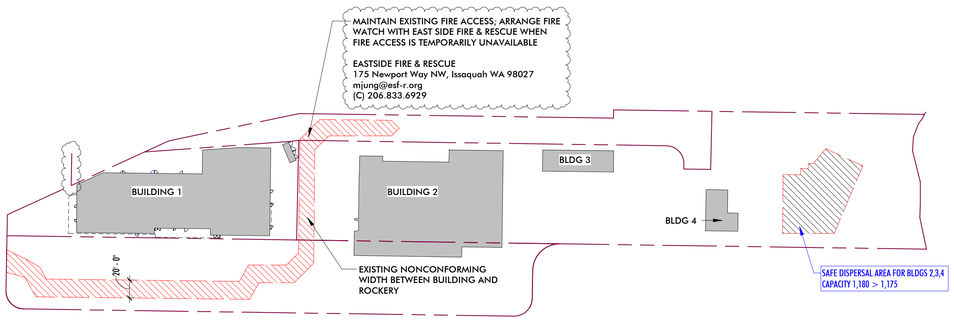

3 LIFE SAFETY SITE PLAN - CONSTRUCTION
1" = 80'-0"

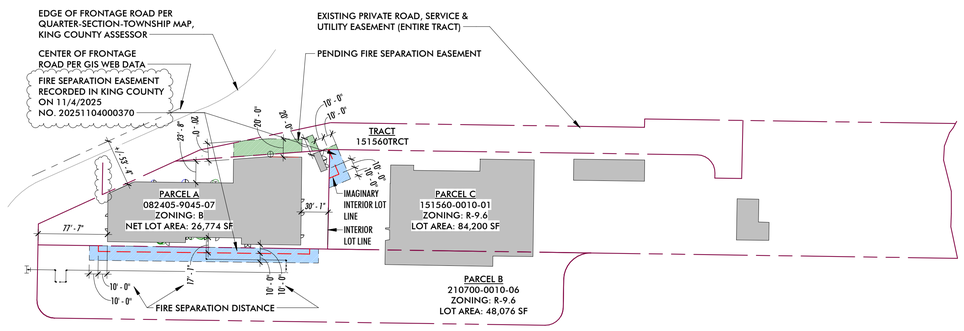

FIRE SEPARATION DISTANCE. The distance measured from the building face to one of the following:

1. The closest interior lot line.
2. To the centerline of a street, an alley or public way.
3. To an imaginary line between two buildings on the lot.

PUBLIC WAY. A street, alley or other parcel of land open to the outside air leading to a street, that has been deeded, dedicated or otherwise permanently appropriated to the public for public use and which has a clear width and height of not less than 10 feet.

2 FIRE SEPARATION DIAGRAM
1" = 80'-0"

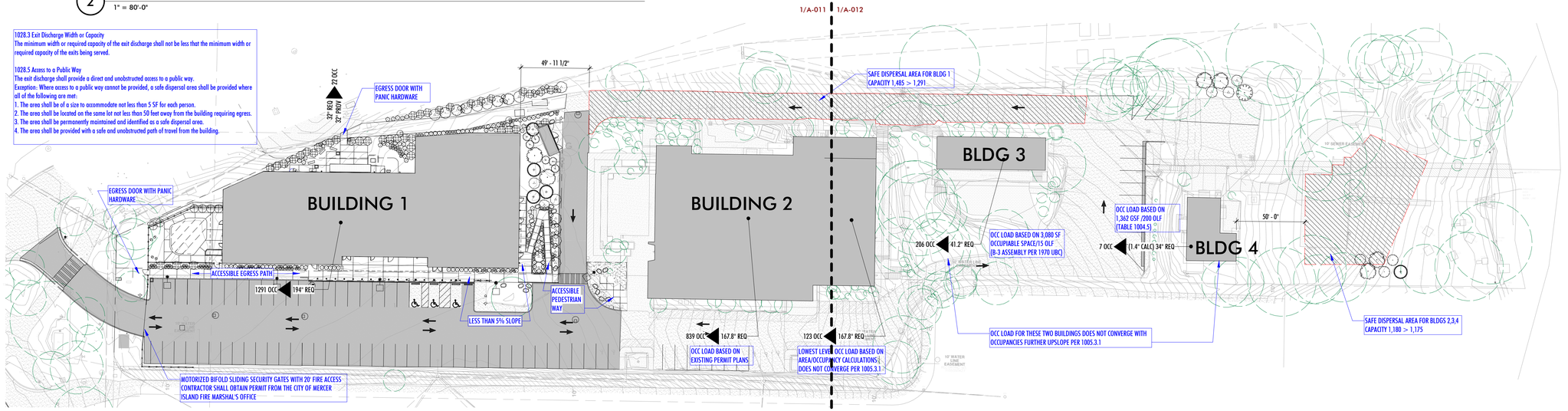

1 LIFE SAFETY SITE PLAN
1" = 40'-0"

3427 BEACON AVE S
SEATTLE 98144
ANJALI@AGRANTDESIGN.COM
206-512-4209

anjali grant design LLC

3700 E MERCER WAY
BARNABIE POINT PROJECT

NO.	DATE	DESCRIPTION
2	1/6/2026	BLDG PERMIT CORRECTIONS
1	10/22/2025	BLDG PERMIT CORRECTIONS

4 JUNE 2025
BUILDING PERMIT

PROJECT:

LIFE SAFETY SITE PLANS

A-006

1/6/2026 3:49:20 PM D:\REVIT LOCAL\BPP_PS8_R24_CD_anjaseattle.rvt
© ANJALI GRANT DESIGN LLC ORIGINAL SHEET SIZE: 24" X 36"

WINDOW AREA SCHEDULE		
	MARK	AREA
EAST	W1.2L	40 SF
EAST	W2.1L	80 SF
EAST	W4.2L	40 SF
		160 SF
NORTH	W1.1LL	84 SF
NORTH	W1.2L	361 SF
NORTH	W1.4L	45 SF
NORTH	W1L	46 SF
NORTH	W1LL	278 SF
NORTH	W2L	46 SF
NORTH	W3L	69 SF
NORTH	W4.1LL	63 SF
NORTH	W4.2L	100 SF
NORTH	W4L	69 SF
NORTH	W4LL	139 SF
NORTH	W5.1LL	42 SF
NORTH	W5.2L	361 SF
NORTH	W5L	46 SF
NORTH	W5LL	278 SF
NORTH	W6.1LL	21 SF
		2,049 SF
SOUTH	W1	185 SF
SOUTH	W1.2	281 SF
SOUTH	W1.3	126 SF
SOUTH	W2	139 SF
SOUTH	W2.1	160 SF
SOUTH	W2.2	84 SF
SOUTH	W2.3	43 SF
SOUTH	W3L	23 SF
SOUTH	W4	93 SF
SOUTH	W4.2	100 SF
SOUTH	W4.3	42 SF
SOUTH	W4.4	33 SF
SOUTH	W5.2	160 SF
SOUTH	W5.3	29 SF
		1,498 SF
WEST	W1.1L	42 SF
WEST	W1.2L	80 SF
WEST	W1L	93 SF
WEST	W4.1L	21 SF
WEST	W4.2L	40 SF
WEST	W4L	46 SF
WEST	W5.2L	40 SF
		362 SF
		4,070 SF

EXTERIOR STOREFRONT AREA SCHEDULE		
	MARK	Area
EAST	SF-5	62 SF
EAST	SF-8.1L	82 SF
EAST	SF-8L	290 SF
EAST	SF-9.1L	27 SF
EAST	SF-9.2L	78 SF
		540 SF
NORTH	SF-10L	173 SF
NORTH	SF-11LL	62 SF
NORTH	SF-12LL	33 SF
NORTH	SF-13L	202 SF
		470 SF
SOUTH	SF-1.1	36 SF
SOUTH	SF-1.2	50 SF
SOUTH	SF-2	83 SF
SOUTH	SF-3	92 SF
SOUTH	SF-4	58 SF
SOUTH	SF-6	103 SF
SOUTH	SF-7	249 SF
		670 SF
WEST	SF-9.1L	27 SF
WEST	SF-9.2L	39 SF
WEST	SF-14LL	106 SF
WEST	SF-15LL	108 SF
		279 SF
		1,960 SF

EXTERIOR WALL AREA SCHEDULE		
Comments	Type	AREA
EAST	CONCRETE WALL ASSEMBLY	869 SF
EAST	FRAMED WALL ASSEMBLY	2,928 SF
		3,797 SF
NORTH	CONCRETE WALL ASSEMBLY	596 SF
NORTH	FRAMED WALL ASSEMBLY	8,375 SF
		8,972 SF
SOUTH	CONCRETE WALL ASSEMBLY	1,347 SF
SOUTH	FRAMED WALL ASSEMBLY	7,552 SF
		8,899 SF
WEST	CONCRETE WALL ASSEMBLY	623 SF
WEST	FRAMED WALL ASSEMBLY	1,874 SF
		2,497 SF
		24,165 SF

WINDOW TO WALL AREAS:
EAST 18%
NORTH 27%
SOUTH 25%
WEST 26%

WALL AREA LEGEND

FRAMED WALL ASSEMBLY

CONCRETE WALL ASSEMBLY



11 AIR BARRIER DIAGRAM @ W-E SECTION
1/16" = 1'-0"



10 AIR BARRIER DIAGRAM @ N-S SECTION
1/16" = 1'-0"

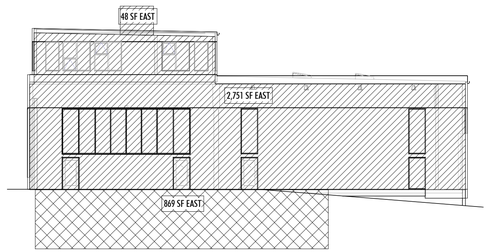

9 EAST ELEVATION ENVELOPE DIAGRAM
1/16" = 1'-0"



8 WEST ELEVATION ENVELOPE DIAGRAM
1/16" = 1'-0"

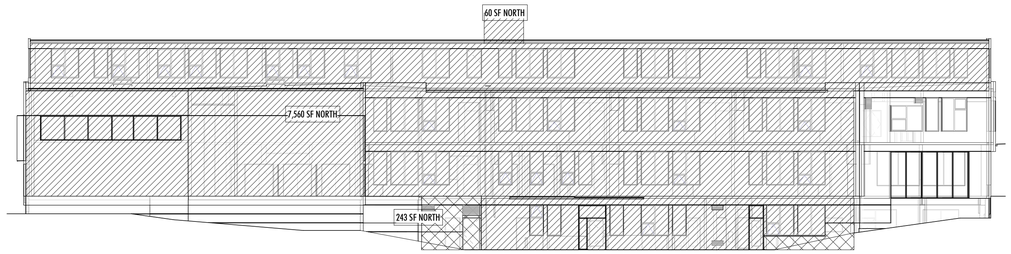

7 NORTH ELEVATION ENVELOPE DIAGRAM
1/16" = 1'-0"

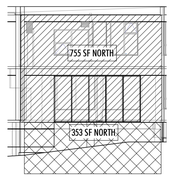

6 NW ELEVATION
1/16" = 1'-0"

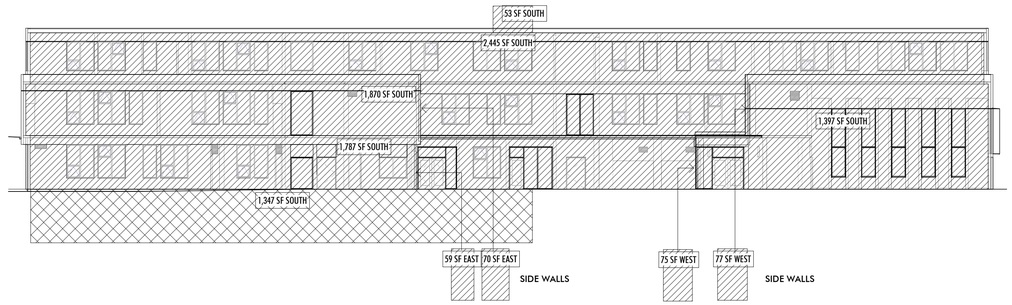

5 SOUTH ELEVATION ENVELOPE DIAGRAM
1/16" = 1'-0"

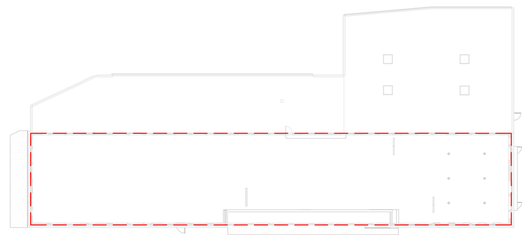

4 LEVEL 03 AIR BARRIER DIAGRAM
1/32" = 1'-0"

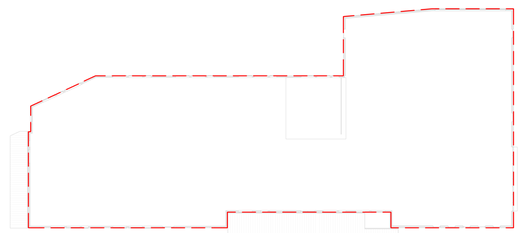

3 LEVEL 02 AIR BARRIER DIAGRAM
1/32" = 1'-0"

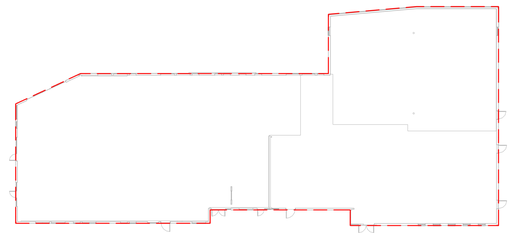

2 LEVEL 01 AIR BARRIER DIAGRAM
1/32" = 1'-0"

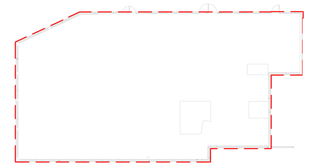

1 LEVEL B01 AIR BARRIER DIAGRAM
1/32" = 1'-0"

3427 BEACON AVE S
SEATTLE 98144
ANJALI@AGRANTDESIGN.COM
206-512-4209

anjali grant design LLC

3700 E MERCER WAY
BARNABIE POINT PROJECT

NO.	DATE	DESCRIPTION
	4 JUNE 2025	BUILDING PERMIT

PROJECT:

ENERGY CODE DIAGRAMS

A-007

12/12/2025 12:06:28 PM D:\REVIT LOCAL\BPP_PSB_R24_CD_anjaliwilla.rvt
© ANJALI GRANT DESIGN LLC ORIGINAL SHEET SIZE: 24" X 36"

BPP ENERGY CODE	
Code Section	Code Excerpt and Commentary
C103.2 Informatiotion on Construction Documents	Details shall include, but are not limited to, as applicable: 1. Energy compliance path per Section C401 or C501. 2. Insulation materials and their R-values. 3. Fenestration U-factors and SHGCs. 4. Area-weighted U-factor and SHGC calculations. 5. Mechanical system design criteria. (see M sheets) 6. Mechanical and service water heating system and equipment types, sizes and efficiencies. (see M sheets) 7. Economizer description. (see M sheets) 8. Equipment and systems controls. (see M sheets) 9. Fan motor horsepower (hp) and controls. (see M sheets) 10. Duct sealing, duct and pipe insulation and location. (see M sheets) 11. Lighting fixture schedule with wattage and control narrative. (see E sheets) 12. Location of daylight zones on floor plan. (see E sheets) 13. Air barrier details including all air barrier boundaries and associated square foot calculations on all six sides of the air barrier as applicable.
C401.2 Application	This project is complying with the Total Building Performance option, which requires compliance with Section C407.
C401.4 Thermal Envelope Certificate	A permanent thermal envelope certificate shall be completed by an approved party. Such certificate shall be posted on a wall in the space where the space conditioning equipment is located, a utility room or other approved location. If located on an electrical panel, the certificate shall not cover or obstruct the visibility of the circuit directory label, service disconnect label, or other required labels. A copy of the certificate shall also be included in the construction files for the project. The certificate shall include: 1. R-values of insulation installed in or on ceilings, roofs, walls, foundations and slabs, crawlspace walls and floors, and ducts outside conditioned spaces. 2. U-factors and solar heat gain coefficients (SHGC) of fenestration. 3. Results from any building envelope air leakage testing performed on the building. Where there is more than one value for any component of the building envelope, the certificate shall indicate the area-weighted average value where available. If the area-weighted average is not available, the certificate shall list each value that applies to 10 percent or more of the total component area.
C402.2.7 Airspaces	Where the R-value of an airspace is used for compliance in accordance with Section C401.2, the airspace shall be enclosed in an unventilated cavity constructed to minimize airflow into and out of the enclosed airspace. Airflow shall be deemed minimized where the enclosed airspace is located on the interior side of the continuous air barrier and is bounded on all sides by building components. EXCEPTION: The thermal resistance of airspaces located on the exterior side of the continuous air barrier and adjacent to and behind the exterior wall covering material shall be determined in accordance with ASTM C1363 modified with an airflow entering the bottom and exiting the top of the airspace at a minimum air movement rate of not less than 70 mm/sec.
C402.5.1.1 Air Barrier Construction	Construction documents shall contain a diagram showing the building's pressure boundary in plan(s) and section(s) and a calculation of the area of the pressure boundary to be considered in the test.
C402.5.3 Building Thermal Envelope Testing	The building thermal envelope shall be tested in accordance with ASTM E779, ANSI/RESNET/ICC 380, ASTM E3158 or ASTM E1827 or an equivalent method approved by the code official. The measured air leakage shall not exceed 0.25 cfm/ft2 (1.27 L/s × m2) of the building thermal envelope area at a pressure differential of 0.3 inch water gauge (75 Pa). Where the measured air leakage rate exceeds 0.25 cfm/ft2 (2.0 L/s x m2) corrective action shall be taken to seal leaks in the air barrier. Post-corrective action testing and repeated corrective action measures will be taken until the required air leakage rating is achieved. Final passing of the air leakage test results shall be submitted to the code official.
C402.5.9 Vestibules	All building entrances shall be protected with an enclosed vestibule, with all doors opening into and out of the vestibule equipped with self-closing devices. Vestibules shall be designed so that in passing through the vestibule it is not necessary for the interior and exterior doors to open at the same time. For the purposes of this section, "building entrances" shall include exit-only doors in buildings where separate doors for entering and exiting are provided. ... Interior and exterior doors shall have a minimum distance between them of not less than 7 feet. The exterior envelope of conditioned vestibules shall comply with the requirements for a conditioned space. EXCEPTION: Vestibules are not required for the following: 1. Doors not intended to be used as building entrances. 2. Doors between an enclosed space smaller than 3,000 square feet in area and the exterior of the building or the building entrance lobby, where those doors do not comprise one of the primary building entrance paths to the remainder of the building. The space must be enclosed and separated without transfer air paths from the primary building entrance paths. If there are doors between the space and the primary entrance path, then the doors shall be equipped with self-closing devices so the space acts as a vestibule for the primary building entrance.
C408.1 General	A building commissioning process led by a certified commissioning professional and functional testing requirements shall be completed for mechanical systems in Section C403; service water heating systems in Section C404; controlled receptacle and lighting control systems in Section C405; equipment, appliances and systems installed to comply with Sections C406 or C407; energy metering in Section C409; and refrigeration systems in Section C410. C408.1 General A building commissioning process led by a certified commissioning professional and functional testing requirements shall be completed for mechanical systems in Section C403; service water heating systems in Section C404; controlled receptacle and lighting control systems in Section C405; equipment, appliances and systems installed to comply with Sections C406 or C407; energy metering in Section C409; and refrigeration systems in Section C410. EXCEPTION: Buildings, or portions thereof, which are exempt from Sections C408.2 through C408.7 may be excluded from the commissioning process. 1. Mechanical systems that are not required to comply with Section C403.3.5 are exempt from the commissioning process where the installed total mechanical equipment capacity is less than 180,000 Btu/h (15 tons) cooling capacity and less than 240,000 Btu/h (20 tons) heating capacity and energy recovery ventilation (ERV) equipment is less than 300 cfm capacity. 2. Service water heating systems are exempt from the commissioning process in buildings where the largest service water heating system capacity is less than 200,000 Btu/h and where there are any of the following: 2. 1. No pools or permanent spas. 2.2. No solar thermal water heating. 2.3. No recirculation pumps. 2.4. No heat pump water heaters, except fully-packaged for individual residential dwelling unit use. 3. Lighting control systems are exempt from the commissioning process in buildings where both the total installed lighting load is less than 10 kW and the lighting load controlled by occupancy sensors or automatic daylighting controls is less than 5 kW. 4. Refrigeration systems are exempt from the commissioning process in buildings if they are limited to self-contained units.
C411.1 On-Site Renewable Energy	Each new building or addition larger than 10,000 square feet of gross conditioned floor area shall include a renewable energy generation system consisting of not less than 0.5 W/ft2 or 1.7 Btu/ft2 multiplied by the sum of the gross conditioned floor area.
WAC 51-50-0429 429.2 Electric vehicle (EV) charging infrastructure.	Buildings and accessory structures shall be provided with EV charging stations, EV-Ready parking spaces, and EV-capable parking spaces in accordance with Table 429.2. Calculations shall be rounded up to the nearest whole number. Where a building contains more than one occupancy, the electric vehicle charging infrastructure percentages of Table 429.2 shall be applied to the number of spaces required for each occupancy.
Table 429.2	10% of total parking spaces for RV Changing Stations, EV-Ready Parking Spaces and EV-Capable Parking Spaces Exception: Group A/Group E occupancies shall comply with either: 2.1. designated employee spaces; 2.2 one of each 200 spaces shall be EV-Ready, one shall be an EV charging station.
429.4 Electric vehicle charging infrastructure for accessible parking spaces.	Ten percent of the accessible parking spaces, rounded to the next whole number, shall be EV Charging Stations. Additional 10 percent of the accessible parking spaces, rounded to the next whole number, shall be EV Ready.
	Existing parking is shared. For the new building, code-required parking is computed as follows: 1. Office use: 33 x 75% = 25 (3) 2. School: 24 x 75% = 18 (1 per exception 2.2)
	Total: 4

12/12/2025 12:06:30 PM D:\REVIT LOCAL\BPP_PSB_R24_CD_anjaalittle.rvt
© ANJALI GRANT DESIGN LLC ORIGINAL SHEET SIZE: 24" X 36"

ENVELOPE NOTES

1. IDENTIFICATION MARK SHALL BE APPLIED TO ALL INSULATION MATERIALS AND INSULATION INSTALLED SUCH THAT THE MARK IS READILY OBSERVABLE DURING INSPECTION
2. STAGGER EDGE JOINTS BETWEEN LAYERS WHERE TWO OR MORE LAYERS OF RIGID INSULATION ARE USED.

FC-1
FIBER CEMENT PANEL

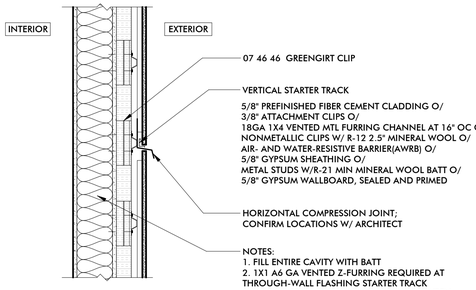

MTL-2
NU-WAVE EXPOSED FASTENER MTL CLADDING

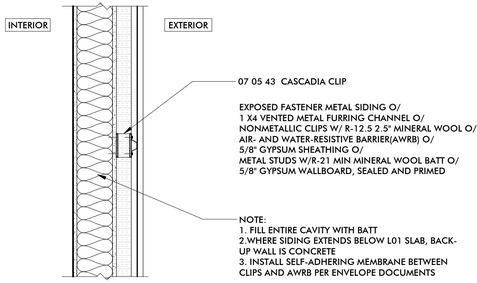

MTL-1
CONCEALED FASTENER MTL CLADDING

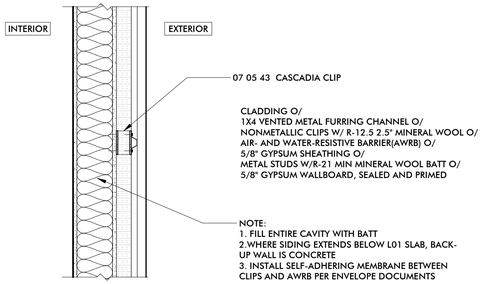

CONC-2
INSULATED CLAD CONCRETE WALL

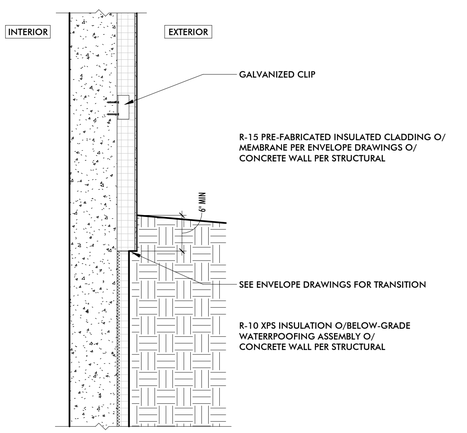

CONC-1
INSULATED BELOW-GRADE CONCRETE WALL

2 WALL ASSEMBLIES - ENVELOPE
1" = 1'-0"

R-3
METAL CANOPY

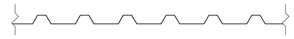

STRUCTURAL METAL ROOFING
O/ STRUCTURAL FRAMING
HIGH-PERFORMANCE COATING AT UNDERSIDE

R-2
MOD BIT CANOPY

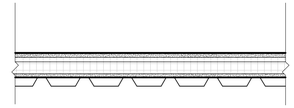

SBS-MODIFIED MEMBRANE ROOFING
O/ COVERBOARD
O/—R-31(5.5") MIN 25 PSI POLYISO RIGID INSULATION. INSTALL IN MULTIPLE LAYERS AND STAGGER JOINTS
O/ VAPOR BARRIER
O/ THERMAL BARRIER BOARD
O/ METAL DECKING PER STRUCTURAL

R-1
MOD BIT

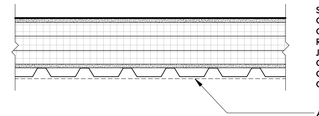

SBS-MODIFIED MEMBRANE ROOFING
O/ COVERBOARD
O/ R-20 MINIMUM + R-38 AVERAGE 25 PSI POLYISO RIGID INSULATION. INSTALL IN 3 LAYERS AND STAGGER JOINTS
O/ VAPOR BARRIER
O/ 5/8" THERMAL BARRIER BOARD
O/ METAL DECKING PER STRUCTURAL
ACOUSTICAL DECK AT GYM ROOF

FL-1
SLAB ON GRADE

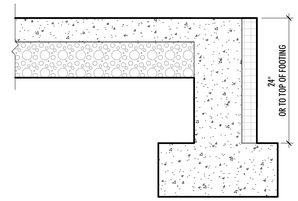

SLAB ON GRADE PER STRUCTURAL O/ GRAVEL
R-10 RIGID INSULATION AT PERIMETER

SOF-1
UNVENTED METAL—SOFFIT

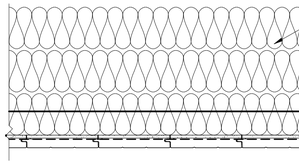

FILL ENTIRE VOID WITH BATT INSULATION
PREFINISHED METAL SOFFIT PANELS
O/ WATER-RESISTIVE BARRIER
O/ 1/2" GYPSUM SHEATHING
O/ 4" MTL FRAMING
O/ R-30 BATT INSULATION
FIRE RATING:0

1 HORIZONTAL ASSEMBLIES - ENVELOPE
1" = 1'-0"

3427 BEACON AVE S
SEATTLE 98144
ANJALI@AGRANTDESIGN.COM
206-512-4209
anjali grant design LLC

3700 E MERCER WAY
BARNABIE POINT PROJECT

NO.	DATE	DESCRIPTION
	4 JUNE 2025	BUILDING PERMIT

PROJECT:

ENVELOPE ASSEMBLIES

A-008

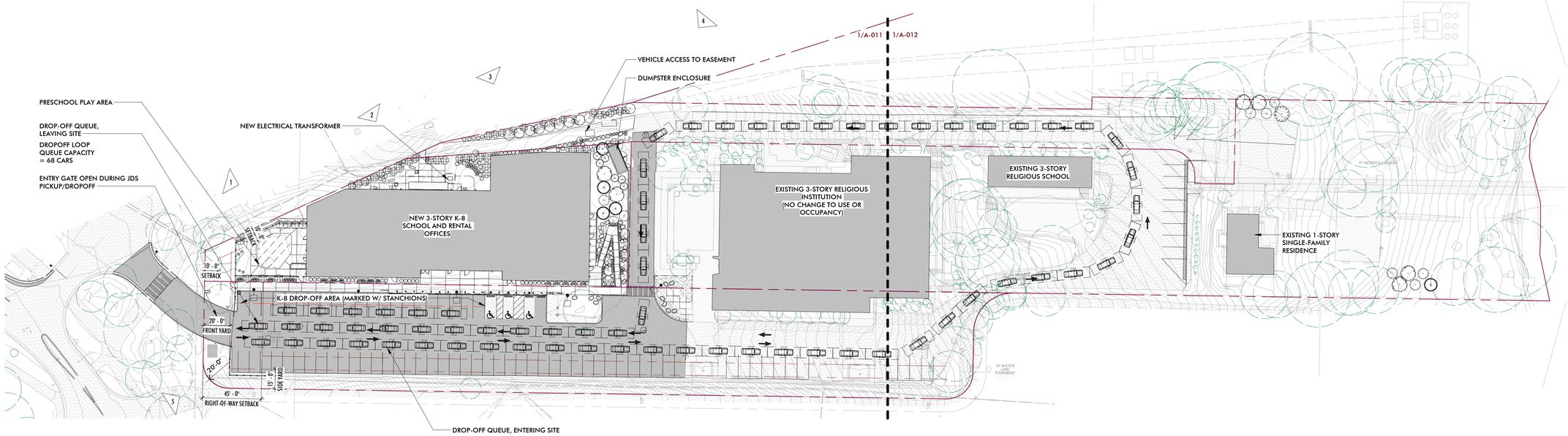

5 SITE PLAN-OVERALL

1" = 40'-0"

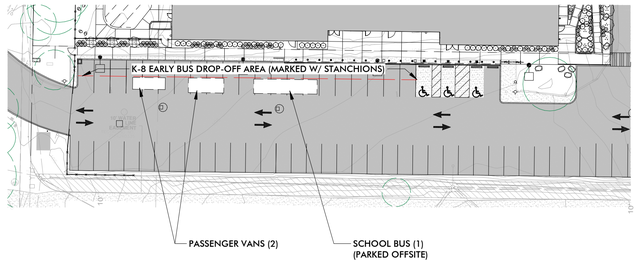

4 BUS DROP-OFF (PRIOR TO PARENT DROP-OFF)

1" = 40'-0"

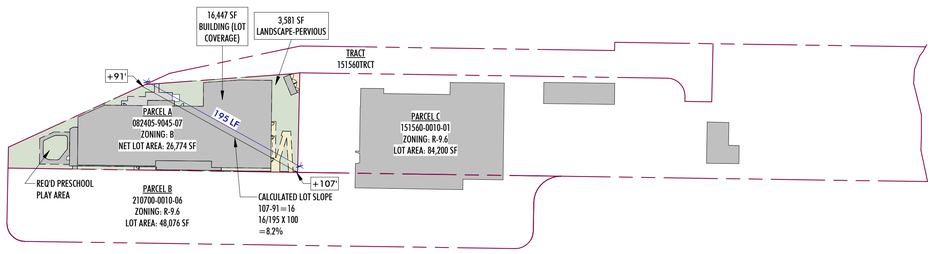

3 SITE DIAGRAM

1" = 80'-0"

MINIMUM LANDSCAPE REQUIREMENT FOR BUSINESS (B) ZONE - 25% OF GROSS LOT AREA.
LOT AREA: 26,881 SF
MINIMUM LANDSCAPE REQUIREMENT: 6,720 SF
19.12.040 B.4.B. IMPERVIOUS SURFACES. FOR ALL ZONES, AREA LANDSCAPED BY IMPERVIOUS SURFACES SHOULD CONSTITUTE NO MORE THAN 25 PERCENT OF THE TOTAL REQUIRED LANDSCAPE AREA 25% OF 6720 = 1,680 SF

BUILDING: A STRUCTURE HAVING A ROOF, BUT EXCLUDING TRAILERS, MOBILE HOMES, AND ALL OTHER FORMS OF VEHICLES EVEN THOUGH IMMOBILIZED. WHERE THIS CODE REQUIRES, OR WHERE SPECIAL AUTHORITY GRANTED PURSUANT TO THIS CODE REQUIRES THAT A USE SHALL BE ENTIRELY ENCLOSED WITHIN A BUILDING, THIS DEFINITION SHALL BE QUALIFIED BY ADDING "AND ENCLOSED ON ALL SIDES."

LOT AREAS (B-ZONED PARCEL)			
Comments	AREA	% OF TOTAL LOT AREA	COMMENTS
BUILDING (LOT COVERAGE)	16,447 SF	61%	
BUILDING (LOT COVERAGE)	1,325 SF	5%	INCLUDES AREAS COVERED BY CANOPY PER DEFINITION
	17,772 SF	66%	
LANDSCAPE-IMPERVIOUS	571 SF	2%	
LANDSCAPE-IMPERVIOUS	540 SF	2%	PART OF DCYF-REQUIRED PLAY AREA
LANDSCAPE-IMPERVIOUS	117 SF	0%	
LANDSCAPE-IMPERVIOUS	762 SF	3%	REQUIRED ACCESSIBLE ROUTE PER CITY OF MERCER ISLAND BLDG PLANS EXAMINER
	1,990 SF	7%	
LANDSCAPE-PERVIOUS	3,581 SF	13%	
LANDSCAPE-PERVIOUS	304 SF	1%	
LANDSCAPE-PERVIOUS	449 SF	2%	
LANDSCAPE-PERVIOUS	1,929 SF	7%	
LANDSCAPE-PERVIOUS	622 SF	2%	PERVIOUS PLAY SURFACING (ARTIFICAL TURF); PART OF DCYF-REQUIRED PLAY AREA
	6,885 SF	26%	
NOT LANDSCAPE	152 SF	1%	REQ'D BY RECOLOGY FOR TRASH LOADING
	152 SF	1%	
	26,799 SF	100%	

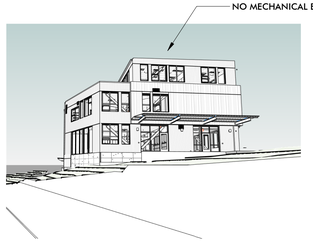

VIEW 1 FROM PUBLIC WAY

NOTE : CAMERA IS LOCATED 5.5' ABOVE FINISHED GRADE; EQUIPMENT ON LEVEL 3 IS SCREENED AS IT IS VISIBLE FROM THE WEST AND SOUTH (ACROSS THE PARKING LOT)

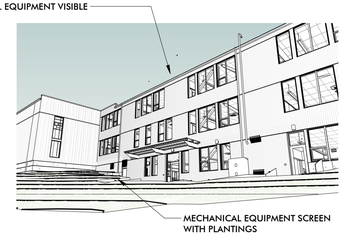

VIEW 2 FROM PUBLIC WAY

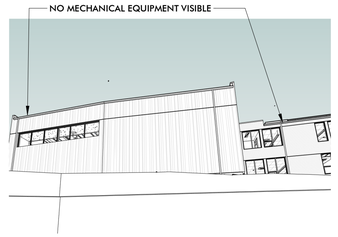

VIEW 3 FROM NORTH WALKWAY

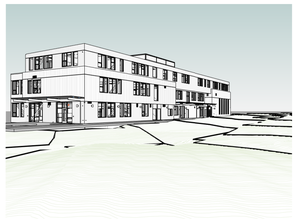

VIEW 5 FROM SOUTHWEST

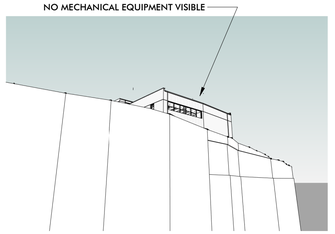

VIEW 4 FROM PUBLIC WAY

PROJECT NAME AND DESCRIPTION
BARNABIE POINT PROJECT
3-STORY MIXED-USE BUILDING HOUSING A PRESCHOOL-8 PRIVATE SCHOOL AND COMMUNITY MULTIPURPOSE SPACE ON LEVELS 0, 1 AND 2; AND COMMUNITY OFFICE RENTAL SPACE ON LEVELS 2 AND 3.

FILE NUMBER
CUP24-001

OWNER
HERZL-NER-TAMID CONSERVATIVE CONGREGATION

ADDRESS
3700 E MERCER WAY
MERCER ISLAND, WA 98040

ZONING DESIGNATION
B, R-9.6

LEGAL DESCRIPTION
PARCEL A: (APN 082405-9045-07)
THAT PORTION OF GOVERNMENT LOT 11, SECTION 8, TOWNSHIP 24 NORTH, RANGE 5 EAST, W.M., IN KING COUNTY, WASHINGTON; TOGETHER WITH THAT PORTION OF THE SOUTHEAST QUARTER OF SECTION 7, TOWNSHIP 24 NORTH, RANGE 5 EAST, W.M., IN KING COUNTY, WASHINGTON; DESCRIBED AS FOLLOWS:
BEGINNING AT THE INTERSECTION OF THE WEST LINE OF GOVERNMENT LOT 11 WITH THE NORTH LINE OF DOYLE-HANSEN ADDITION, ACCORDING TO THE PLAT THEREOF RECORDED IN VOLUME 75 OF PLATS, PAGE 24, RECORDS OF KING COUNTY, WASHINGTON;
THENCE SOUTH 89°09'34" EAST SLONG THE NORTH OF SAID DOYLE-HANSEN ADDITION, A DISTANCE OF 253.49 FEET TO THE WEST LINE OF LOT 7 OF CHANNEL CREST, ACCORDING TO THE PLAT THEREOF RECORDED IN COLUME 72 OF PLATS, PAGE 63, RECORDS OF KING COUNTY, WASHINGTON;
THENCE NORTH 01°12'29" EAST ALONG SAID WEST LINE, A DISTANCE OF 111.48 FEET TO THE SOUTH LINE OF TRACT "A" OF SAID CHANNEL CREST;
THENCE SOUTH 85°39'49" WEST ALONG SAID SOUTH LINE 173.15 FEET TO SOUTHEASTERLY LINE OF LAND CONVEYED TO STATE OF WASHINGTON TOLL BRIDGE AUTHORITY UNDER RECORDING NO. 3032009;
THENCE SOUTH 65°24'55" WEST ALONG SOUTHEASTERLY LINE TO THE EASTERLY MARGIN OF EAST MERCER WAY, AS CONVEYED TO KING COUNTY UNDER RECORDING NO. 923897;
THENCE SOUTH 01°02'29" WEST TO THE NORTH LINE OF SAID DOYLE-HANSEN ADDITION;
THENCE SOUTH 89°09'34" EAST ALONG SAID NORTH LINE 70.61FEET TO THE POINT OF BEGINNING.

PARCEL B: (APN 210700-0010-06)
LOTS 1 THROUGH 5, INCLUSIVE, DOYLE-HANSEN ADDITION, ACCORDING TO THE PLAT THEREOF RECORDED IN VOLUME 75 OF PLATS, PAGE 24, RECORDS OF KING COUNTY, WASHINGTON.

PARCEL C: (APN 151560-0010-06)
LOTS 1 THROUGH 7, INCLUSIVE, CHANNEL CREST, ACCORDING TO THE PLAT THEREOF RECORDED IN VOLUME 72 OF PLATS, PAGE 63, RECORDS OF KING COUNTY, WASHINGTON;

TOGETHER WITH AN UNDIVIDED 7/8THS INTEREST IN TRACT "A" OF SAID PLAT.

SITUATE IN THE COUNTY OF KING, STATE OF WASHINGTON.

ASSESSOR'S PARCEL NUMBER
0824059045, 1515600010, 2107000010, 151560TRCT

anjali grant design LLC
3427 BEACON AVE S
SEATTLE 98144
ANJALI@AGRANTDESIGN.COM
206-512-4209

3700 E MERCER WAY
BARNABIE POINT PROJECT

NO.	DATE	DESCRIPTION
	4 JUNE 2025	BUILDING PERMIT

PROJECT:

LAND USE/SITE PLAN

A-010

12/15/2025 2:30:42 PM D:\REVIT LOCAL BIP\P_PSB_RVT_CD_anjaliwillis.rvt
© ANJALI GRANT DESIGN LLC ORIGINAL SHEET SIZE: 24" X 36"

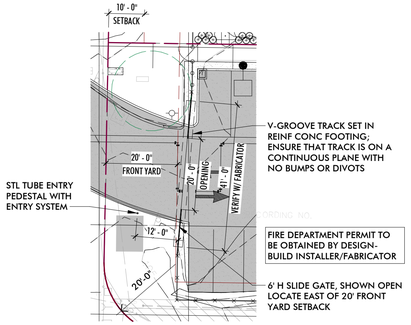

2 VEHICLE GATE
1" = 20'-0"

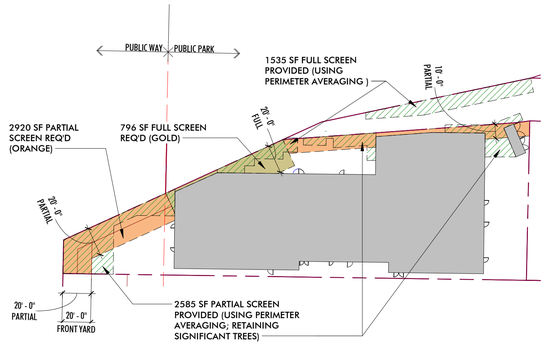

3 LANDSCAPE SCREENING DIAGRAM
1" = 50'-0"

MERCER ISLAND MUNICIPAL CODE
19.12.040 B.1.
LANDSCAPE AREA. LANDSCAPE DESIGN SHALL ADDRESS ALL AREAS OF A SITE NOT COVERED BY STRUCTURES OR USED BY AUTOMOBILES.

B.7.A. PERIMETER SCREEN TYPES AND WIDTHS BY USE AND LOCATION

INSTITUTIONAL USE ADJACENT TO PUBLIC WAY:	20 FEET PARTIAL
INSTITUTIONAL USE ADJACENT TO PUBLIC PARK:	20 FEET FULL
INSTITUTIONAL USE ADJACENT TO INSTITUTIONAL USE/UTILITY:	10 FEET PARTIAL

B.7.B. PERIMETER WIDTH AVERAGING. AVERAGING OF SCREEN WIDTHS MAY BE ALLOWED, IF THE OBJECTIVES OF THIS SECTION, THE MINIMUM LANDSCAPE AREA REQUIREMENTS SET FORTH IN MICC 19.12.040(B)(4) AND THE FOLLOWING CRITERIA ARE MET:
I. PLANT MATERIAL IS CLUSTERED TO MORE EFFECTIVELY SCREEN PARKING AREAS AND STRUCTURES; AND
II. SIGNIFICANT TREES ARE RETAINED.

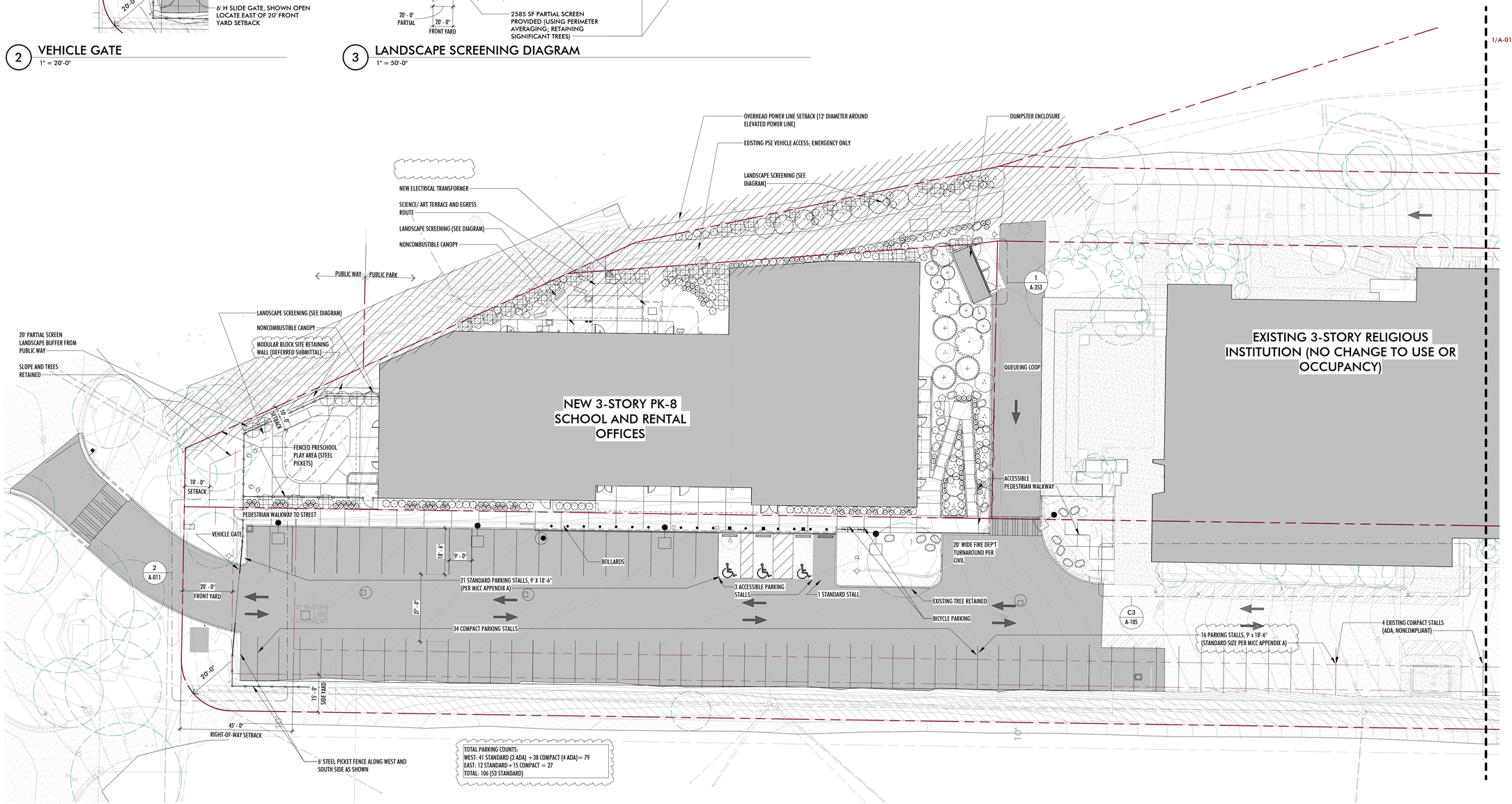

1 SITE PLAN-ENLARGED WEST
1" = 20'-0"

3427 BEACON AVE S
SEATTLE 98144
ANJALI@AGRANTDESIGN.COM
206-512-4209
anjali grant design LLC

3700 E MERCER WAY
BARNABIE POINT PROJECT

NO.	DATE	DESCRIPTION
2	1/6/2026	BLDG PERMIT CORRECTIONS
1	10/22/2025	BLDG PERMIT CORRECTIONS

4 JUNE 2025
BUILDING PERMIT

PROJECT:

SITE PLAN ENLARGED-WEST

A-011

10/2/2026 5:27:27 PM D:\REVIT LOCAL\BPP_PS&I_ROJ_CFD_anjaliwilliz.rvt
© ANJALI GRANT DESIGN LLC ORIGINAL SHEET SIZE: 24"X 36"

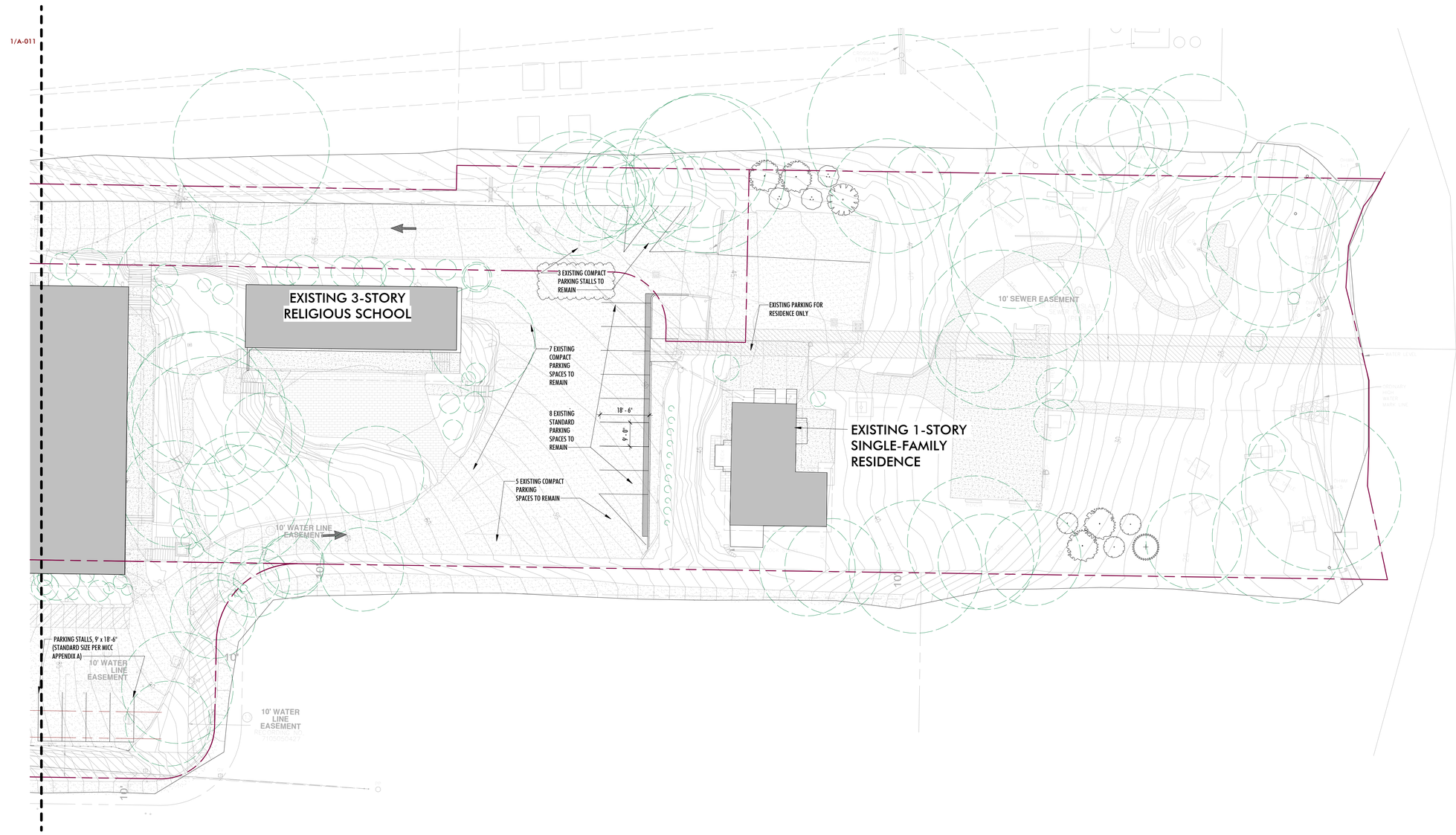

1 SITE PLAN-ENLARGED EAST
1" = 20'-0"

3427 BEACON AVE S
SEATTLE 98144
ANJALI@AGRANTDESIGN.COM
206-512-4209

anjali grant design LLC

3700 E MERCER WAY
BARNABIE POINT PROJECT

NO.	DATE	DESCRIPTION
1	1/6/2026	BLDG PERMIT CORRECTIONS

4 JUNE 2025
BUILDING PERMIT

PROJECT:

SITE PLAN ENLARGED-EAST

A-012

1/6/2026 5:28:04 PM D:\REVIT LOCAL\BIPP_PS8_R24_CD_anjaleattlen.rvt
© ANJALI GRANT DESIGN LLC ORIGINAL SHEET SIZE: 24" X 36"

CONDITIONAL USE PERMIT CUP24-001 AND DESIGN REVIEW DSR25-009 CONDITIONS OF APPROVAL

CONDITION OF THE CONDITIONAL USE PERMIT	CONDITION OF DESIGN REVIEW	COMMENT
1. The project shall be in substantial conformance with Exhibit 10 and all applicable development standards...	1. The project shall be in substantial conformance with (Exhibit 3) and all applicable development standards...	Project shall comply.
2. The Permittee shall obtain any permits from state and federal agencies that are applicable to this project. The Permittee is also responsible for documenting any...	2. The Applicant shall obtain any permits from state and federal agencies that are applicable to this project. The Applicant is also responsible for documenting any...	
3. The Permittee shall apply for and obtain all required City of Mercer Island permits, including but not limite...	3. The Applicant shall apply for and obtain all required City of Mercer...	
4. Construction of this project proposal shall only occur during approved construction hours by the City of...	4. Construction of this project proposal shall only occur during approved construction hours by the City of...	
5. The Revised Mitigated Determination of Nonsignificance ("RMDNS") for SEP24-003, as amended through the companion appeal process,...	5. The Mitigated Determination of Non-Significance (MDNS) for SEP24-003, modified by the Hearing Examiner ruling in Exhibit 8, includes the following...	
5-1. Provide a left turn lane from southbound East Mercer Way to the Frontage Road serving the site. The turn lane length shall be designed to accommodate left turn demand during the AM and PM peak hour, and during site peak if it does not coincide with the AM and/or PM peak hour. Where the Washington State Department of Transportation (WSDOT) has permitting authority over the right-of-way, the widths of all lanes of East Mercer Way shall comply with Washington State Department of Transportation ("WSDOT") standards and procedures (including, without limitation, standards and procedures for deviations). The applicant shall apply for and obtain all necessary approvals that WSDOT may require. To the extent any improvements are within solely City right-of-way (not subject to WSDOT authority, design or otherwise), the widths of all lanes of East Mercer Way shall comply with applicable American Association of State Highway and Transportation Officials ("AASHTO") standards....	a. [1] Provide a left turn lane from southbound East Mercer Way to the Frontage Road serving the site. The turn lane length shall be designed to accommodate left turn demand during the AM and PM peak hour, and during site peak if it does not coincide with the AM and/or PM peak hour. Where the Washington State Department of Transportation (WSDOT) has permitting authority over the right-of-way, the widths of all lanes of East Mercer Way shall comply with Washington State Department of Transportation ("WSDOT") standards and procedures (including, without limitation, standards and procedures for deviations). The Applicant shall apply for and obtain all necessary approvals that WSDOT may require. To the extent any improvements are within solely City right-of-way (not subject to WSDOT authority, design or otherwise), the widths of all lanes of East Mercer Way shall comply with applicable American Association of State Highway and Transportation Officials ("AASHTO") standards....	Design of the left turn lane has commenced. Turn lane will be installed to comply with conditions.
5-2. The addition of the southbound left turn lane may reduce the length of adjacent northbound left turn lane at the SE 36th Street/East Mercer Way intersection. Verify with a traffic operations analysis that, with the addition of the southbound left turn lane to the...	b. [2] The addition of the southbound left turn lane may reduce the length of adjacent northbound left turn lane at the SE 36th Street/East Mercer Way intersection. Verify with a traffic operations analysis that, with the addition of the southbound left turn lane to the...	
3. The left turn lane from southbound East Mercer Way to the Frontage Road serving the site may consequently require narrowing of the northbound lane on East Mercer Way, especially as approaching the Frontage Road serving the site. Confirm adequacy of curb radii for right turning vehicles exiting from the Frontage Road onto northbound East Mercer Way based on lane widt...	c. [3] The left turn lane from southbound East Mercer Way to the Frontage Road serving the site may consequently require narrowing of the northbound lane on East Mercer Way, especially as approaching the Frontage Road serving the site. Confirm adequacy of curb radii for right turning vehicles exiting from the Frontage Road onto northbound East Mercer Way bas...	
4. The Transportation Impact Analysis states that the school bus unloading/loading will occur at the east end of the school. The site plan and circulation plan do not show the location of the bus loading zone or walkways along the east side of the building for students to access the bus loading zone. Revise the site plan and circulation plan to show the bus loading zone and how students will safely access the bus loading zone. Pare...	d. [4] The Transportation Impact Analysis states that the school bus unloading/loading will occur at the east end of the school. The site plan and circulation plan do not show the location of the bus loading zone or walkways along the east side of the building for students to access the bus loading zone. Revise the site plan and circulation plan to show the bus loading zone and how students will safely access the bus loading zone. Pare...	Site plan diagram 4/A-010 has been added to demonstrate school bus loading and unloading.
6. The proposed 25 percent reduction in required 139 parking spaces under MICC 19.04.040(E) shall be reviewed and approved by the Hearing Examiner and city engineer during design review, prior to the issuance of construction authorization. The Permittee shall provide documentation demonstrating that the reduction in parking spaces will not have adverse impacts. If the Hearing Examiner and/or city engineer finds that the reduction in parking spaces will have adverse impacts: A minimum of 105 parking spaces shall be available on-site. The Permittee shall provide an additional 34 parking spaces for a total of 139 parking spaces. The parking spaces shall be located on parcel numbers 1515600010, 2107000010, 151560TRCT, and 0824059045, unless the Permittee demonstrates that...		Space does not allow for additional parking. Hearing Examiner has approved a 25 percent reduction in required parking spaces; a parking agreement will be provided prior to the issuance of the Certificate of Occupancy.

CONDITION OF THE CONDITIONAL USE PERMIT	CONDITION OF DESIGN REVIEW	COMMENT
7. The Permittee shall provide a Transportation Demand Management Plan (TDMP) prior to issuance of construction authorization which...	6. The Applicant shall provide a Transportation Demand Management Plan (TDMP) prior to issuance of construction...	Transportation Demand Management Plan is included in this application.
a. The parking capacity for each use and the time periods for which each parking space or section is authorized for the school, place of worship, and office uses. Each use shall have access to at least the following number of parking spaces during the time periods established for operation:...	a. The parking capacity for each use and the time periods for which each parking space or section is authorized for the school, place of worship, and office uses. Each use shall have access to at least the following number of parking spaces during the time periods established for operation:...	Owner will comply with these requirements.
b. The school and offices on parcel number 0824059045 shall not schedule overlapping even...	b. The school and offices on parcel number 0824059045 shall not schedule overlapping even...	
c. If parking areas are not available during construction, a temporary parking plan must be submitted to the City for each phase of constructi...	b. The school and offices on parcel number 0824059045 shall not schedule overlapping events with the existing uses on parcel numbers...	
d. If an event is expected to draw visitors in excess of the number of on-site parking spaces, Herzl-Ner Tamid Conservative Congregation or office space occupant/lessee shall make arrangements to procure off-site parking and provide a shuttle or...	d. If an event is expected to draw visitors in excess of the number of on-site parking spaces, Herzl-Ner Tamid Conservative Congregation or office space occupant/lessee shall make arrangements to procure off-site parking and provide a shuttle or...	
e. If the City receives complaints regarding parking associated with the Herzl-Ner Tamid Conservative Congregation school, place of worship, or office uses and determines the parking results in adverse impacts to the surrounding neighborhood, including impacts to public safety, the City shall require that all vehicle parking be accommodated on-site...	e. If the City receives complaints regarding parking associated with the Herzl-Ner Tamid Conservative Congregation school, place of worship, or office uses and determines the parking results in adverse impacts to the surrounding neighborhood, including impacts to public safety, the City shall require that all vehicle parking be accommodated on-site...	
f. If student drop-off and pick-up activities create congestion on any City streets, the City reserves the right to install "No Parking During School Days"...	f. If student drop-off and pick-up activities create congestion on any City streets, the City reserves the right to install "No Parking During School Days"...	
g. The programming for each use. i. Days and hours of each use. ii. Description of activities and associated parking demand. iii. Description of events that will likely exceed available parking....	g. The programming for each use. i. Days and hours of each use. ii. Description of activities and associated parking demand. iii. Description of events that will likely exceed available parking....	
h. A Transportation Coordinator shall be identified to implement the TDMP including: i. Communications with each facility manager, neighbors, and the City related to traffic and parking management on the site. ii. Responding to concerns related to traffic and parking impacts on the neighborhood....	h. A Transportation Coordinator shall be identified to implement the TDMP including: i. Communications with each facility manager, neighbors, and the City related to traffic and parking management on the site. ii. Responding to concerns related to traffic and parking impacts on the neighborhood....	The Transportation Coordinator has been identified as Melanie Miller, who can be contacted at melaniem@h-nt.org or (206) 232-8555.
i. Within one month from the date of this approval, the Permittee shall notify, by letter or postcard, all neighbors living within 300 feet of the school, with the name and contact information of the individual they have identified as the Transportation...	i. Within one month from the date of this approval, the Permittee shall notify, by letter or postcard, all neighbors living within 300 feet of the school, with the name and contact information of the individual they have identified as the Transportation...	Postcards were mailed out on 12/19/2025.
j. Identification of strategies and implementation of programs and policies to encourage ridesharing (carpooling/vanpooling), off-site parking and...	j. Identification of strategies and implementation of programs and policies to encourage ridesharing (carpooling/vanpooling), off-site parking and...	Owner will comply with these requirements.
k. Measures to mitigate unexpected traffic and parking impacts associated with activities and...	k. Measures to mitigate unexpected traffic and parking impacts associated with activities and...	
l. Plans to educate school students, parents, staff, visitors, and office space occupants to abide by posted speed limits on the Island and practice safe driving practices as travel to and from the...	l. Plans to educate school students, parents, staff, visitors, and office space occupants to abide by posted speed limits on the Island and practice safe driving practices as travel to and from the...	
8. The Transportation Demand Management Plan shall be submitted to the City's Community...	7. The Transportation Demand Management Plan shall be submitted to the City's Community...	
9. The six-foot-tall fence proposed within the access easement on 151560TRCT is not allowed pursuant to MICC 19.02.020(H)(1), unless the Permittee...	8. The six-foot-tall fence proposed within the access easement on 151560TRCT is not allowed pursuant to MICC 19.02.020(H)(1), unless the Permittee...	This fence has been removed from the current building permit. Owner will obtain permission from joint...
10. The six-foot-tall fence proposed within the front yard setback of parcel number 2107000010 shall be relocated to be outside of the required 20-foot...		Fence has been relocated to be outside the required front yard.
11. The proposed development shall not result in an increase in impervious surfaces on the residentially zoned parcels. New impervious...	9. The proposed development shall not result in an increase in impervious surfaces on the residentially zoned parcels. New impervious surfaces shall be...	New impervious surfaces have been offset by removed impervious surfaces. Please see civil drawings...

CONDITION OF DESIGN REVIEW	COMMENT
10. Pursuant to MICC 19.04.040(B)(1), all off-street parking areas shall be graded and surfaced to a standard comparable to the street which serves the parking area. The parking area shall be developed and completed to the required standards before an occupancy perm...	New off-street parking areas have been graded and surfaced. Existing off-street parking areas have not been re-graded per MICC 19.01.050.
11. Pursuant to MICC 19.04.040(B)(2), all traffic control devices such as parking strips designating car stalls, directional arrows or signs, bull rails, curbs and other structures shall be installed and completed as shown on the approved plans. Hard surfaced parking area shall...	Traffic control devices shall be installed and completed as shown.
12. Pursuant to MICC 19.04.040(B)(6), off-street parking shall meet the relevant state design standards for the physically disabled.	New off-street parking areas shall meet the relevant state design standards. Existing ADA parking spaces have not been upgraded per...
13. Pursuant to MICC 19.04.050(B)(26), the preschool facility shall meet all applicable safety and licensing laws and requirements prior to issuance of construction authorization. ...	Project shall comply.
14. Pursuant to MICC 19.10.070(B)(2), replacement trees shall primarily be those species native to the Pacific Northwest. In making a determination regarding the species of replacement trees, the city arborist shall defer to the species selected by the property owner unless the city arborist determines that the species selected is unlikely to survive for a period of at least ten years, represents a danger or nuisance, would threaten overhead or underground utilities or woul...	Project shall comply.
15. Pursuant to MICC 19.10.070(B)(3), coniferous trees shall be at least six feet tall; and deciduous trees shall be at least one and one-half inches in caliper. The city arborist may authorize the planting of smaller-sized replacement trees if the Applicant can demonstrate that smaller trees are more suited to the species, the site conditions, neighborhood character, and the purposes of this section, and that such replacement trees will be planted in sufficient quantities to meet the intent of this section. The city arborist shall not authorize the...	Project shall comply.
16. Pursuant to MICC 19.10.070(B)(5), replacement trees shall be planted in the wet season (October 1 through April 1), following the applicable tree removal or, in the case of a development proposal, completion of the development work, provided the city arborist may authorize an extension to ensur...	Project shall comply.
17. Pursuant to MICC 19.10.070(D), the Applicant shall maintain all replacement trees in a healthy condition for a period of five years after planting. The Applicant shall be obligated to replant any replacement tree that dies, becomes...	Owner shall comply.
18. Pursuant to MICC 19.10.080(A), to ensure long-term viability of trees identified for protection, permit plans and construction activities shall comply with the then-existing best management practices (BMP) — managing trees during construction, published by the Internation...	Project shall comply.
19. Pursuant to MICC 19.12.010(G), it is the property owners' and tenants' responsibility to ensure compliance with applicable development regulations when a change of use and/or a tenant...	Owner shall comply.
20. Pursuant to MICC 19.12.040(B)(6), native or northwest-adapted plants should be used for all open space and buffer locations and drought tolerant plantings should be used in a majority of plantings. New plantings should complement existing species native to the Pacific Northwest. Ground cover should be planted and spaced to...	Project shall comply.
21. Pursuant to MICC 19.12.040(B)(8)(a) and (b), a full screen should block views from adjacent properties as seen at the pedestrian eye level in all seasons within three years of installation. A partial screen shall provide the desired screening function as seen at the pedestrian eye level in all seasons within three years of installation. Documentation that the approved screening meets these requirements is required to be submitted to Community Planning &...	Owner shall comply.
22. Pursuant to MICC 19.12.040(B)(10), graded slopes in planting areas should not exceed a 3(Horizontal): 1(Vertical) slope, in order to decrease erosion potential and to facilitate maintenance. Graded slopes planted with grass should not exceed a 4(H): 1(V) slope. On ungraded slopes equal to or greater than 2(H): 1(V), erosion control netting or alternative procedures shall be used to prevent erosion. The obligation to install plants, shrubs and ground cover includes the obligation to utilize soil, planting practices and irrigation equipment...	Project shall comply.
23. Pursuant to MICC 19.12.040(B)(11)(h), planting areas shall be...	Project shall comply.
24. All required landscaping shall be maintained in good condition. Plant material should be cared for in a way that allows their natural form to be maintained, even when the plant reaches maturity. A performance guarantee shall be required for the installation maintenance of landscaping and replacement trees. The performan...	Owner shall comply.
25. Pursuant to MICC 19.10.070(C), the Hearing Examiner, acting as the city arborist, may authorize a fee-in-lieu if there is insufficient area to replant on-site or within adjacent public right-of-way. The Hearing Examiner finds that there is sufficient area to replant 34 trees on-site or within adjacent public right-of-way.A fee-in-lieu may be...	Noted.
26. Chain link fencing is authorized along adjoining PSE property. However, any portions of the fence visible to public right of way shall be substituted or hidden by fencing that composed of materials...	Project shall comply.

3427 BEACON AVE S
SEATTLE 98144
ANJALI@AGRANTDESIGN.COM
206-512-4209

anjali grant design LLC

3700 E MERCER WAY
BARNABIE POINT PROJECT

NO.	DATE	DESCRIPTION
2	1/6/2026	BLDG PERMIT CORRECTIONS
1	10/22/2025	BLDG PERMIT CORRECTIONS

4 JUNE 2025

BUILDING PERMIT

PROJECT:

DESIGN REVIEW AND CONDITIONAL USE PERMITS

A-013

1/6/2026 12:06:21 PM D:\REVIT LOCAL\BPP_PSB_R24_CD_anjaliwillm.rvt
© ANJALI GRANT DESIGN LLC ORIGINAL SHEET SIZE: 24" X 36"

CONTROL DIAGRAM
(1" = 50')

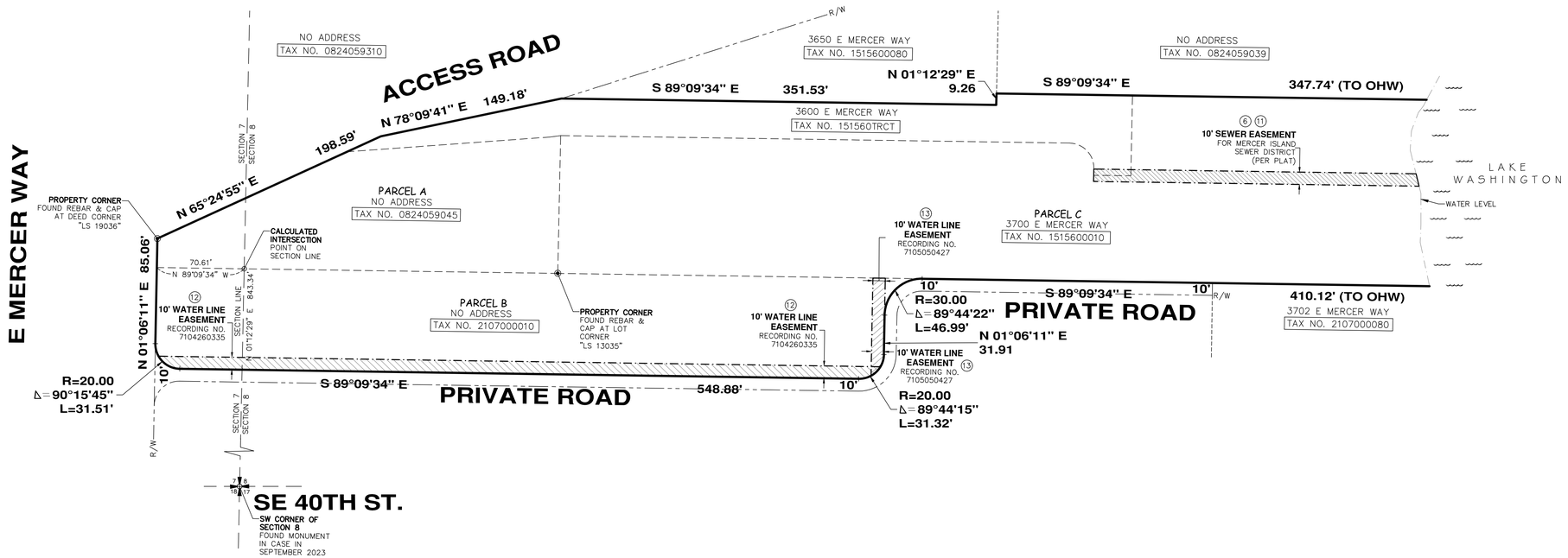

NORTH

SCALE: 1" = 50'

0 25 50 100

NOTES:

1. THIS SURVEY WAS PERFORMED BY FIELD TRAVERSE USING A 10 SECOND "TOTAL STATION". THIS SURVEY MEETS OR EXCEEDS THE STANDARDS FOR LAND BOUNDARY SURVEYS AS SET FORTH IN WAC CHAPTER 332-130-090.
2. CONTOUR INTERVAL = 1 FT.
3. VERTICAL DATUM = NAVD'88, AS PER DIRECT OBSERVATIONS USING GPS EQUIPMENT ON SEPTEMBER 14TH, 2023.
4. HORIZONTAL DATUM = NAD 83/11 (EPOCH 2010).
5. COMBINED UPLAND PARCEL AREA = 180,686 FT².
6. THIS SURVEY WAS PERFORMED WITHOUT THE BENEFIT OF A CURRENT TITLE REPORT. THEREFORE EASEMENTS AFFECTING THE PROPERTY, IF ANY, ARE NOT SHOWN HEREON.
7. TREES AS SHOW HEREON HAVE BEEN MAPPED TO THE BEST OF OUR ABILITY DURING THE COURSE OF THIS SURVEY. HOWEVER, ALL ONSITE TREES THAT COULD AFFECT PROJECT DEVELOPMENT MAY NOT BE SHOWN. THEREFORE, PRIOR TO DESIGN A CERTIFIED ARBORIST SHOULD BE CONSULTED TO VERIFY THE SPECIFIC GENUS, TRUNK DIAMETER, DRIP LINE, LOCATION AND NUMBER OF QUALIFYING TREES UPON THIS SITE.

DEED DESCRIPTIONS:

PARCEL A: (TAX PARCEL NO. 082405-9045-07)

THAT PORTION OF GOVERNMENT LOT 11, SECTION 8, TOWNSHIP 24 NORTH, RANGE 5 EAST, W.M., IN KING COUNTY, WASHINGTON; TOGETHER WITH THAT PORTION OF THE SOUTHEAST QUARTER OF SECTION 7, TOWNSHIP 24 NORTH, RANGE 5 EAST, W.M., IN KING COUNTY, WASHINGTON, DESCRIBED AS FOLLOWS:
BEGINNING AT THE INTERSECTION OF THE WEST LINE OF GOVERNMENT LOT 11 WITH THE NORTH LINE OF DOYLE-HANSEN ADDITION, ACCORDING TO THE PLAT THEREOF RECORDED IN VOLUME 75 OF PLATS, PAGE 24, RECORDS OF KING COUNTY, WASHINGTON; THENCE SOUTH 89°09'34" EAST ALONG THE NORTH OF SAID DOYLE-HANSEN ADDITION, A DISTANCE OF 253.49 FEET TO THE WEST LINE OF LOT 7 OF CHANNEL CREST, ACCORDING TO THE PLAT THEREOF RECORDED IN VOLUME 72 OF PLATS, PAGE 63, RECORDS OF KING COUNTY, WASHINGTON;
THENCE NORTH 01°12'29" EAST ALONG SAID WEST LINE, A DISTANCE OF 111.48 FEET TO THE SOUTH LINE OF TRACT "A" OF SAID CHANNEL CREST;
THENCE SOUTH 85°39'49" WEST ALONG SAID SOUTH LINE 173.15 FEET TO SOUTHEASTERLY LINE OF LAND CONVEYED TO STATE OF WASHINGTON TOLL BRIDGE AUTHORITY UNDER RECORDING NO. 3032009; THENCE SOUTH 65°24'55" WEST ALONG SAID SOUTHEASTERLY LINE TO THE EASTERLY MARGIN OF EAST MERCER WAY, AS CONVEYED TO KING COUNTY UNDER RECORDING NO. 923897;
THENCE SOUTH 01°02'29" WEST TO THE NORTH LINE OF SAID DOYLE-HANSEN ADDITION; THENCE SOUTH 89°09'34" EAST ALONG SAID NORTH LINE 70.61 FEET TO THE POINT OF BEGINNING.

PARCEL B: (TAX PARCEL NO. 210700-0010-06)

LOTS 1 THROUGH 5, INCLUSIVE, DOYLE-HANSEN ADDITION, ACCORDING TO THE PLAT THEREOF RECORDED IN VOLUME 75 OF PLATS, PAGE 24, RECORDS OF KING COUNTY, WASHINGTON.

PARCEL C: (TAX PARCEL NO. 151560-0010-01)

LOTS 1 THROUGH 7, INCLUSIVE, CHANNEL CREST, ACCORDING TO THE PLAT THEREOF RECORDED IN VOLUME 72 OF PLATS, PAGE 63, RECORDS OF KING COUNTY, WASHINGTON;TOGETHER WITH AN UNDIVIDED 7/8THS INTEREST IN TRACT "A" OF SAID PLAT. SITUATE IN THE COUNTY OF KING, STATE OF WASHINGTON.

UNDERGROUND UTILITY NOTE:

UNDERGROUND UTILITY INFORMATION AS SHOWN HEREON IS APPROXIMATE ONLY AND IS BASED UPON OBSERVED GROUND EVIDENCE, THE CITY OF MERCER ISLAND PUBLIC GIS DATABASE, LOCAL AS-BUILT AND PLAN SETS PROVIDED BY CLIENT & PSE GAS RECORDS. AND ALSO AS PER TIES TO ABOVE GROUND STRUCTURES. CHADWICK AND WINTERS ASSUMES NO LIABILITY FOR THE ACCURACY OF THOSE RECORDS & LOCATIONS OR ACCEPTS RESPONSIBILITY FOR UNDERGROUND UTILITIES NOT DISCLOSED IN SAID RECORDS. THE FINAL LOCATION OF EXISTING UNDERGROUND UTILITIES IN AREAS CRITICAL TO DESIGN SHOULD BE ESTABLISHED BY CONTACTING THE UTILITY OWNER OR AGENCY. 1-800-424-5555 SHOULD ALWAYS BE CALLED PRIOR TO CONSTRUCTION.

OVERHEAD POWER LINE NOTE:

WE HAVE DETERMINED TO THE BEST OF OUR ABILITY THE OVERHEAD HIGH VOLTAGE POWER LINE WHICH IS CLOSEST TO THE PROJECT SITE AND HAVE DISPLAYED ITS HORIZONTAL AND VERTICAL LOCATION HEREON. HOWEVER, ADDITIONAL OVERHEAD SERVICE LINES MAY EXIST WHICH ARE NOT OBVIOUS TO US BY FIELD OBSERVATION AND POTENTIALLY IMPACT PROJECT DESIGN. THEREFORE, PRIOR TO DESIGN AND CONSTRUCTION WE RECOMMEND THAT PSE/SEATTLE CITY LIGHT BE CONSULTED REGARDING THE POSSIBLE EXISTENCE OF ADDITIONAL SERVICE LINES NOT DISPLAYED HEREON WHICH SHOULD BE CONSIDERED FOR PROJECT DESIGN.

SET CONTENTS:

SHEET 1 - CONTROL DIAGRAM
SHEET 2 - TITLE REPORT SCHEDULE B EXCEPTIONS
SHEET 3 - TOPOGRAPHIC SURVEY (WEST)
SHEET 4 - TOPOGRAPHIC SURVEY (EAST)
SHEET 5 - ARBOR EXHIBIT (WEST)
SHEET 6 - ARBOR EXHIBIT (EAST)
SHEET 7 - ARBOR TABLE

BRANDON E. WINTERS STATE OF WASHINGTON 45803 REGISTERED PROFESSIONAL LAND SURVEYOR

DATE: 12/2/2024

TOPOGRAPHIC SURVEY
3700 EAST MERCER WAY
MERCER ISLAND, WASHINGTON

CHADWICK WINTERS
LAND SURVEYING AND MAPPING
1422 N.W. 85TH ST., SEATTLE, WA 98117
PHONE: 206.297.0996
FAX: 206.297.0997
WEB: WWW.CHADWICKWINTERS.COM

PROJECT #:	23-7964
DRAWING:	23-7964 TOPO
CLIENT:	AUDREY COVNER
DATE:	12/2/2024
DRAWN BY:	TTB

TITLE REPORT SCHEDULE B EXCEPTIONS:

THIS SURVEY IS RELIANT UPON THE INFORMATION CONTAINED WITHIN CHICAGO TITLE INSURANCE COMPANY, TITLE CERTIFICATE NO. 0264638-16, DATED OCTOBER 30, 2023. ITEMS CIRCLED BELOW ARE SHOWN ON MAP.

1. RIGHT OF THE STATE OF WASHINGTON TO REMOVE OR DEPOSIT EARTH MATERIAL UPON SAID PREMISES IN EXTENSION OF SLOPES FOR GRADE OR EMBANKMENT, WITH RIGHT OF INGRESS AND EGRESS GRANTED BY INSTRUMENTS RECORDED UNDER RECORDING NOS. 3032001, 3034650 AND 3038601.

2. EASEMENT(S) FOR THE PURPOSE(S) SHOWN BELOW AND RIGHTS INCIDENTAL THERETO, AS GRANTED IN A DOCUMENT:

GRANTED TO:	PUGET SOUND POWER & LIGHT COMPANY
PURPOSE:	ELECTRIC TRANSMISSION AND/OR DISTRIBUTION LINE AND APPURTENANCES
RECORDING DATE:	JUNE 15, 1950
RECORDING NO.:	4025491
AFFECTS:	A PORTION OF SAID PREMISES

SURVEYORS NOTE: DESCRIPTION TOO GENERAL, NOT PLOTTABLE.

3. EASEMENT(S) FOR THE PURPOSE(S) SHOWN BELOW AND RIGHTS INCIDENTAL THERETO, AS GRANTED IN A DOCUMENT:

GRANTED TO:	MERCER ISLAND SEWER DISTRICT
PURPOSE:	SEWER PIPE LINE OR LINES, CONNECTIONS AND APPURTENANCES WITH RIGHT OF INGRESS AND EGRESS
RECORDING DATE:	MAY 6, 1959
RECORDING NO.:	5028729
AFFECTS:	A PORTION OF SAID PREMISES

SURVEYORS NOTE: AS CONSTRUCTED, NOT PLOTTABLE.

4. EASEMENT(S) FOR THE PURPOSE(S) SHOWN BELOW AND RIGHTS INCIDENTAL THERETO, AS GRANTED IN A DOCUMENT:

GRANTED TO:	MERCER ISLAND SEWER DISTRICT
PURPOSE:	SEWER LINE OR LINES, CONNECTIONS AND APPURTENANCES WITH RIGHT OF INGRESS AND EGRESS
RECORDING DATE:	AUGUST 4, 1959
RECORDING NO.:	5064115
AFFECTS:	A PORTION OF SAID PREMISES

5. EASEMENT(S) FOR THE PURPOSE(S) SHOWN BELOW AND RIGHTS INCIDENTAL THERETO, AS GRANTED IN A DOCUMENT:

GRANTED TO:	PUGET SOUND POWER & LIGHT COMPANY
PURPOSE:	ELECTRIC TRANSMISSION AND/OR DISTRIBUTION LINES AND EQUIPMENT
RECORDING DATE:	SEPTEMBER 28, 1960
RECORDING NO.:	5206698
AFFECTS:	A PORTION OF SAID PREMISES

SURVEYORS NOTE: AS CONSTRUCTED, NOT PLOTTABLE.

6. COVENANTS, CONDITIONS, RESTRICTIONS, RECITALS, RESERVATIONS, EASEMENTS, EASEMENT PROVISIONS, ENCROACHMENTS, DEDICATIONS, BUILDING SETBACK LINES, NOTES, STATEMENTS, AND OTHER MATTERS, IF ANY, BUT OMITTING ANY COVENANTS OR RESTRICTIONS, IF ANY, INCLUDING BUT NOT LIMITED TO THOSE BASED UPON RACE, COLOR, RELIGION, SEX, SEXUAL ORIENTATION, FAMILIAL STATUS, MARITAL STATUS, DISABILITY, HANDICAP, NATIONAL ORIGIN, ANCESTRY, OR SOURCE OF INCOME, AS SET FORTH IN APPLICABLE STATE OR FEDERAL LAWS, EXCEPT TO THE EXTENT THAT SAID COVENANT OR RESTRICTION IS PERMITTED BY APPLICABLE LAW, AS SET FORTH ON THE PLAT OF CHANNEL CREST:

RECORDING NO: 5543277
(AFFECTS: PARCEL C)

7. EASEMENT(S) FOR THE PURPOSE(S) SHOWN BELOW AND RIGHTS INCIDENTAL THERETO, AS GRANTED IN A DOCUMENT:

GRANTED TO:	PUGET SOUND POWER & LIGHT COMPANY
PURPOSE:	ELECTRIC TRANSMISSION AND/OR DISTRIBUTION LINE, FACILITIES AND EQUIPMENT
RECORDING DATE:	JULY 19, 1963
RECORDING NO.:	5612241
AFFECTS:	A PORTION OF SAID PREMISES

SURVEYORS NOTE: AS CONSTRUCTED, NOT PLOTTABLE.

8. COVENANTS, CONDITIONS, RESTRICTIONS, RECITALS, RESERVATIONS, EASEMENTS, EASEMENT PROVISIONS, ENCROACHMENTS, DEDICATIONS, BUILDING SETBACK LINES, NOTES, STATEMENTS, AND OTHER MATTERS, IF ANY, BUT OMITTING ANY COVENANTS OR RESTRICTIONS, IF ANY, INCLUDING BUT NOT LIMITED TO THOSE BASED UPON RACE, COLOR, RELIGION, SEX, SEXUAL ORIENTATION, FAMILIAL STATUS, MARITAL STATUS, DISABILITY, HANDICAP, NATIONAL ORIGIN, ANCESTRY, OR SOURCE OF INCOME, AS SET FORTH IN APPLICABLE STATE OR FEDERAL LAWS, EXCEPT TO THE EXTENT THAT SAID COVENANT OR RESTRICTION IS PERMITTED BY APPLICABLE LAW, AS SET FORTH ON THE PLAT OF DOYLE-HANSEN ADDITION:

RECORDING NO: 5699123
(AFFECTS: PARCEL B)

9. RELINQUISHMENT OF ALL EXISTING, FUTURE OR POTENTIAL EASEMENTS FOR ACCESS, LIGHT, VIEW AND AIR, AND ALL RIGHTS OF INGRESS, EGRESS AND REGRESS TO, FROM AND BETWEEN SAID LAND AND THE HIGHWAY OR HIGHWAYS TO BE CONSTRUCTED ON LANDS CONVEYED BY DEED:

TO:	STATE OF WASHINGTON
DATED:	JULY 13, 1967
RECORDING DATE:	DECEMBER 13, 1967
RECORDING NO.:	6277737

SURVEYORS NOTE: DEED FOR I-90.

10. AGREEMENT AND THE TERMS AND CONDITIONS THEREOF, AS DISCLOSED IN DOCUMENT:

RECORDING DATE:	AUGUST 12, 1968
RECORDING NO.:	6389877
REGARDING:	OPTION TO HOOK ON TO A WATERLINE SERVING SAID PREMISES

(AFFECTS: A PORTION OF LOTS 3 THROUGH 7 OF PARCEL C)

11. EASEMENT(S) FOR THE PURPOSE(S) SHOWN BELOW AND RIGHTS INCIDENTAL THERETO, AS DISCLOSED IN A DOCUMENT:

PURPOSE:	EXISTING WATER PUMP, PIPES AND OTHER EQUIPMENT
RECORDING DATE:	AUGUST 12, 1968
RECORDING NO.:	6389878

AFFECTS: A PORTION OF LOT 1 OF PARCEL C

12. EASEMENT(S) FOR THE PURPOSE(S) SHOWN BELOW AND RIGHTS INCIDENTAL THERETO, AS DISCLOSED IN A DOCUMENT:

GRANTED TO:	WATER DISTRICT NO. 91, KING COUNTY, WASHINGTON
PURPOSE:	WATER MAIN(S) AND WATER UTILITIES AND APPURTENANCES
RECORDING DATE:	APRIL 26, 1971
RECORDING NO.:	7104260335
AFFECTS:	A PORTION OF PARCEL B

13. EASEMENT(S) FOR THE PURPOSE(S) SHOWN BELOW AND RIGHTS INCIDENTAL THERETO, AS GRANTED IN A DOCUMENT:

GRANTED TO:	WATER DISTRICT NO. 91, KING COUNTY, WASHINGTON
PURPOSE:	WATER MAIN AND APPURTENANCES
RECORDING DATE:	MAY 5, 1971
RECORDING NO.:	7105050427
AFFECTS:	A PORTION OF LOT 5 OF PARCEL B

14. NOTICE OF CHARGES FOR CONNECTION TO WATER AND SEWER SYSTEMS AND THE TERMS AND CONDITIONS THEREOF:

EXECUTED BY:	CITY OF BELLEVUE
RECORDING DATE:	NOVEMBER 9, 1977
RECORDING NO.:	7711090948

SURVEYORS NOTE: NOT A SURVEY MATTER, NOT PLOTTABLE.

15. CONCOMITANT ZONING AGREEMENT AND THE TERMS AND CONDITIONS THEREOF:

RECORDING DATE:	MAY 24, 1979
RECORDING NO.:	7905240807
(AFFECTS: PARCEL A)	

SURVEYORS NOTE: NOT A SURVEY MATTER, NOT PLOTTABLE.

16. NOTICE OF CHARGES BY WATER, SEWER AND STORM AND SURFACE WATER UTILITIES AND THE TERMS AND CONDITIONS THEREOF:

EXECUTED BY:	CITY OF BELLEVUE
RECORDING DATE:	DECEMBER 20, 1996
RECORDING NO.:	9612200938

SURVEYORS NOTE: NOT A SURVEY MATTER, NOT PLOTTABLE.

17. FAT, OIL AND GREASE AGREEMENT AND THE TERMS AND CONDITIONS THEREOF:

BETWEEN:	HERZL-NER TAMID CONSERVATIVE CONGREGATION
AND:	CITY OF MERCER ISLAND
RECORDING DATE:	JUNE 27, 2019
RECORDING NO.:	20190627000163

(AFFECTS: PARCEL C)

SURVEYORS NOTE: NOT A SURVEY MATTER, NOT PLOTTABLE.

18. QUESTION OF LOCATION OF LATERAL BOUNDARIES OF SAID SECOND CLASS TIDELANDS OR SHORELANDS.

SURVEYORS NOTE: BLANKET IN NATURE, NOT PLOTTABLE.

19. ANY QUESTION THAT MAY ARISE DUE TO SHIFTING AND CHANGING IN THE COURSE, BOUNDARIES OR HIGH WATER LINE OF LAKE WASHINGTON.

SURVEYORS NOTE: BLANKET IN NATURE, NOT PLOTTABLE.

20. RIGHTS OF THE STATE OF WASHINGTON IN AND TO THAT PORTION, IF ANY, OF THE LAND WHICH LIES BELOW THE LINE OF ORDINARY HIGH WATER OF LAKE WASHINGTON.

SURVEYORS NOTE: BLANKET IN NATURE, NOT PLOTTABLE.

21. ANY PROHIBITION OR LIMITATION OF USE, OCCUPANCY OR IMPROVEMENT OF THE LAND RESULTING FROM THE RIGHTS OF THE PUBLIC OR RIPARIAN OWNERS TO USE ANY PORTION WHICH IS NOW OR WAS FORMERLY COVERED BY WATER.

SURVEYORS NOTE: BLANKET IN NATURE, NOT PLOTTABLE.

22. PARAMOUNT RIGHTS AND EASEMENTS IN FAVOR OF THE UNITED STATES FOR COMMERCE, NAVIGATION, FISHERIES AND THE PRODUCTION OF POWER.

SURVEYORS NOTE: BLANKET IN NATURE, NOT PLOTTABLE.

23. THE PROPERTY HEREIN DESCRIBED IS CARRIED ON THE TAX ROLLS AS EXEMPT AS TO GENERAL REAL PROPERTY TAXES (NOT SPECIAL TAXES AND CHARGES). HOWEVER, IT WILL BECOME TAXABLE ON THE DATE OF THE EXECUTION OF A CONVEYANCE TO A TAXABLE ENTITY AND SUBJECT TO THE LIEN OF REAL PROPERTY TAXES FOR THE BALANCE OF THE YEAR FROM THAT DATE:

TAX ACCOUNT NO.:	082405-9045-07, 210700-0010-06 AND 151560-0010-01
LEVY CODE:	1031

SURVEYORS NOTE: NOT A SURVEY MATTER, NOT PLOTTABLE.

24. SPECIAL TAXES AND CHARGES, PAYABLE FEBRUARY 15, DELINQUENT IF FIRST HALF UNPAID ON MAY 1, SECOND HALF DELINQUENT IF UNPAID ON NOVEMBER 1 OF THE TAX YEAR (AMOUNTS DO NOT INCLUDE INTEREST AND PENALTIES):

YEAR:	2023
TAX ACCOUNT NO.:	082405-9045-07
LEVY CODE:	1031
ASSESSED VALUE-LAND:	$1,686,000.00
ASSESSED VALUE-IMPROVEMENTS:	$0.00
SPECIAL TAXES AND CHARGES:	
BILLED:	$12.30
PAID:	$12.30
UNPAID:	$0.00
(AFFECTS: PARCEL A)	

SURVEYORS NOTE: NOT A SURVEY MATTER, NOT PLOTTABLE.

25. SPECIAL TAXES AND CHARGES, PAYABLE FEBRUARY 15, DELINQUENT IF FIRST HALF UNPAID ON MAY 1, SECOND HALF DELINQUENT IF UNPAID ON NOVEMBER 1 OF THE TAX YEAR (AMOUNTS DO NOT INCLUDE INTEREST AND PENALTIES):

YEAR:	2023
TAX ACCOUNT NO.:	210700-0010-06
LEVY CODE:	1031
ASSESSED VALUE-LAND:	$2,163,400.00
ASSESSED VALUE-IMPROVEMENTS:	$0.00
SPECIAL TAXES AND CHARGES:	
BILLED:	$12.30
PAID:	$12.30
UNPAID:	$0.00

(AFFECTS: PARCEL B)

SURVEYORS NOTE: NOT A SURVEY MATTER, NOT PLOTTABLE.

26. SPECIAL TAXES AND CHARGES, PAYABLE FEBRUARY 15, DELINQUENT IF FIRST HALF UNPAID ON MAY 1, SECOND HALF DELINQUENT IF UNPAID ON NOVEMBER 1 OF THE TAX YEAR (AMOUNTS DO NOT INCLUDE INTEREST AND PENALTIES):

YEAR:	2023
TAX ACCOUNT NO.:	151560-0010-01
LEVY CODE:	1031
ASSESSED VALUE-LAND:	$3,620,600.00
ASSESSED VALUE-IMPROVEMENTS:	$1,200,600.00
SPECIAL TAXES AND CHARGES:	
BILLED:	$12.57
PAID:	$12.57
UNPAID:	$0.00

(AFFECTS: PARCEL C)

SURVEYORS NOTE: NOT A SURVEY MATTER, NOT PLOTTABLE.

27. CITY, COUNTY OR LOCAL IMPROVEMENT DISTRICT ASSESSMENTS, IF ANY.

SURVEYORS NOTE: NOT A SURVEY MATTER, NOT PLOTTABLE.

28. LIABILITY FOR SEWER TREATMENT CAPACITY CHARGES, IF ANY, AFFECTING CERTAIN AREAS OF KING, PIERCE AND SNOHOMISH COUNTIES. SAID CHARGES COULD APPLY TO PROPERTY CONNECTING TO THE METROPOLITAN SEWERAGE FACILITIES OR RECONNECTING OR CHANGING ITS USE AND/OR STRUCTURE AFTER FEBRUARY 1, 1990.

PLEASE CONTACT THE KING COUNTY WASTEWATER TREATMENT DIVISION, CAPACITY CHARGE PROGRAM, FOR FURTHER INFORMATION AT 206-296-1450 OR FAX NO. 206-263-6823 OR EMAIL AT CAPCHARGEESCROW@KINGCOUNTY.GOV.

* A MAP SHOWING SEWER SERVICE AREA BOUNDARIES AND INCORPORATED AREAS CAN BE FOUND ONLINE. UNRECORDED SEWER CAPACITY CHARGES ARE NOT A LIEN ON TITLE TO THE LAND.

SURVEYORS NOTE: NOT A SURVEY MATTER, NOT PLOTTABLE.

29. A DEED OF TRUST TO SECURE AN INDEBTEDNESS IN THE AMOUNT SHOWN BELOW:

AMOUNT:	$200,000.00
DATED:	JANUARY 23, 2018
TRUSTOR/GRANTOR:	HERZL-NER TAMID CONSERVATIVE CONGREGATION, A WASHINGTON NOT FOR PROFIT CORPORATION
TRUSTEE:	MARV STRASBURG, P.S., A CORPORATION
BENEFICIARY:	BRUCE GLADNER AND MARY GLADNER, HUSBAND AND WIFE
RECORDING DATE:	JANUARY 26, 2018
RECORDING NO.:	20180126001153
(AFFECTS: PARCEL A)	

SURVEYORS NOTE: NOT A SURVEY MATTER, NOT PLOTTABLE.

30. A DEED OF TRUST TO SECURE AN INDEBTEDNESS IN THE AMOUNT SHOWN BELOW:

AMOUNT:	$200,000.00
DATED:	JANUARY 23, 2018
TRUSTOR/GRANTOR:	HERZL-NER TAMID CONSERVATIVE CONGREGATION, A WASHINGTON NOT FOR PROFIT CORPORATION
TRUSTEE:	MARV STRASBURG, P.S., A CORPORATION
BENEFICIARY:	LEWIS EDELHEIT AND SUSAN EDELHEIT, HUSBAND AND WIFE
RECORDING DATE:	JANUARY 26, 2018
RECORDING NO.:	20180126001154

(AFFECTS: PARCEL A)

SURVEYORS NOTE: NOT A SURVEY MATTER, NOT PLOTTABLE.

31. ANY UNRECORDED LEASEHOLDS, RIGHT OF VENDORS AND HOLDERS OF SECURITY INTERESTS ON PERSONAL PROPERTY INSTALLED UPON THE LAND AND RIGHTS OF TENANTS TO REMOVE TRADE FIXTURES AT THE EXPIRATION OF THE TERMS.

SURVEYORS NOTE: NOT A SURVEY MATTER, NOT PLOTTABLE.

BRANDON E. WINTERS STATE OF WASHINGTON 45803 REGISTERED PROFESSIONAL LAND SURVEYOR

DATE: 12/2/2024

TOPOGRAPHIC SURVEY
3700 EAST MERCER WAY
MERCER ISLAND, WASHINGTON

CHADWICK WINTERS
LAND SURVEYING AND MAPPING
1422 N.W. 85TH ST., SEATTLE, WA 98117
PHONE: 206.297.0996
FAX: 206.297.0997
WEB: WWW.CHADWICKWINTERS.COM

PROJECT #:	23-7964
DRAWING:	23-7964 TOPO
CLIENT:	AUDREY COVNER
DATE:	12/2/2024
DRAWN BY:	TTB

SITE TOPO (WEST)

NORTH

SCALE: 1" = 20'

0 10 20 40

ACCESS ROAD

NO ADDRESS
TAX NO. 0824059310

149.18'

N 78°09'41" E

198.59'

N 65°24'55" E

PARCEL A
NO ADDRESS
TAX NO. 0824059045

3650 E MERCER WAY
TAX NO. 1515600080

S 89°09'34" E

3600 E MERCER WAY
TAX NO. 151560TRCT

PARCEL C
BUILDING
3700 E MERCER WAY
TAX NO. 1515600010

MATCH LINE (SHEET 4)

PROPERTY CORNER
FOUND REBAR & CAP
AT DEED CORNER
"LS 19036"

MERCER ISLAND BOAT LAUNCH SIGN

E MERCER WAY

N 01°06'11" E 85.06'

CALCULATED INTERSECTION
POINT ON SECTION LINE

10' WATER LINE EASEMENT
RECORDING NO.
7104260335

N 89°09'34" W 70.61'

SECTION LINE
N 01°12'29" E 843.34'

SECTION 7
SECTION 8

PARCEL B
NO ADDRESS
TAX NO. 2107000010

PROPERTY CORNER
FOUND REBAR & CAP AT LOT CORNER
"LS 13035"

NO ADDRESS
TAX NO. 2107007RCT

S 89°09'34" E

PRIVATE ROAD

548.88'

R=20.00
Δ=90°15'45"
L=31.51'

SURFACE MONUMENT
FOUND MONUMENT AT GRADE LEVEL IN SEPTEMBER 2023
"CMI 23038/22/1992"

LEGEND:

	ASPHALT SURFACE	CP	CONCRETE PIPE		GAS METER (GM)	X" OT	ORNAMENTAL TREE	T	TELEPHONE LINE (UNDERGROUND)
AC	ASPHALT CURB	CRW	CONCRETE RETAINING WALL		GAS VALVE (GV)	PLNTR	PLANTER	TS	TELEPHONE SENTRY
	AREA DRAIN (AD)	CS	CONCRETE STAIRS	GB	GRADE BREAK	PP	POWER POLE	TOE	TOE OF SLOPE
	BOLLARD (BLRD)	DI	DUCTILE IRON PIPE	GUY	OVERHEAD GUY WIRE		PAINTED UTILITY LINE LOCATION	TOP	TOP OF SLOPE
	BRICK SURFACE	DR	DOOR		GUY ANCHOR	P	POWER LINE (UNDERGROUND)	USW	UN-SHIELDED WIRE (OHP)
BS	BRICK STAIRS	X' DT	DECIDUOUS TREE	GP	GUY POLE	PSD	STORM DRAIN LINE		WOOD FENCE (WF)
BOV	BLOW OFF VALVE (WATER)	X' ET	EVERGREEN TREE	IE	INVERT ELEVATION	SD	SERVICE DRAIN LINE (STORM)	W	WATER LINE
CC	CONCRETE CURB		ELECTRICAL JUNCTION BOX (EJB)	ICB	IRRIGATION BOX	PSS	SANITARY SEWER	WDM	WATER DOWN MARKER
CCTV	CLOSED CIRCUIT TV CAMERA		ELECTRIC METER (EM)		LIGHT POLE (METAL)	PS	PARKING SPACE	WM	WATER METER
CD	CONDUIT DROP	ET	ELECTRIC TRANSFORMER		LIGHT POLE (WOOD)	R/W	RIGHT OF WAY		WATER GATE VALVE (WMH)
	CHAIN LINK FENCE (CLF)	EV	ELECTRIC VAULT		MAIL BOX (MB) (PRIVATE)	(R)	RECORD INFORMATION		WATER VALVE
	CONCRETE SURFACE	FDC	FIRE DEPT CONNECTION	OET	OVERHEAD TRANSFORMER		ROCKERY	WRW	WOOD RETAINING WALL
COL	COLUMN	FH	FIRE HYDRANT	OHC	OVERHEAD COMMUNICATION		SDMH/SSMH (STORM/SEWER MANHOLE)	WS	WOOD STAIRS
		GDM	GAS DOWN MARKER	OHP	OVERHEAD POWER	SSS	SANITARY SIDE SEWER (RECORD)	XC	EXTRUDED CURB
		G	GAS LINE	OHWM	ORDINARY HIGH WATER LEVEL		SIGN (AS NOTED)		YARD LIGHT (YL)

SHEET 3 OF 7

BRANDON E. WINTERS
STATE OF WASHINGTON
45803
REGISTERED
PROFESSIONAL LAND SURVEYOR

DATE: 12/2/2024

TOPOGRAPHIC SURVEY
3700 EAST MERCER WAY
MERCER ISLAND, WASHINGTON

CHADWICK WINTERS

LAND SURVEYING AND MAPPING
1422 N.W. 85TH ST., SEATTLE, WA 98117
PHONE: 206.297.0996
FAX: 206.297.0997
WEB: WWW.CHADWICKWINTERS.COM

PROJECT #: 23-7964
DRAWING: 23-7964 TOPO
CLIENT: AUDREY COVNER
DATE: 12/2/2024
DRAWN BY: TTB

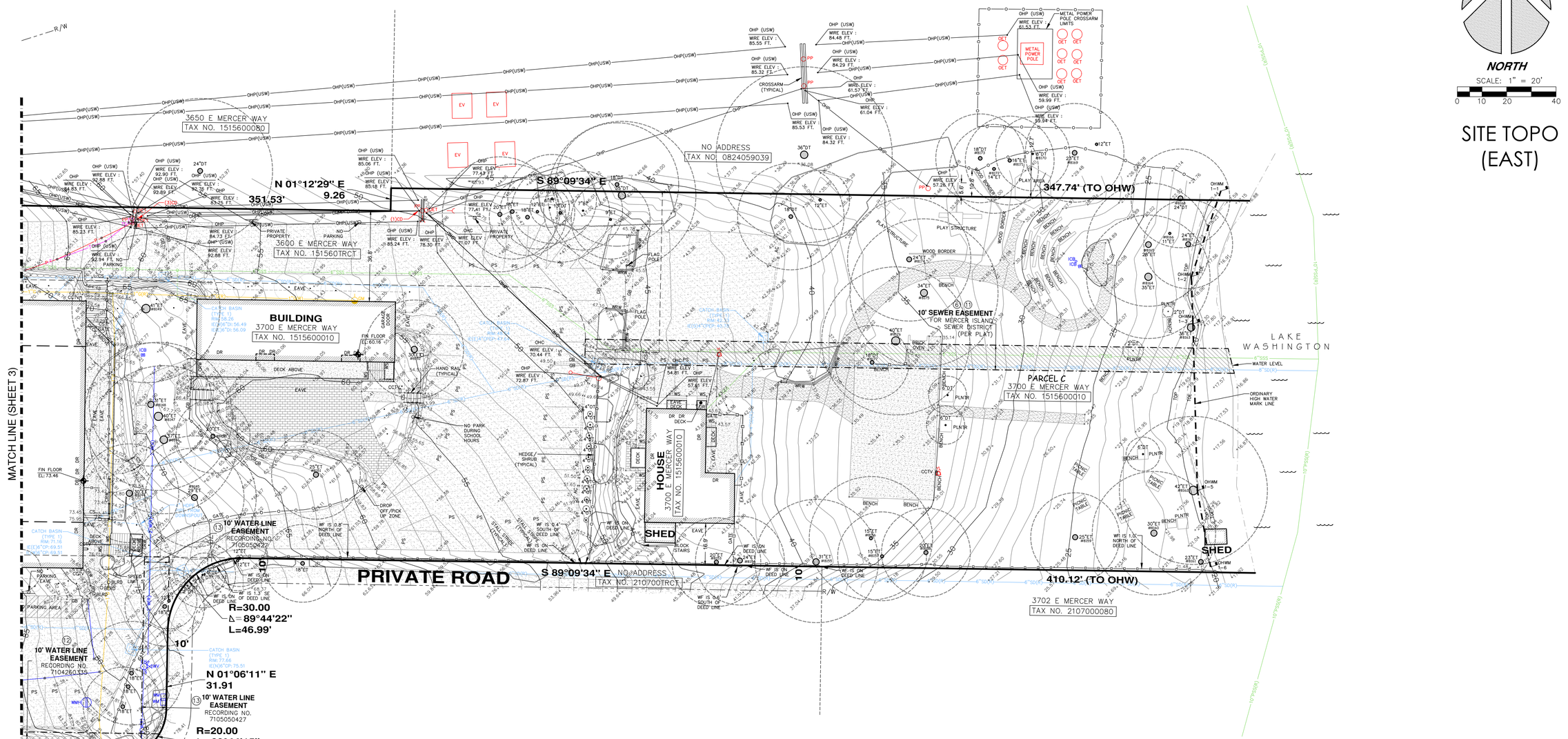

LEGEND:

	ASPHALT SURFACE	CP	CONCRETE PIPE		GAS METER (GM)	X' OT	ORNAMENTAL TREE	T	TELEPHONE LINE (UNDERGROUND)
AC	ASPHALT CURB	CRW	CONCRETE RETAINING WALL		GAS VALVE (GV)	PLNTR	PLANTER	TS	TELEPHONE SENTRY
	AREA DRAIN (AD)	CS	CONCRETE STAIRS	GB	GRADE BREAK	PP	POWER POLE	TOE	TOE OF SLOPE
	BOLLARD (BLRD)	DI	DUCTILE IRON PIPE	GUY	OVERHEAD GUY WIRE		PAINTED UTILITY LINE LOCATION	TOP	TOP OF SLOPE
	BRICK SURFACE	DR	DOOR		GUY ANCHOR	P	POWER LINE (UNDERGROUND)	USW	UN-SHIELDED WIRE (OHP)
BS	BRICK STAIRS	X' DT	DECIDUOUS TREE	GP	GUY POLE	PSD	STORM DRAIN LINE		WOOD FENCE (WF)
BOV	BLOW OFF VALVE (WATER)	X' ET	EVERGREEN TREE	IE	INVERT ELEVATION	SD	SERVICE DRAIN LINE (STORM)	W	WATER LINE
CC	CONCRETE CURB		ELECTRICAL JUNCTION BOX (EJB)	ICB	IRRIGATION BOX	PSS	SANITARY SEWER	WDM	WATER DOWN MARKER
CCTV	CLOSED CIRCUIT TV CAMERA		ELECTRIC METER (EM)		LIGHT POLE (METAL)	PS	PARKING SPACE	WM	WATER METER
CD	CONDUIT DROP	ET	ELECTRIC TRANSFORMER		LIGHT POLE (WOOD)	R/W	RIGHT OF WAY		WATER GATE VALVE (WMH)
	CHAIN LINK FENCE (CLF)	EV	ELECTRIC VAULT		MAIL BOX (MB) (PRIVATE)	(R)	RECORD INFORMATION		WATER VALVE
	CONCRETE SURFACE	FDC	FIRE DEPT CONNECTION	OET	OVERHEAD TRANSFORMER		ROCKERY	WRW	WOOD RETAINING WALL
COL	COLUMN	FH	FIRE HYDRANT	OHC	OVERHEAD COMMUNICATION		SDMH/SSMH (STORM/SEWER MANHOLE)	WS	WOOD STAIRS
		GDM	GAS DOWN MARKER	OHP	OVERHEAD POWER	SSS	SANITARY SIDE SEWER (RECORD)	XC	EXTRUDED CURB
		G	GAS LINE	OHWM	ORDINARY HIGH WATER LEVEL		SIGN (AS NOTED)		YARD LIGHT (YL)

BRANDON E. WINTERS STATE OF WASHINGTON 45803 REGISTERED PROFESSIONAL LAND SURVEYOR

DATE: 12/2/2024

TOPOGRAPHIC SURVEY
3700 EAST MERCER WAY
MERCER ISLAND, WASHINGTON

CHADWICK WINTERS
LAND SURVEYING AND MAPPING
1422 N.W. 85TH ST., SEATTLE, WA 98117
PHONE: 206.297.0996
FAX: 206.297.0997
WEB: WWW.CHADWICKWINTERS.COM

PROJECT #:	23-7964
DRAWING:	23-7964 TOPO
CLIENT:	AUDREY COVNER
DATE:	12/2/2024
DRAWN BY:	TTB

ARBOR EXHIBIT (WEST)

DECIDUOUS TREE DRIP LINE
CONIFEROUS TREE DRIP LINE

NORTH
SCALE: 1" = 20'
0 10 20 40

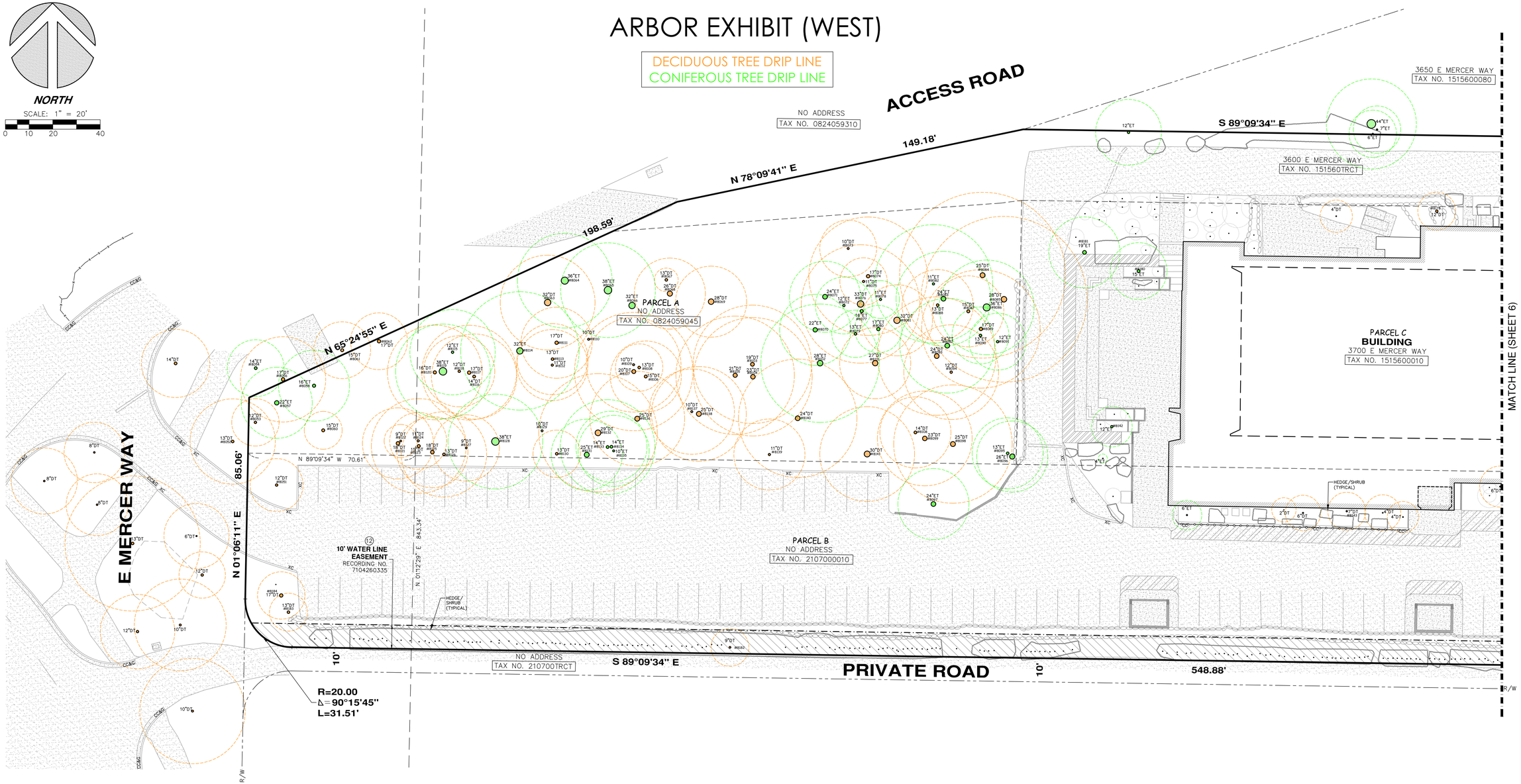

SHEET 5 OF 7

TOPOGRAPHIC SURVEY
3700 EAST MERCER WAY
MERCER ISLAND, WASHINGTON

BRANDON E. WINTERS
STATE OF WASHINGTON
45803
REGISTERED
PROFESSIONAL LAND SURVEYOR
DATE: 12/2/2024

CHADWICK WINTERS
LAND SURVEYING AND MAPPING
1422 N.W. 85TH ST., SEATTLE, WA 98117
PHONE: 206.297.0996
FAX: 206.297.0997
WEB: WWW.CHADWICKWINTERS.COM

PROJECT #: 23-7964
DRAWING: 23-7964 TOPO
CLIENT: AUDREY COVNER
DATE: 12/2/2024
DRAWN BY: TTB

ARBOR EXHIBIT (EAST)

DECIDUOUS TREE DRIP LINE
CONIFEROUS TREE DRIP LINE

NORTH
SCALE: 1" = 20'
0 10 20 40

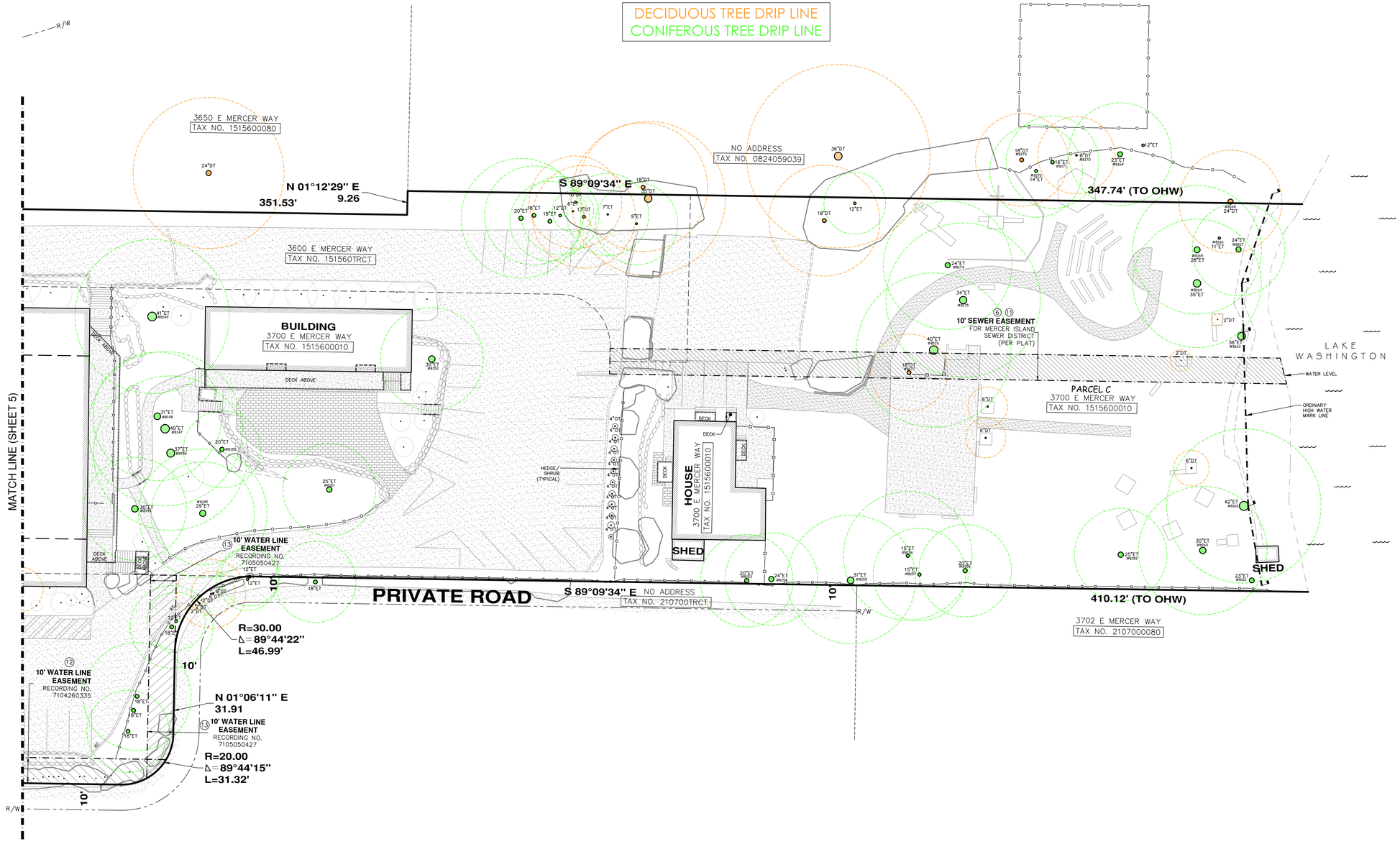

SHEET 6 OF 7

BRANDON E. WINTERS
STATE OF WASHINGTON
45803
REGISTERED
PROFESSIONAL LAND SURVEYOR
DATE: 12/2/2024

TOPOGRAPHIC SURVEY
3700 EAST MERCER WAY
MERCER ISLAND, WASHINGTON

CHADWICK WINTERS
LAND SURVEYING AND MAPPING
1422 N.W. 85TH ST., SEATTLE, WA 98117
PHONE: 206.297.0996
FAX: 206.297.0997
WEB: WWW.CHADWICKWINTERS.COM

PROJECT #:	23-7964
DRAWING:	23-7964 TOPO
CLIENT:	AUDREY COVNER
DATE:	12/2/2024
DRAWN BY:	TTB

ARBOR TABLE PROVIDED BY DAVEY RESOURCE GROUP

Tree ID	DSH (in)	Avg. Drip line (ft)	Height (ft)	Species	Condition	Exceptional Tree Status	Preserve Priority
8051	14	12	27	Purple leaf plum (Prunus cerasifera)	Fair	Grove	3
8052	13	18	27	Norway maple (Acer platanoides)	Good	Grove	2
8053	12.2	10	33	Ash spp (Fraxius spp)	Fair	Grove	3
8054	14	12	30	Western red cedar (Thuja pilcata)	Fair	Grove	2
8055	12	10	27	Norway maple (Acer platanoides)	Good	Grove	2
8056	17	18	24	Norway maple (Acer platanoides)	Fair	Grove	2
8057	22	15	72	Douglas fir (Pseudotsuga menziesii)	Fair	Grove	2
8058	16	15	66	Douglas fir (Pseudotsuga menziesii)	Fair	Grove	2
8059	17	8	18	Willow spp (Salix spp)	Very Poor	Exceptional (Grove)	3
8060	15	8	51	Black cottonwood (Populus trichocarpa)	Good	Grove	3
8061	15	12	27	Norway maple (Acer platanoides)	Good	Grove	2
8062	17	12	20	Norway maple (Acer platanoides)	Fair	Grove	2
8063	32	20	70	Willow spp (Salix spp)	Fair	Exceptional (Grove)	2
8064	36	20	77	Western red cedar (Thuja pilcata)	Poor	Exceptional (Grove)	2
8065	38	20	77	Western red cedar (Thuja pilcata)	Critical	Exceptional (Grove)	3
8066	32	20	70	Western red cedar (Thuja pilcata)	Very Poor	Exceptional (Grove)	3
8067	13	5	17	Big leaf maple (Acer macrophyllum)	Critical	Grove	3
8068	25.8	15	55	Big leaf maple (Acer macrophyllum)	Very Poor	Grove	3
8069	28	15	60	Big leaf maple (Acer macrophyllum)	Fair	Grove	2
8070	22	15	60	Western red cedar (Thuja pilcata)	Poor	Grove	2
8071	24	15	50	Western red cedar (Thuja pilcata)	Poor	Grove	3
8072	12	12	60	Western red cedar (Thuja pilcata)	Poor	Grove	3
8073	10	12	55	Big leaf maple (Acer macrophyllum)	Fair	Grove	2
8074	17	25	75	Big leaf maple (Acer macrophyllum)	Fair	Grove	2
8075	11	10	60	Big leaf maple (Acer macrophyllum)	Fair	Grove	2
8076	33.4	25	80	Big leaf maple (Acer macrophyllum)	Fair	Grove	2
8077	16	0	65	Western red cedar (Thuja pilcata)	Dead	Grove	4
8078	11	8	40	Western red cedar (Thuja pilcata)	Fair	Grove	2
8079	13	10	27	Western red cedar (Thuja pilcata)	Poor	Grove	3
8080	17	10	51	Western red cedar (Thuja pilcata)	Fair	Grove	2
8081	32.3	15	69	Big leaf maple (Acer macrophyllum)	Fair	Grove	2
8082	11	25	50	Big leaf maple (Acer macrophyllum)	Fair	Grove	2
8083	24	20	60	Douglas fir (Pseudotsuga menziesii)	Fair	Grove	2
8084	25	35	60	Big leaf maple (Acer macrophyllum)	Good	Grove	2
8085	28.2	35	60	Big leaf maple (Acer macrophyllum)	Fair	Grove	2
8086	36	20	60	Western red cedar (Thuja pilcata)	Fair	Exceptional (Grove)	2
8087	14.7	15	60	Big leaf maple (Acer macrophyllum)	Fair	Grove	2
8088	13	15	50	Big leaf maple (Acer macrophyllum)	Fair	Grove	2
8089	17	25	60	Big leaf maple (Acer macrophyllum)	Fair	Grove	2
8090	13	12	60	Western red cedar (Thuja pilcata)	Fair	Grove	2
8091	12	12	60	Western red cedar (Thuja pilcata)	Fair	Grove	2
8092	24	20	60	Western red cedar (Thuja pilcata)	Critical	Grove	3
8094	12	20	65	Big leaf maple (Acer macrophyllum)	Good	Grove	2
8093	24	25	65	Big leaf maple (Acer macrophyllum)	Good	Grove	2
8095	13	15	63	Douglas fir (Pseudotsuga menziesii)	Good	Grove	2
8096	26	15	42	Western red cedar (Thuja pilcata)	Fair	Grove	2
8097	24	15	60	Western red cedar (Thuja pilcata)	Good	Grove	2
8098	25	25	60	Big leaf maple (Acer macrophyllum)	Poor	Grove	3
8099	23	20	60	Big leaf maple (Acer macrophyllum)	Poor	Grove	3
8100	14.2	15	60	Big leaf maple (Acer macrophyllum)	Fair	Grove	2
8101	27	25	50	Big leaf maple (Acer macrophyllum)	Fair	Grove	2
8102	28	25	81	Western red cedar (Thuja pilcata)	Fair	Grove	2
8103	19	25	74	Big leaf maple (Acer macrophyllum)	Fair	Grove	2
8104	23	25	80	Big leaf maple (Acer macrophyllum)	Good	Grove	2
8105	21	25	80	Big leaf maple (Acer macrophyllum)	Fair	Grove	2
8106	14.9	15	60	Big leaf maple (Acer macrophyllum)	Very Poor	Grove	3
8107	20	25	65	Big leaf maple (Acer macrophyllum)	Fair	Grove	2
8108	13.5	10	51	Big leaf maple (Acer macrophyllum)	Very Poor	Grove	3
8109	10	20	50	Big leaf maple (Acer macrophyllum)	Fair	Grove	2
8110	10	0	50	Big leaf maple (Acer macrophyllum)	Dead	Grove	4
8111	17	15	66	Big leaf maple (Acer macrophyllum)	Good	Grove	2
8112	11	15	50	Big leaf maple (Acer macrophyllum)	Fair	Grove	2
8113	13	15	50	Big leaf maple (Acer macrophyllum)	Poor	Grove	3
8114	32	25	80	Western red cedar (Thuja pilcata)	Critical	Exceptional (Grove)	3
8115	12	18	42	Big leaf maple (Acer macrophyllum)	Fair	Grove	2
8116	14	18	40	Black locust (Robinia pseudoacacia)	Very Poor	Grove	3
8117	17	20	45	Big leaf maple (Acer macrophyllum)	Fair	Grove	2
8118	12	15	45	Big leaf maple (Acer macrophyllum)	Fair	Grove	2
8120	16	20	46	Big leaf maple (Acer macrophyllum)	Fair	Grove	2
8119	38	20	80	Western red cedar (Thuja pilcata)	Fair	Exceptional (Grove)	2
8121	18	15	66	Big leaf maple (Acer macrophyllum)	Fair	Grove	2
8122	9	7	66	Ash spp (Fraxius spp)	Fair	Grove	3
8123	14.8	20	60	Big leaf maple (Acer macrophyllum)	Fair	Grove	2
8124	11	12	60	Big leaf maple (Acer macrophyllum)	Fair	Grove	2
8125	18.4	15	66	Big leaf maple (Acer macrophyllum)	Fair	Grove	2
8126	13	18	66	Big leaf maple (Acer macrophyllum)	Fair	Grove	2
8127	9	14	60	Big leaf maple (Acer macrophyllum)	Fair	Grove	2
8128	38	20	84	Western red cedar (Thuja pilcata)	Fair	Exceptional (Grove)	2
8129	10	0	55	Red alder (Alnus rubra)	Critical	Grove	3
8130	13	10	45	Big leaf maple (Acer macrophyllum)	Fair	Grove	2
8131	25	15	54	Western red cedar (Thuja pilcata)	Fair	Grove	2
8132	29	25	54	Big leaf maple (Acer macrophyllum)	Fair	Grove	2
8133	14	20	54	Western red cedar (Thuja pilcata)	Fair	Grove	2
8134	13.6	15	50	Western red cedar (Thuja pilcata)	Fair	Grove	2
8135	10	15	45	Douglas fir (Pseudotsuga menziesii)	Fair	Grove	2
8136	25	20	80	Big leaf maple (Acer macrophyllum)	Fair	Grove	2
8137	10	18	65	Big leaf maple (Acer macrophyllum)	Very Poor	Grove	3
8138	25	20	70	Big leaf maple (Acer macrophyllum)	Very Poor	Grove	3
8139	10.8	15	33	Big leaf maple (Acer macrophyllum)	Fair	Grove	2
8140	24	25	54	Big leaf maple (Acer macrophyllum)	Fair	Grove	2
8141	29.7	20	54	Big leaf maple (Acer macrophyllum)	Very Poor	Grove	3
8142	11	8	39	Yellow cedar (Callitropsis nootkatensis)	Fair	Not Specific	2
8143	7.7	8	39	Vine maple (Acer circinatum)	Fair	Not Specific	2
8144	30	20	81	Western red cedar (Thuja pilcata)	Good	Exceptional	2
8145	29	25	84	Western red cedar (Thuja pilcata)	Good	Not Specific	2
8146	37	30	93	Western red cedar (Thuja pilcata)	Fair	Exceptional	2
8147	40	30	93	Western red cedar (Thuja pilcata)	Fair	Exceptional	2
8148	31	25	90	Western red cedar (Thuja pilcata)	Good	Exceptional	2
8149	41	30	95	Lawsons cypress (Chamaecyparis lawsoniana)	Fair	Exceptional	2
8150	20	15	78	Western red cedar (Thuja pilcata)	Fair	Not Specific	2
8151	25	18	84	Douglas fir (Pseudotsuga menziesii)	Good	Not Specific	2
8152	30.1	20	60	Western red cedar (Thuja pilcata)	Fair	Not Specific	2
8153	20	18	80	Douglas fir (Pseudotsuga menziesii)	Good	Not Specific	2
8154	24	18	81	Douglas fir (Pseudotsuga menziesii)	Good	Not Specific	2
8155	31	25	85	Western red cedar (Thuja pilcata)	Fair	Exceptional	2
8156	15	25	80	Douglas fir (Pseudotsuga menziesii)	Good	Not Specific	2
8157	15	18	80	Douglas fir (Pseudotsuga menziesii)	Fair	Not Specific	2
8158	20	18	78	Douglas fir (Pseudotsuga menziesii)	Fair	Not Specific	2
8159	25	18	42	Ash spp (Fraxius spp)	Fair	Exceptional	2
8160	30	25	93	Douglas fir (Pseudotsuga menziesii)	Critical	Exceptional	3
8161	22.9	0	45	Ash spp (Fraxius spp)	Critical	Not Specific	3
8162	42	30	78	Douglas fir (Pseudotsuga menziesii)	Good	Exceptional	2
8163	36	0	99	Douglas fir (Pseudotsuga menziesii)	Critical	Exceptional	4
8164	35	25	94	Douglas fir (Pseudotsuga menziesii)	Fair	Exceptional	2
8165	28	25	114	Douglas fir (Pseudotsuga menziesii)	Fair	Not Specific	2
8166	11	0	68	Douglas fir (Pseudotsuga menziesii)	Dead	Not Specific	4
8167	24	18	129	Douglas fir (Pseudotsuga menziesii)	Very Poor	Not Specific	3
8168	24	20	75	Ash spp (Fraxius spp)	Very Poor	Not Specific	3
8169	23	20	78	Deodar cedar (Cedrus deodara)	Good	Not Specific	2
8170	9	15	24	Sugar maple (Acer saccharum)	Good	Not Specific	2
8171	16	18	78	Deodar cedar (Cedrus deodara)	Good	Not Specific	2
8172	14	18	42	Deodar cedar (Cedrus deodara)	Good	Not Specific	2
8173	18	18	42	Big leaf maple (Acer macrophyllum)	Poor	Not Specific	3
8174	24	25	57	Douglas fir (Pseudotsuga menziesii)	Fair	Not Specific	2
8175	34	30	83	Douglas fir (Pseudotsuga menziesii)	Fair	Exceptional	2
8176	41	30	90	Douglas fir (Pseudotsuga menziesii)	Fair	Exceptional	2
8177	18.2	15	24	Cherry (Prunus spp)	Fair	Not Specific	2
8178	12	8	18	Cherry (Prunus spp)	Fair	Not Specific	2
8179	20	8	20	Cherry (Prunus spp)	Fair	Not Specific	2
8180	14.8	12	49	Yellow cedar (Callitropsis nootkatensis)	Fair	Not Specific	2
8181	19.2	15	48	Yellow cedar (Callitropsis nootkatensis)	Fair	Not Specific	2
8182	9.1	8	21	English Hawthorn (Crataegus monogyna)	Fair	Not Specific	3
8183	12.7	8	18	Cherry (Prunus spp)	Fair	Not Specific	2
8184	17.5	10	20	Cherry (Prunus spp)	Fair	Not Specific	2

BRANDON E. WINTERS
STATE OF WASHINGTON
45803
REGISTERED
PROFESSIONAL LAND SURVEYOR

DATE: 12/2/2024

TOPOGRAPHIC SURVEY
3700 EAST MERCER WAY
MERCER ISLAND, WASHINGTON

CHADWICK WINTERS
LAND SURVEYING AND MAPPING
1422 N.W. 85TH ST., SEATTLE, WA 98117
PHONE: 206.297.0996
FAX: 206.297.0997
WEB: WWW.CHADWICKWINTERS.COM

PROJECT #: 23-7964
DRAWING: 23-7964 TOPO
CLIENT: AUDREY COVNER
DATE: 12/2/2024
DRAWN BY: TTB

Barnabie Point Project

BUILDING PERMIT

GENERAL NOTES

1. ALL WORK AND MATERIALS SHALL BE IN ACCORDANCE WITH CURRENT CITY OF MERCER ISLAND DEVELOPMENT STANDARDS; THE CURRENT EDITION OF THE WASHINGTON STATE DEPARTMENT OF TRANSPORTATION STANDARD SPECIFICATIONS FOR ROAD, BRIDGE, AND MUNICIPAL CONSTRUCTION; AND THE ADOPTED EDITION OF THE WASHINGTON STATE DEPARTMENT OF ECOLOGY STORMWATER MANAGEMENT MANUAL FOR WESTERN WASHINGTON.
2. ALL WORK WITHIN THE PLAT AND CITY RIGHT-OF-WAY SHALL BE SUBJECT TO THE INSPECTION OF THE CITY.
3. PRIOR TO ANY SITE CONSTRUCTION INCLUDING CLEARING/LOGGING OR GRADING, THE SITE CLEARING LIMITS SHALL BE LOCATED AND FIELD IDENTIFIED BY THE PROJECT SURVEYOR (OR PROJECT ENGINEER) AS REQUIRED BY THESE PLANS. THE PROJECT SURVEYOR'S NAME AND PHONE NUMBER IS BRANDON WINTERS, 206.297.0996.
4. THE DEVELOPER, CONTRACTOR AND PROJECT ENGINEER IS RESPONSIBLE FOR WATER QUALITY AS DETERMINED BY THE MONITORING PROGRAM ESTABLISHED BY THE PROJECT ENGINEER.
5. PRIOR TO ANY SITE WORK, THE CONTRACTOR SHALL CONTACT THE CITY OF MERCER ISLAND COMMUNITY DEVELOPMENT DEPARTMENT AT 425-263-8000 TO SCHEDULE A PRECONSTRUCTION CONFERENCE.
6. ENGINEERED AS-BUILT DRAWINGS IN ACCORDANCE WITH THE CURRENT ADOPTED INTERNATIONAL BUILDING CODE SHALL BE REQUIRED PRIOR TO FINAL SITE APPROVAL.
7. THE CONTRACTOR SHALL BE RESPONSIBLE FOR OBTAINING ALL PERMITS FOR UTILITY, ROAD, AND RIGHT-OF-WAY CONSTRUCTION.
8. THE CONSTRUCTION STORMWATER POLLUTION PREVENTION (SWPP) FACILITIES SHALL BE CONSTRUCTED IN ACCORDANCE WITH THE APPROVED SWPPP PLANS PRIOR TO ANY GRADING OR LAND CLEARING. THESE FACILITIES MUST BE SATISFACTORILY MAINTAINED UNTIL CONSTRUCTION AND LANDSCAPING IS COMPLETED AND THE POTENTIAL FOR ON-SITE EROSION HAS PASSED. SEDIMENT LADEN WATERS SHALL NOT ENTER THE NATURAL DRAINAGE SYSTEM.
9. A CERTIFIED EROSION AND SEDIMENT CONTROL LEAD (CESCL) OR SWPPP SUPERVISOR SHALL BE RESPONSIBLE FOR MAINTAINING THE CONSTRUCTION SWPP FACILITIES, AS OUTLINED IN THE APPROVED SWPPP. OR AS MODIFIED FROM TIME TO TIME. CONTACT INFORMATION FOR THE CESCL (OR SWPPP SUPERVISOR) FOR THE PROJECT SHALL BE GIVEN TO THE CITY.
10. NONCOMPLIANCE WITH THE REQUIREMENTS FOR EROSION CONTROLS, WATER QUALITY AND CLEARING LIMITS MAY RESULT IN REVOCATION OF PROJECT PERMITS, PLAN APPROVAL, AND BOND FORECLOSURES.
11. TRENCH BACKFILL OF NEW UTILITIES AND STORM DRAINAGE FACILITIES SHALL BE COMPACTED TO 95% MAXIMUM DENSITY (MODIFIED PROCTOR) UNDER ROADWAYS AND 90% MAXIMUM DENSITY (MODIFIED PROCTOR) OFF ROADWAYS. COMPACTION SHALL BE PERFORMED IN ACCORDANCE WITH SECTIONS 7-08.3(3) AND 2-03.3(14) D OF THE WSDOT STANDARD SPECIFICATIONS.
12. THE OWNER AND CONTRACTOR SHALL BE RESPONSIBLE FOR LOCATING AND PROTECTING ALL EXISTING UTILITIES PRIOR TO BEGINNING CONSTRUCTION. LOCATION OF UTILITIES SHOWN ON CONSTRUCTION PLANS ARE BASED ON BEST RECORDS AVAILABLE AND ARE SUBJECT TO VARIATION. FOR ASSISTANCE IN UTILITY LOCATION, CALL 811.
13. PRIOR TO CONSTRUCTION THE OWNER AND/OR CONTRACTOR SHALL NOTIFY THE PROJECT ENGINEER AND THE PUBLIC WORKS DIRECTOR WHEN CONFLICTS EXIST BETWEEN THE PLANS AND FIELD CONDITIONS. CONFLICTS SHALL BE RESOLVED (INCLUDING PLAN AND PROFILE REVISIONS) AND RESUBMITTED FOR APPROVAL PRIOR TO PROCEEDING WITH CONSTRUCTION.
14. THE CONTRACTOR SHALL KEEP TWO SETS OF PLANS ON SITE AT ALL TIMES FOR RECORDING AS-BUILT INFORMATION; ONE SET SHALL BE SUBMITTED TO THE PROJECT ENGINEER, AND ONE SET SHALL BE SUBMITTED TO THE CITY AT COMPLETION OF CONSTRUCTION AND PRIOR TO FINAL ACCEPTANCE OF WORK.
15. A GRADING PERMIT ISSUED PURSUANT TO THE CURRENT ADOPTED INTERNATIONAL BUILDING CODE, AND APPROVAL OF THE TEMPORARY EROSION AND SEDIMENTATION CONTROL PLAN SHALL BE OBTAINED FROM THE COMMUNITY DEVELOPMENT DEPARTMENT PRIOR TO ANY ON-SITE GRADING WORK NOT EXPRESSLY EXEMPT BY THE CURRENT ADOPTED INTERNATIONAL BUILDING CODE.

LEGAL DESCRIPTION

PARCEL A: (TAX PARCEL NO. 082405-9045-07)

THAT PORTION OF GOVERNMENT LOT 11, SECTION 8, TOWNSHIP 24 NORTH, RANGE 5 EAST, W.M., IN KING COUNTY, WASHINGTON; TOGETHER WITH THAT PORTION OF THE SOUTHEAST QUARTER OF SECTION 7, TOWNSHIP 24 NORTH, RANGE 5 EAST, W.M., IN KING COUNTY, WASHINGTON, DESCRIBED AS FOLLOWS:
BEGINNING AT THE INTERSECTION OF THE WEST LINE OF GOVERNMENT LOT 11 WITH THE NORTH LINE OF DOYLE-HANSEN ADDITION, ACCORDING TO THE PLAT THEREOF RECORDED IN VOLUME 75 OF PLATS, PAGE 24, RECORDS OF KING COUNTY, WASHINGTON; THENCE SOUTH 89°09'34" EAST ALONG THE NORTH OF SAID DOYLE-HANSEN ADDITION, A DISTANCE OF 253.49 FEET TO THE WEST LINE OF LOT 7 OF CHANNEL CREST, ACCORDING TO THE PLAT THEREOF RECORDED IN VOLUME 72 OF PLATS, PAGE 63, RECORDS OF KING COUNTY, WASHINGTON;
THENCE NORTH 01°12'29" EAST ALONG SAID WEST LINE, A DISTANCE OF 111.48 FEET TO THE SOUTH LINE OF TRACT "A" OF SAID CHANNEL CREST;
THENCE SOUTH 85°39'49" WEST ALONG SAID SOUTH LINE 173.15 FEET TO SOUTHEASTERLY LINE OF LAND CONVEYED TO STATE OF WASHINGTON TOLL BRIDGE AUTHORITY UNDER RECORDING NO. 3032009; THENCE SOUTH 65°24'55" WEST ALONG SAID SOUTHEASTERLY LINE TO THE EASTERLY MARGIN OF EAST MERCER WAY, AS CONVEYED TO KING COUNTY UNDER RECORDING NO. 923897;
THENCE SOUTH 01°02'29" WEST TO THE NORTH LINE OF SAID DOYLE-HANSEN ADDITION; THENCE SOUTH 89°09'34" EAST ALONG SAID NORTH LINE 70.61 FEET TO THE POINT OF BEGINNING.

PARCEL B: (TAX PARCEL NO. 210700-0010-06)

LOTS 1 THROUGH 5, INCLUSIVE, DOYLE-HANSEN ADDITION, ACCORDING TO THE PLAT THEREOF RECORDED IN VOLUME 75 OF PLATS, PAGE 24, RECORDS OF KING COUNTY, WASHINGTON.

PARCEL C: (TAX PARCEL NO. 151560-0010-01)

LOTS 1 THROUGH 7, INCLUSIVE, CHANNEL CREST, ACCORDING TO THE PLAT THEREOF RECORDED IN VOLUME 72 OF PLATS, PAGE 63, RECORDS OF KING COUNTY, WASHINGTON;TOGETHER WITH AN UNDIVIDED 7/8THS INTEREST IN TRACT "A" OF SAID PLAT. SITUATE IN THE COUNTY OF KING, STATE OF WASHINGTON.

IMPERVIOUS LOT COVERAGE (PARCELS B AND C)

EXISTING	PROPOSED
84,021 SF	84,015 SF

VERTICAL DATUM

VERTICAL DATUM = NAVD'88, AS PER DIRECT OBSERVATIONS USING GPS EQUIPMENT ON SEPTEMBER 14TH, 2023.

HORIZONTAL DATUM

HORIZONTAL DATUM = NAD 83/11 (EPOCH 2010).

SITE DATA

SITE ADDRESS:	3700 E MERCER WAY, MERCER ISLAND, WA 98040
TAX PARCEL NUMBER:	0824059045, 2107000010, 1515600010, 151560TRCT
ZONING:	B AND R-9.6

EARTHWORK QUANTITIES[1]

STRIPPING (6")	1,067 CY
EXCAVATION	3,488 CY
FILL	739 CY

NOTE: THE QUANTITIES SHOWN ARE PRELIMINARY ESTIMATES ONLY AND INTENDED FOR MUNICIPAL PERMITTING AND REVIEW FEES. THE CONTRACTOR SHALL IGNORE THESE QUANTITIES, THEY ARE EXCLUDED FROM THE BID DOCUMENT INFORMATION. THESE VOLUMES SHALL NOT BE USED BY THE CONTRACTOR AS A BASIS FOR ANY CONTRACTUAL INFORMATION. THE CONTRACTOR SHALL PREPARE THEIR OWN EARTHWORK QUANTITIES BASED ON THE INFORMATION PROVIDED IN THE CONTRACT DOCUMENTS, INCLUDING BUT NOT LIMITED TO DRAWINGS, SPECIFICATIONS, AND THE GEOTECHNICAL REPORT.

Sheet List Table

C0.00	COVER SHEET
C0.10	OVERALL SITE PLAN
C1.00	OVERALL DEMO PLAN
C1.01	DEMO PLAN
C1.02	DEMO PLAN
C2.00	OVERALL MASS EXCAVATION AND TESC PLAN
C2.01	MASS EXCAVATION AND TESC PLAN
C2.02	MASS EXCAVATION AND TESC PLAN
C2.10	TESC DETAILS
C2.11	TESC DETAILS
C3.00	OVERALL GRADING PLAN
C3.01	GRADING PLAN
C3.02	GRADING PLAN
C3.10	GRADING DETAILS
C3.20	GRADING SECTIONS
C3.21	GRADING SECTIONS
C4.00	OVERALL STORM DRAINAGE PLAN
C4.01	STORM DRAINAGE PLAN
C4.02	STORM DRAINAGE PLAN
C4.10	STORM DRAINAGE DETAILS
C4.20	STORM DRAINAGE PROFILES
C5.00	OVERALL UTILITY PLAN
C5.01	UTILITY PLAN
C5.02	UTILITY PLAN
C5.10	UTILITY DETAILS
C5.11	UTILITY DETAILS
C5.12	UTILITY DETAILS
C5.20	UTILITY PROFILES
C6.00	OVERALL PAVING AND STRIPING PLAN
C6.01	PAVING AND STRIPING PLAN
C6.02	PAVING AND STRIPING PLAN
C6.10	PAVING DETAILS
C6.11	PAVING DETAILS
C7.00	OVERALL FIRE ACCESS PLAN

OWNER: HERZL-NER TAMID
CONSERVATIVE CONGREGATION

ARCHITECT: ANJALI GRANT DESIGN
3427 BEACON AVE S
SEATTLE, WA 98144
CONTACT: ANJALI GRANT
ANJALI@AGRANTDESIGN.COM
206.512.4209

ENGINEER: JACOBSON CONSULTING ENGINEERS
255 S. KING STREET, SUITE #800
SEATTLE, WA 98104
CONTACT: ALAN JACOBSON
ALAN@JACOBSONENGINEERS.COM
206.399.6233

GENERAL CONTRACTOR: EXXEL PACIFIC
11820 NORTHUP WAY SUITE #300
BELLEVUE, WA 98005
CONTACT: SAM STEVENS
SAMS@EXXELPACIFIC.COM
206.715.1782

VICINITY MAP

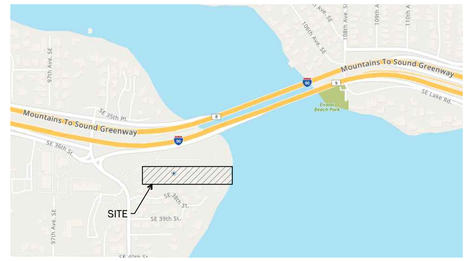

3427 BEACON AVE S
SEATTLE 98144
ANJALI@AGRANTDESIGN.COM
206-512-4209

anjali grant design LLC

REGISTERED PROFESSIONAL ENGINEER
ALAN D. JACOBSON
STATE OF WASHINGTON
43667
01/06/2026

3700 EAST MERCER WAY
BARNABIE POINT PROJECT

NO.	DATE	DESCRIPTION
2	01/06/2026	BLDG PERMIT CORRECTIONS
1	10/22/2025	BLDG PERMIT CORRECTIONS

06 JUNE 2025
BUILDING PERMIT

PROJECT:
COVER SHEET

C0.00

JACOBSON CONSULTING ENGINEERS

10/2/2023 4:17:30 PM C:\Users\EasleyYadav\Documents\RVT_HNT_Central R24_easleyT8558.rvt
© ANJALI GRANT DESIGN LLC ORIGINAL SHEET SIZE: 23" X 34"

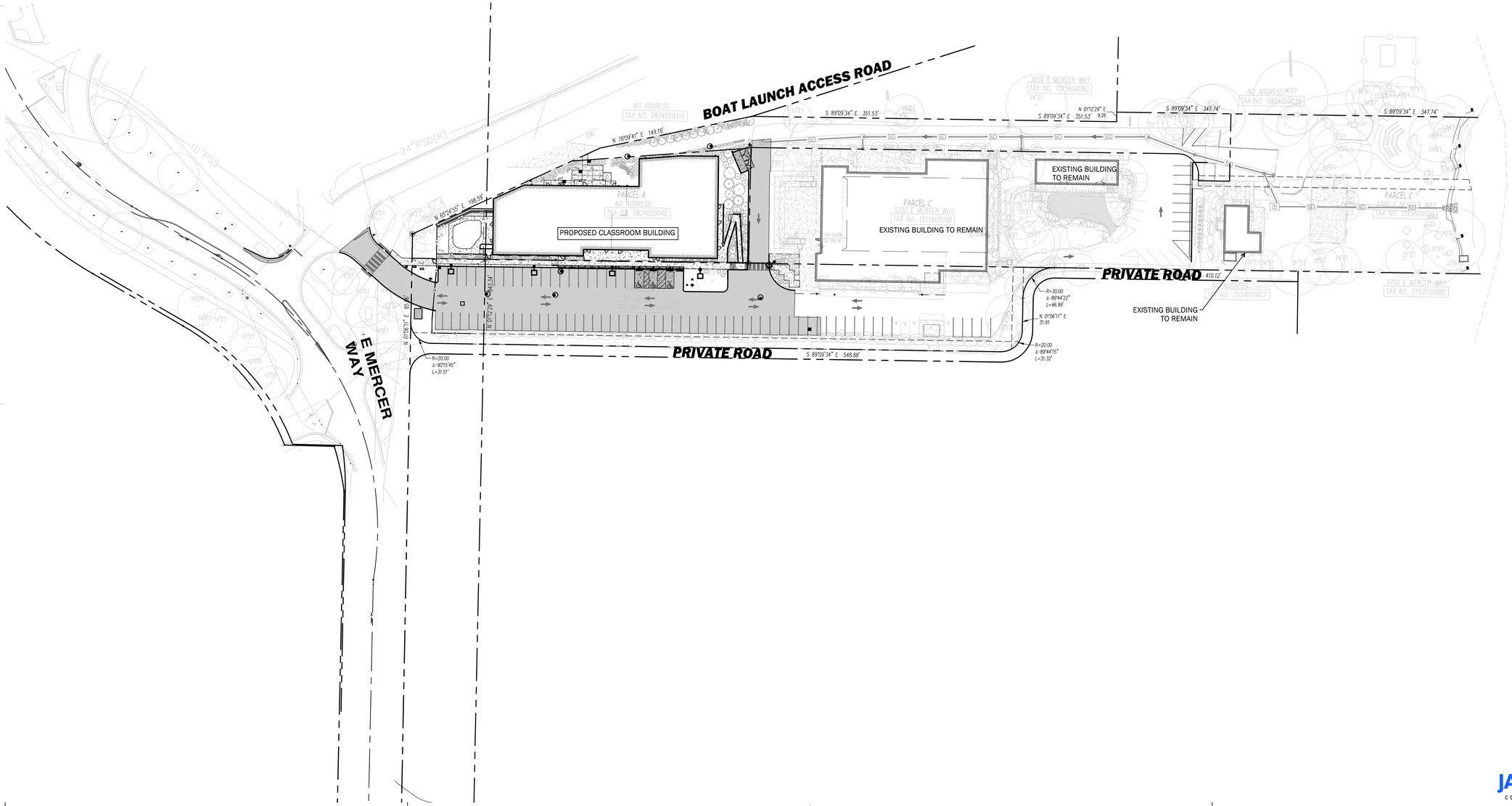

Call before you Dig. 8-1-1 or 1-800-424-5555 UNDERGROUND SERVICE (USA)

811

3427 BEACON AVE S
SEATTLE 98144
ANJALI@AGRANTDESIGN.COM
206-512-4209

anjali grant design LLC

JEFFREY D. JACOBSON
STATE OF WASHINGTON
43667
REGISTERED PROFESSIONAL ENGINEER
01/06/2026

3700 EAST MERCER WAY
BARNABIE POINT PROJECT

NO.	DATE	DESCRIPTION
2	01/06/2026	BLDG PERMIT CORRECTIONS
1	10/22/2025	BLDG PERMIT CORRECTIONS

06 JUNE 2025
BUILDING PERMIT

PROJECT:
OVERALL SITE PLAN

C0.10

JACOBSON
CONSULTING ENGINEERS

11/2/2023 4:17:30 PM C:\Users\EdenAYadav\Documents\HNT_JHNT_Central R24_eaaha7b5r.rvt
© ANJALI GRANT DESIGN LLC ORIGINAL SHEET SIZE: 22" X 34"

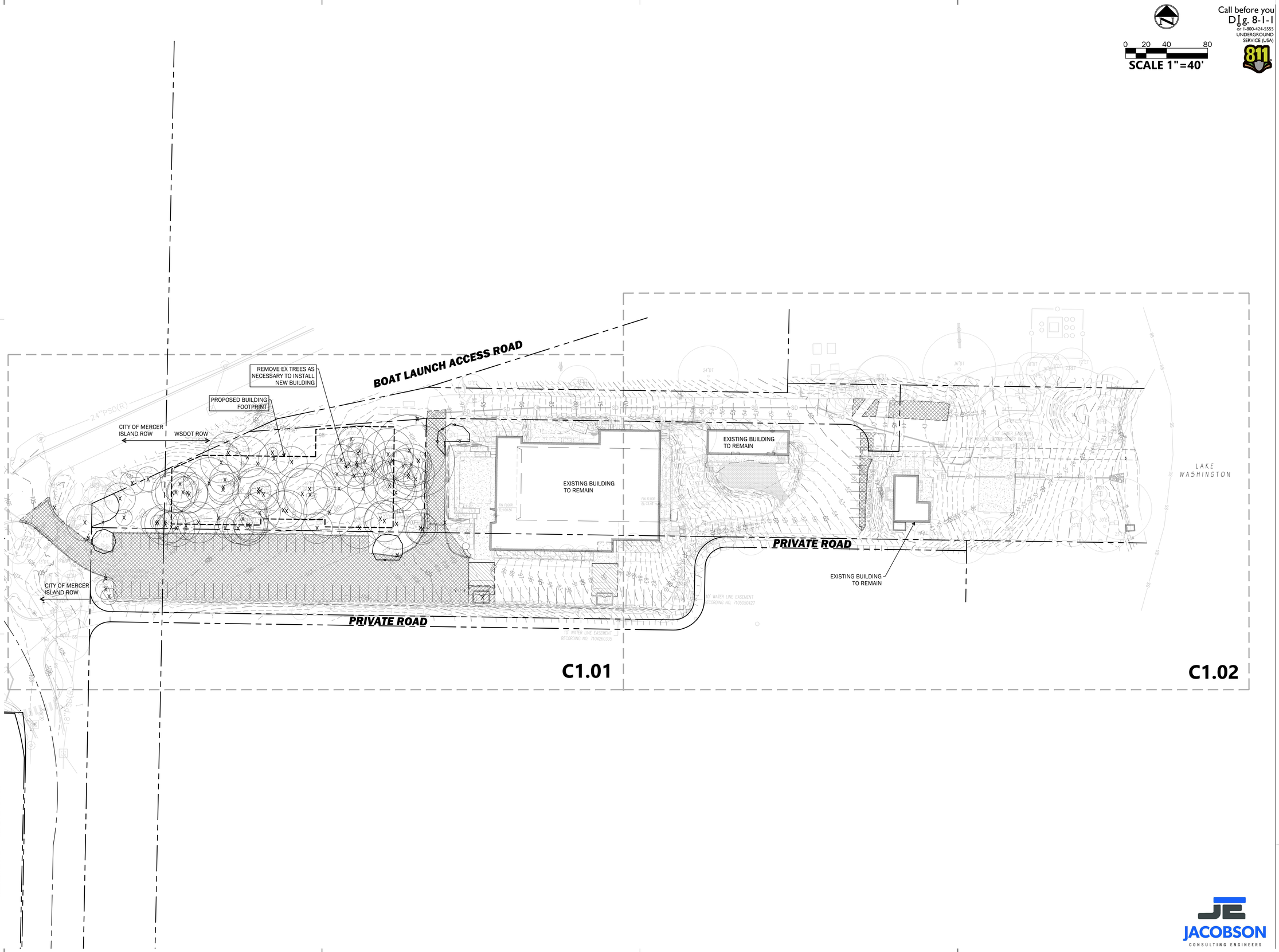

3427 BEACON AVE S
SEATTLE 98144
ANJALI@AGRANTDESIGN.COM
206-512-4209

anjali grant design LLC

JERALD A. JACOBSON
STATE OF WASHINGTON
43667
REGISTERED PROFESSIONAL ENGINEER
01/06/2026

3700 EAST MERCER WAY
BARNABIE POINT PROJECT

NO.	DATE	DESCRIPTION
2	01/06/2026	BLDG PERMIT CORRECTIONS
1	10/22/2025	BLDG PERMIT CORRECTIONS

06 JUNE 2025
BUILDING PERMIT

PROJECT:
OVERALL DEMO PLAN

C1.00

JACOBSON
CONSULTING ENGINEERS

11/2/2023 4:17:30 PM C:\Users\Elisha\Vidaw\Documents\HNT_HNT_Central R24_eisha.rt85SR.rvt
© ANJALI GRANT DESIGN LLC ORIGINAL SHEET SIZE: 22" X 34"

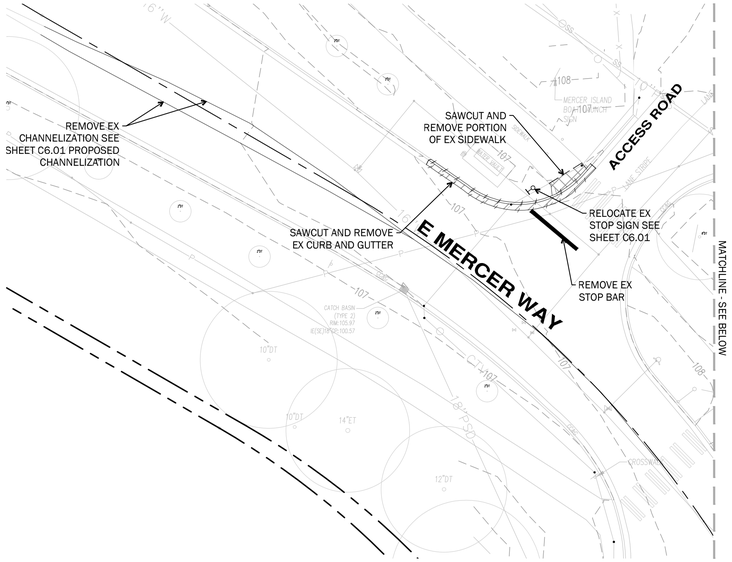

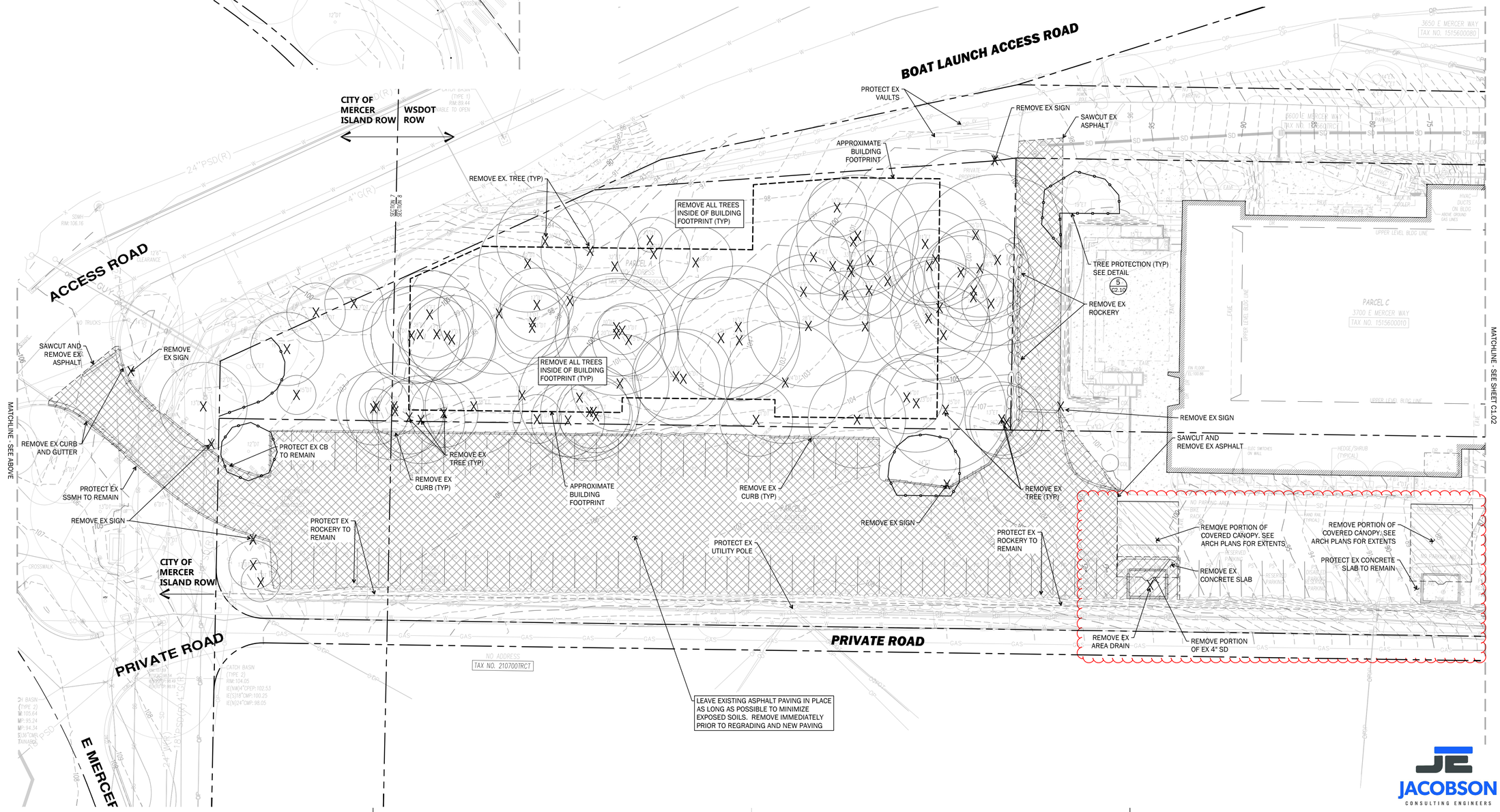

Call before you Dig. 8-1-1 or 1-800-424-5555 UNDERGROUND SERVICE (USA)

811

0 10 20 40

SCALE 1"=20'

LEGEND

- PROPERTY LINE — N 79°33'06" E – 46.81'
- SAWCUT LINE
- REMOVE CURBING
- REMOVE ASPHALT PAVEMENT
- REMOVE CONCRETE PAVEMENT
- REMOVE TREE(S)
- (VEG) TREE PROTECTION

3427 BEACON AVE S
SEATTLE 98144
ANJALI@AGRANTDESIGN.COM
206-512-4209

anjali grant design LLC

JEFFREY D. JACOBSON — STATE OF WASHINGTON — 43667 — REGISTERED PROFESSIONAL ENGINEER

01/06/2026

3700 EAST MERCER WAY
BARNABIE POINT PROJECT

NO.	DATE	DESCRIPTION
2	01/06/2026	BLDG PERMIT CORRECTIONS
1	10/22/2025	BLDG PERMIT CORRECTIONS

06 JUNE 2025

BUILDING PERMIT

PROJECT:

DEMO PLAN

C1.01

JACOBSON CONSULTING ENGINEERS

11/2/2023 4:17:30 PM C:\Users\EastAsiaWorx\Documents\RIT_UNIT_Central R24_easha760R.rvt
ORIGINAL SHEET SIZE: 22" X 34"
© ANJALI GRANT DESIGN LLC

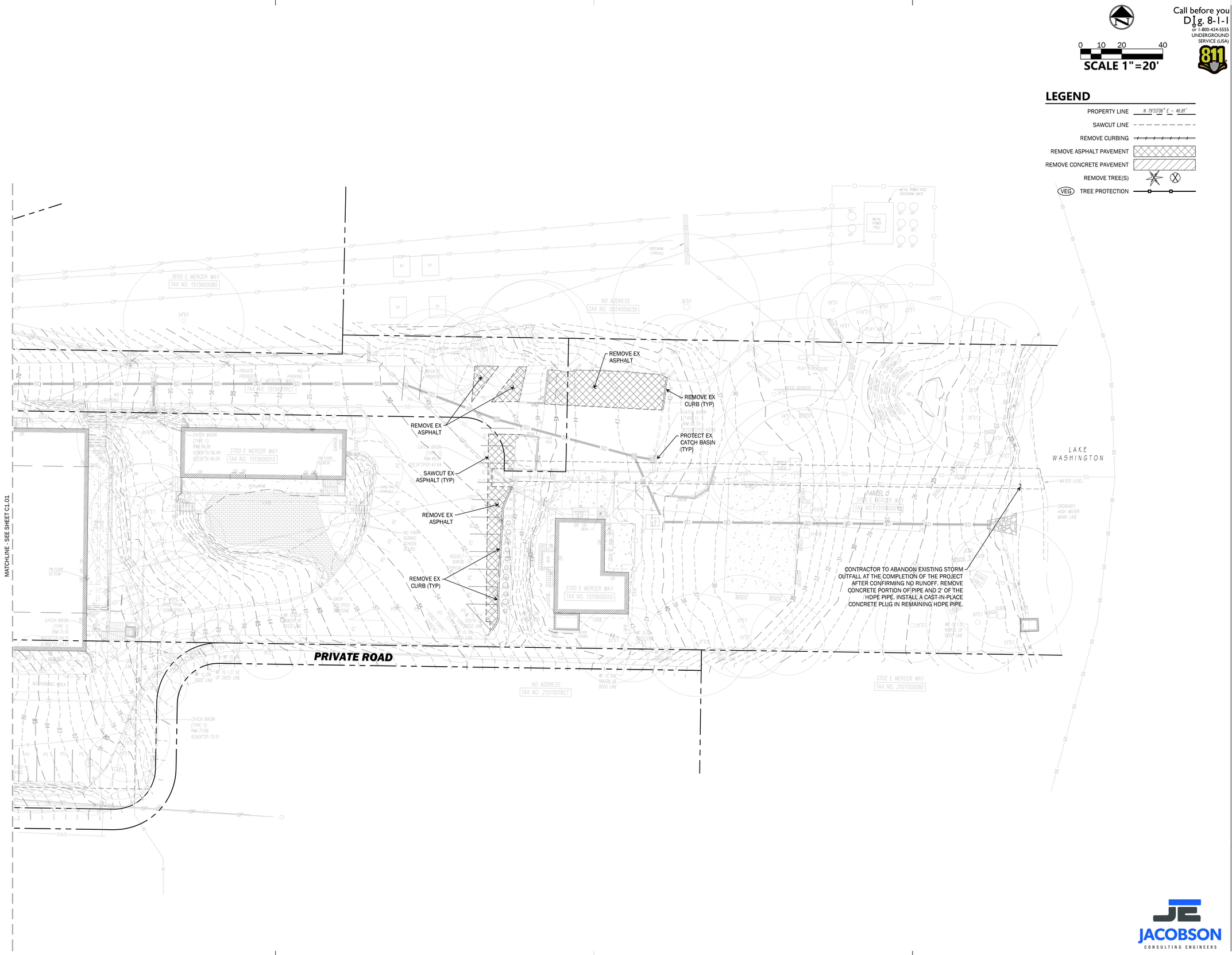

3427 BEACON AVE S
SEATTLE 98144
ANJALI@AGRANTDESIGN.COM
206-512-4209

anjali grant design LLC

JERALD A. JACOBSON
STATE OF WASHINGTON
43667
REGISTERED PROFESSIONAL ENGINEER
01/06/2026

3700 EAST MERCER WAY
BARNABIE POINT PROJECT

NO.	DATE	DESCRIPTION
2	01/06/2026	BLDG PERMIT CORRECTIONS
1	10/22/2025	BLDG PERMIT CORRECTIONS

06 JUNE 2025
BUILDING PERMIT

PROJECT:
DEMO PLAN

C1.02

JACOBSON
CONSULTING ENGINEERS

11/2/2023 4:17:30 PM C:\Users\Esaha\Yadav\Documents\HNT_HNT_Central R24_esaha1T65SR.rvt
© ANJALI GRANT DESIGN LLC ORIGINAL SHEET SIZE: 22" X 34"

3427 BEACON AVE S
SEATTLE 98144
ANJALI@AGRANTDESIGN.COM
206-512-4209

Call before you Dig. 8-1-1
or 1-800-424-5555
UNDERGROUND SERVICE (USA)

0 20 40 80
SCALE 1"=40'

PER (BS) 3306.1 IBC, PEDESTRIANS SHALL BE PROTECTED DURING CONSTRUCTION, REMODELING AND DEMOLITION ACTIVITIES AS REQUIRED BY THIS CHAPTER AND TABLE 3306.1. SIGNS SHALL BE PROVIDED TO DIRECT PEDESTRIAN TRAFFIC.

TABLE 3306.1
PROTECTION OF PEDESTRIANS

HEIGHT OF CONSTRUCTION	DISTANCE FROM CONSTRUCTION TO LOT LINE	TYPE OF PROTECTION REQUIRED
8 FEET OR LESS	LESS THAN 5 FEET	CONSTRUCTION RAILINGS
	5 FEET OR MORE	NONE
MORE THAN 8 FEET	LESS THAN 5 FEET	BARRIER AND COVERED WALKWAY
	5 FEET OR MORE, BUT NOT MORE THAN ONE-FOURTH THE HEIGHT OF CONSTRUCTION	BARRIER AND COVERED WALKWAY
	5 FEET OR MORE, BUT BETWEEN ONE-FOURTH AND ONE-HALF THE HEIGHT OF CONSTRUCTION	BARRIER
	5 FEET OR MORE, BUT EXCEEDING ONE-HALF THE HEIGHT OF CONSTRUCTION	NONE

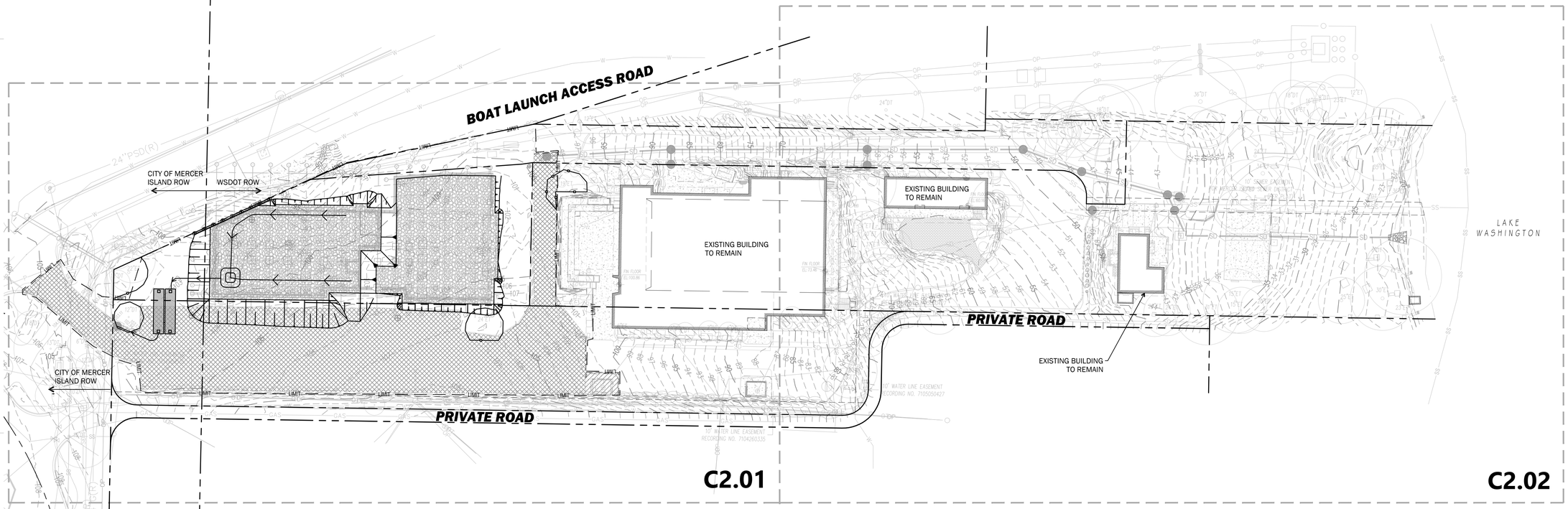

anjali grant design LLC

JERALD A. JACOBSON
STATE OF WASHINGTON
43667
REGISTERED PROFESSIONAL ENGINEER
01/06/2026

3700 EAST MERCER WAY
BARNABIE POINT PROJECT

NO.	DATE	DESCRIPTION
2	01/06/2026	BLDG PERMIT CORRECTIONS
1	10/22/2025	BLDG PERMIT CORRECTIONS

06 JUNE 2025
BUILDING PERMIT

PROJECT:
OVERALL MASS EXCAVATION AND TESC PLAN

C2.00

JACOBSON
CONSULTING ENGINEERS

11/2/2023 4:17:30 PM C:\Users\EashaYadav\Documents\HNT_Central R24_eashaTBS58.rvt
© ANJALI GRANT DESIGN LLC ORIGINAL SHEET SIZE: 22" X 34"

PER [BS] 3306.1 IBC, PEDESTRIANS SHALL BE PROTECTED DURING CONSTRUCTION, REMODELING AND DEMOLITION ACTIVITIES AS REQUIRED BY THIS CHAPTER AND TABLE 3306.1. SIGNS SHALL BE PROVIDED TO DIRECT PEDESTRIAN TRAFFIC.

TABLE 3306.1
PROTECTION OF PEDESTRIANS

HEIGHT OF CONSTRUCTION	DISTANCE FROM CONSTRUCTION TO LOT LINE	TYPE OF PROTECTION REQUIRED
8 FEET OR LESS	LESS THAN 5 FEET	CONSTRUCTION RAILINGS
	5 FEET OR MORE	NONE
MORE THAN 8 FEET	LESS THAN 5 FEET	BARRIER AND COVERED WALKWAY
	5 FEET OR MORE, BUT NOT MORE THAN ONE-FOURTH THE HEIGHT OF CONSTRUCTION	BARRIER AND COVERED WALKWAY
	5 FEET OR MORE, BUT BETWEEN ONE-FOURTH AND ONE-HALF THE HEIGHT OF CONSTRUCTION	BARRIER
	5 FEET OR MORE, BUT EXCEEDING ONE-HALF THE HEIGHT OF CONSTRUCTION	NONE

Call before you Dig. 8-1-1
or 1-800-424-5555
UNDERGROUND SERVICE (USA)

0 10 20 40
SCALE 1"=20'

LEGEND

VEG TREE PROTECTION
SF SILT FENCE
INLET PROTECTION
BOE = BOTTOM OF EXCAVATION SEE DETAIL 4/C2.11

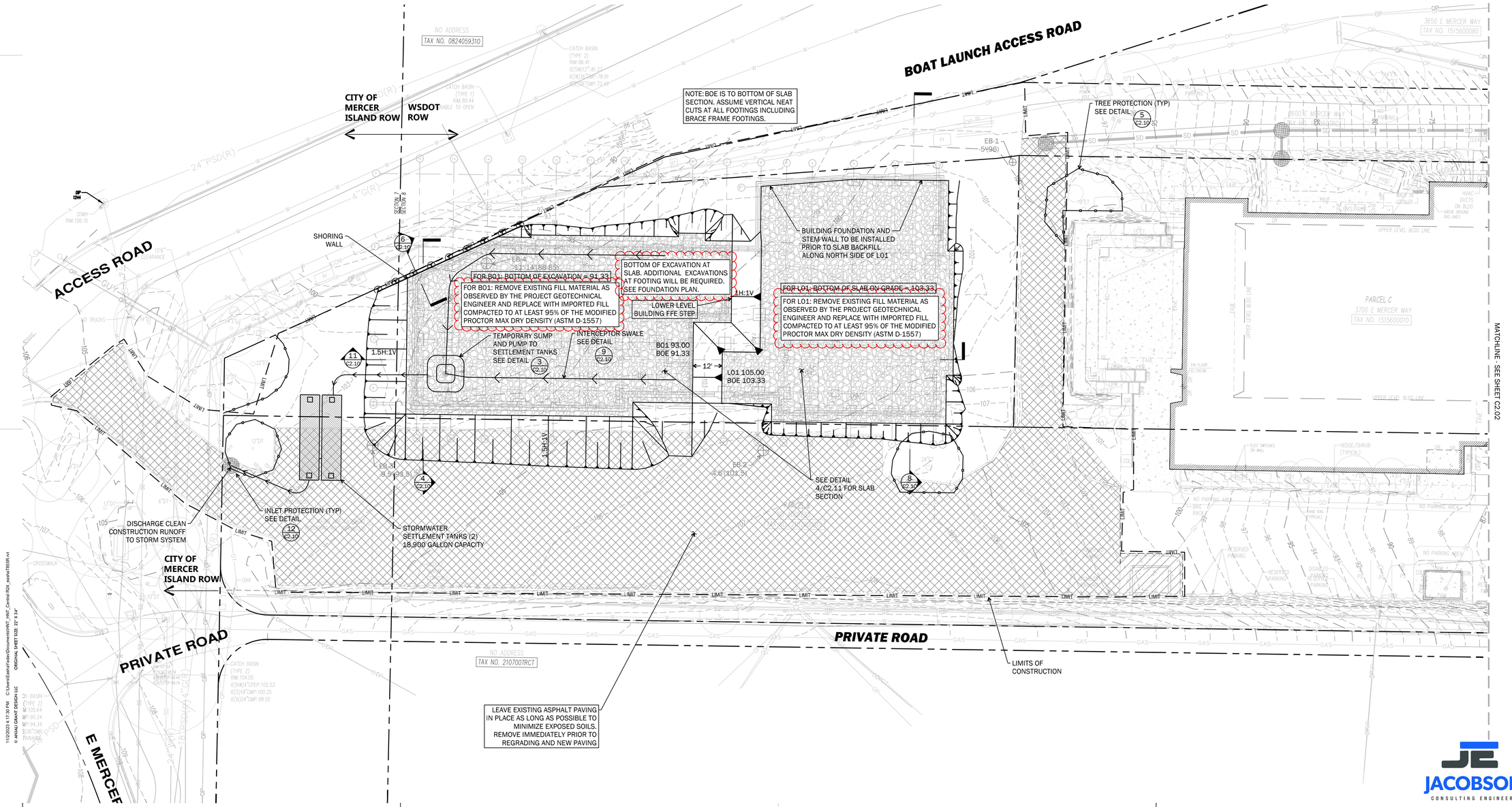

3427 BEACON AVE S
SEATTLE 98144
ANJALI@AGRANTDESIGN.COM
206-512-4209

anjali grant design LLC

JERALD A. JACOBSON
STATE OF WASHINGTON
43667
REGISTERED PROFESSIONAL ENGINEER
01/06/2026

3700 EAST MERCER WAY
BARNABIE POINT PROJECT

NO.	DATE	DESCRIPTION
2	01/06/2026	BLDG PERMIT CORRECTIONS
1	10/22/2025	BLDG PERMIT CORRECTIONS

06 JUNE 2025
BUILDING PERMIT

PROJECT:
MASS EXCAVATION AND TESC PLAN

C2.01

JACOBSON
CONSULTING ENGINEERS

11/2/2023 4:17:30 PM C:\Users\Esaha\Yadav\Documents\HNT_HNT_Central R24_esahaT6558.rvt
© ANJALI GRANT DESIGN LLC ORIGINAL SHEET SIZE: 22" X 34"

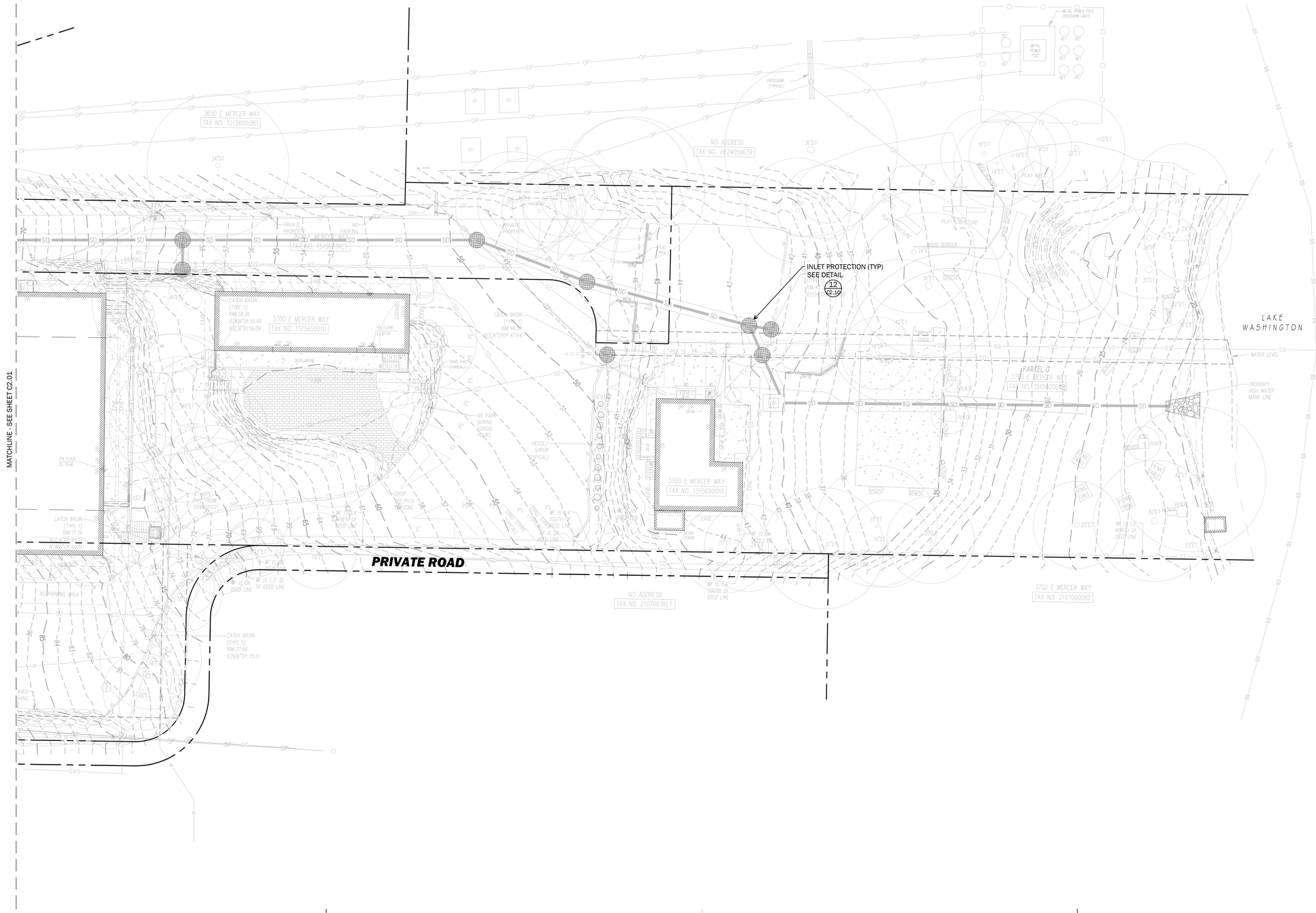

0 10 20 40

SCALE 1"=20'

Call before you Dig. 8-1-1 or 1-800-424-5555 UNDERGROUND SERVICE (USA)

811

LEGEND

- VEG — TREE PROTECTION
- SF — SILT FENCE
- INLET PROTECTION

3427 BEACON AVE S
SEATTLE 98144
ANJALI@AGRANTDESIGN.COM
206-512-4209

anjali grant design LLC

JEFFREY D. A. JACOBSON
STATE OF WASHINGTON
43667
REGISTERED PROFESSIONAL ENGINEER
01/06/2026

3700 EAST MERCER WAY
BARNABIE POINT PROJECT

NO.	DATE	DESCRIPTION
2	01/06/2026	BLDG PERMIT CORRECTIONS
1	10/22/2025	BLDG PERMIT CORRECTIONS

06 JUNE 2025
BUILDING PERMIT

PROJECT:
MASS EXCAVATION AND TESC PLAN

C2.02

JACOBSON CONSULTING ENGINEERS

11/2/2023 4:17:30 PM C:\Users\EamonYoder\Documents\INT_I_INT_Central R24_eamonTESSR.rvt
© ANJALI GRANT DESIGN LLC ORIGINAL SHEET SIZE: 22" X 34"

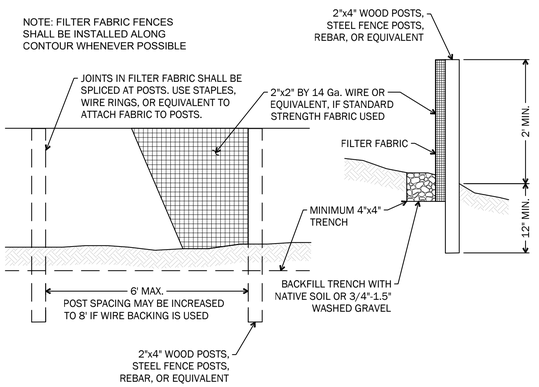

NTS **Silt Fence** 1

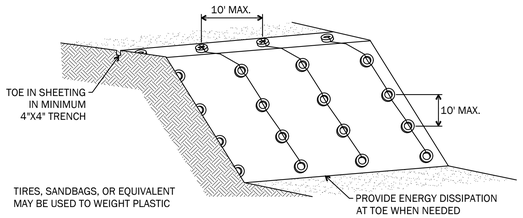

NTS **Plastic Sheeting** 2

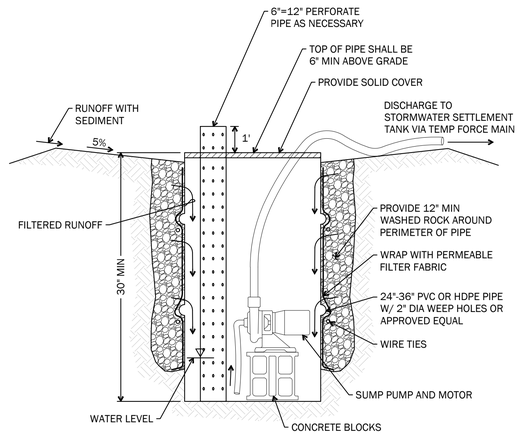

NTS **Temporary Sump and Pump** 3

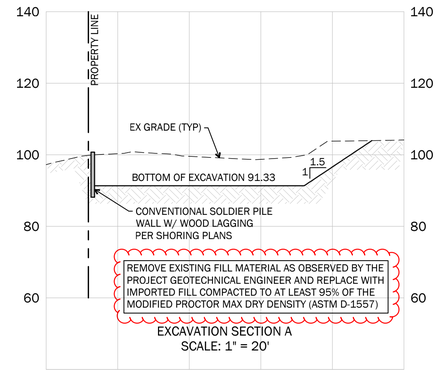

Scale: 1"=20' **Section A** 4

3427 BEACON AVE S
SEATTLE 98144
ANJALI@AGRANTDESIGN.COM
206-512-4209

anjali grant design LLC

JEFFREY D. JACOBSON — STATE OF WASHINGTON — 43667 — REGISTERED PROFESSIONAL ENGINEER
01/06/2026

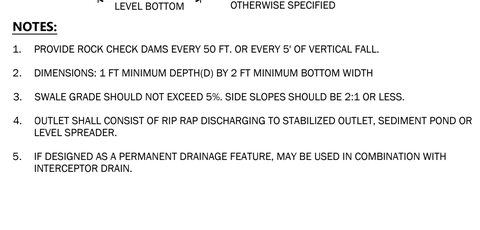

NOTES:

1. A MINIMUM 4 FOOT HIGH TEMPORARY FENCE MUST BE PLACED AT THE DRIP LINE OF TREES PRIOR TO THE COMMENCEMENT OF CLEARING OR EARTHWORK. NOTIFY THE CLEARING AND GRADING INSPECTOR TO GET BOTH THE INSPECTION AND WRITTEN APPROVAL OF FLAGGED TREES AND TEMPORARY PROTECTION FENCING AROUND TREES TO BE SAVED PER THE APPROVED CLEARING AND GRADING PLAN.
2. NO STOCKPILING OF MATERIAL AND NO VEHICULAR TRAFFIC ARE ALLOWED WITHIN THE LIMITS OF THE TEMPORARY FENCING. FILLING, EXCAVATION, AND CLEARING MUST BE ACCOMPLISHED BY HAND METHODS ONLY.
3. ROOTS OF TREES TO BE SAVED WHICH ARE DAMAGED DURING CONSTRUCTION MUST BE TREATED IN THE FOLLOWING WAY: FOR DAMAGED ROOTS OVER 1" IN DIAMETER, MAKE A CLEAN, STRAIGHT CUT TO REMOVE THE DAMAGED PORTION OF THE ROOT. ALL EXPOSED ROOTS WILL BE TEMPORARILY COVERED WITH DAMP BURLAP OR WOOD SHAVINGS TO PREVENT DRYING AND COVERED WITH EARTH AS SOON AS POSSIBLE.
4. SEE TREE PROTECTION AND TESC PLANS FOR LOCATION OF EXISTING TREES TO RECEIVE TEMPORARY FENCING.
5. SEE SPECIFICATIONS FOR PRUNING, WATERING, AND OTHER MAINTENANCE REQUIREMENTS

NTS **Tree Protection** 5

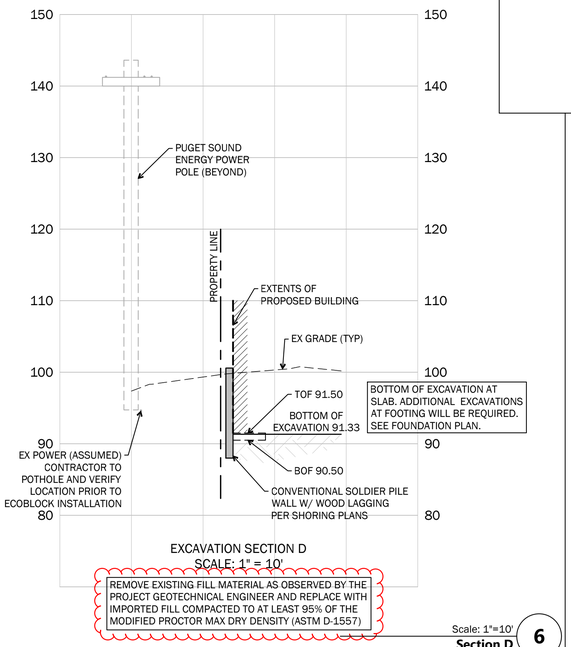

Scale: 1"=10' **Section D** 6

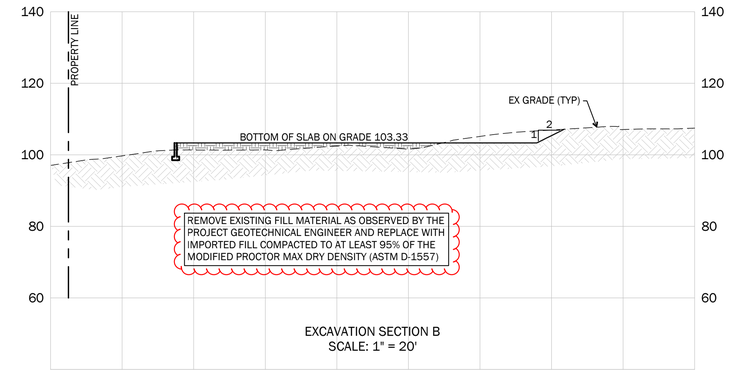

Scale: 1"=20' **Section B** 8

3700 EAST MERCER WAY
BARNABIE POINT PROJECT

NO.	DATE	DESCRIPTION
2	01/06/2026	BLDG PERMIT CORRECTIONS
1	10/22/2025	BLDG PERMIT CORRECTIONS

06 JUNE 2025

BUILDING PERMIT

PROJECT:

TESC DETAILS

C2.10

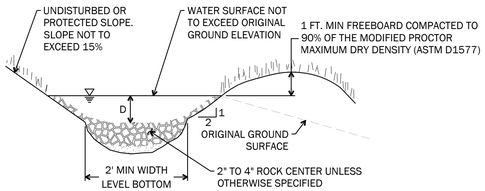

NOTES:

1. PROVIDE ROCK CHECK DAMS EVERY 50 FT. OR EVERY 5' OF VERTICAL FALL.
2. DIMENSIONS: 1 FT MINIMUM DEPTH(D) BY 2 FT MINIMUM BOTTOM WIDTH
3. SWALE GRADE SHOULD NOT EXCEED 5%. SIDE SLOPES SHOULD BE 2:1 OR LESS.
4. OUTLET SHALL CONSIST OF RIP RAP DISCHARGING TO STABILIZED OUTLET, SEDIMENT POND OR LEVEL SPREADER.
5. IF DESIGNED AS A PERMANENT DRAINAGE FEATURE, MAY BE USED IN COMBINATION WITH INTERCEPTOR DRAIN.

NTS **Interceptor Swale** 9

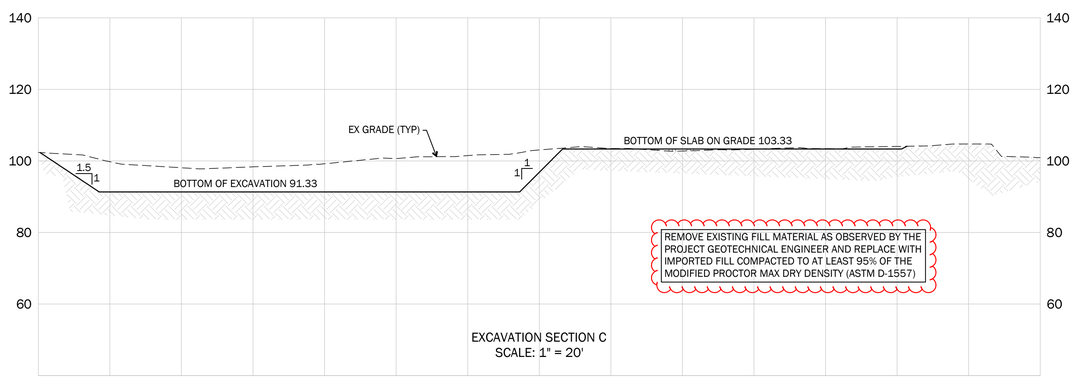

Scale: 1"=20' **Section C** 11

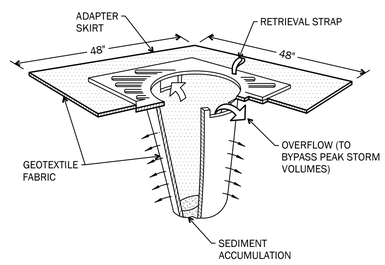

INLET PROTECTION NOTE:
FILTERS SHALL BE INSPECTED AFTER EACH STORM EVENT AND CLEANED OR REPLACES WHEN 1/3 FULL.

NTS **Inlet Protection** 12

JACOBSON CONSULTING ENGINEERS

11/2/2023 4:17:39 PM C:\Users\EllaHyVeiler\Documents\HNT_UNT_Central R24_asahe116SR.rvt
© ANJALI GRANT DESIGN LLC ORIGINAL SHEET SIZE: 22" X 34"

3427 BEACON AVE S
SEATTLE 98144
ANJALI@AGRANTDESIGN.COM
206-512-4209

anjali grant design LLC

NTS
Not Used 1

NTS
Not Used 2

NTS
Not Used 3

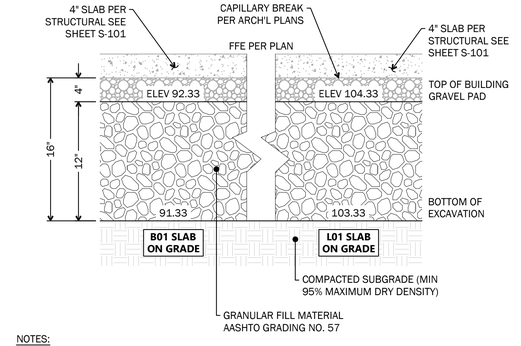

NOTES:

1. ALL SURFACES COMPACTED TO 95%

NTS
Gravel Building Pad 4



NTS
Not Used 5

NTS
Not Used 6

NTS
Not Used 7

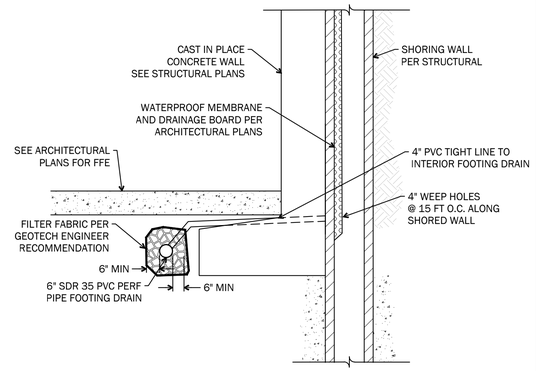

NTS
Shored Wall Footing Drain 8

NTS
Not Used 9

NTS
Not Used 10

NTS
Not Used 11

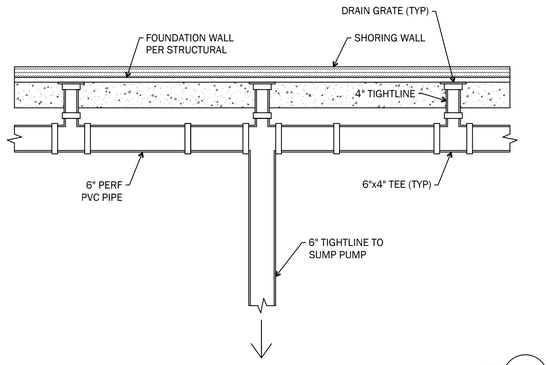

NTS
Footing Drain Connection - Plan View 12

JACOBSON
CONSULTING ENGINEERS

3700 EAST MERCER WAY
BARNABIE POINT PROJECT

NO.	DATE	DESCRIPTION
	01/06/2026	BLDG PERMIT CORRECTIONS
	10/22/2025	BLDG PERMIT CORRECTIONS

06 JUNE 2025
BUILDING PERMIT

PROJECT:
TESC DETAILS

C2.11

11/2/2023 4:17:30 PM C:\Users\EashaYadav\Documents\HNT_Central R24_eashaTB55R.rvt
© ANJALI GRANT DESIGN LLC ORIGINAL SHEET SIZE: 22" X 34"

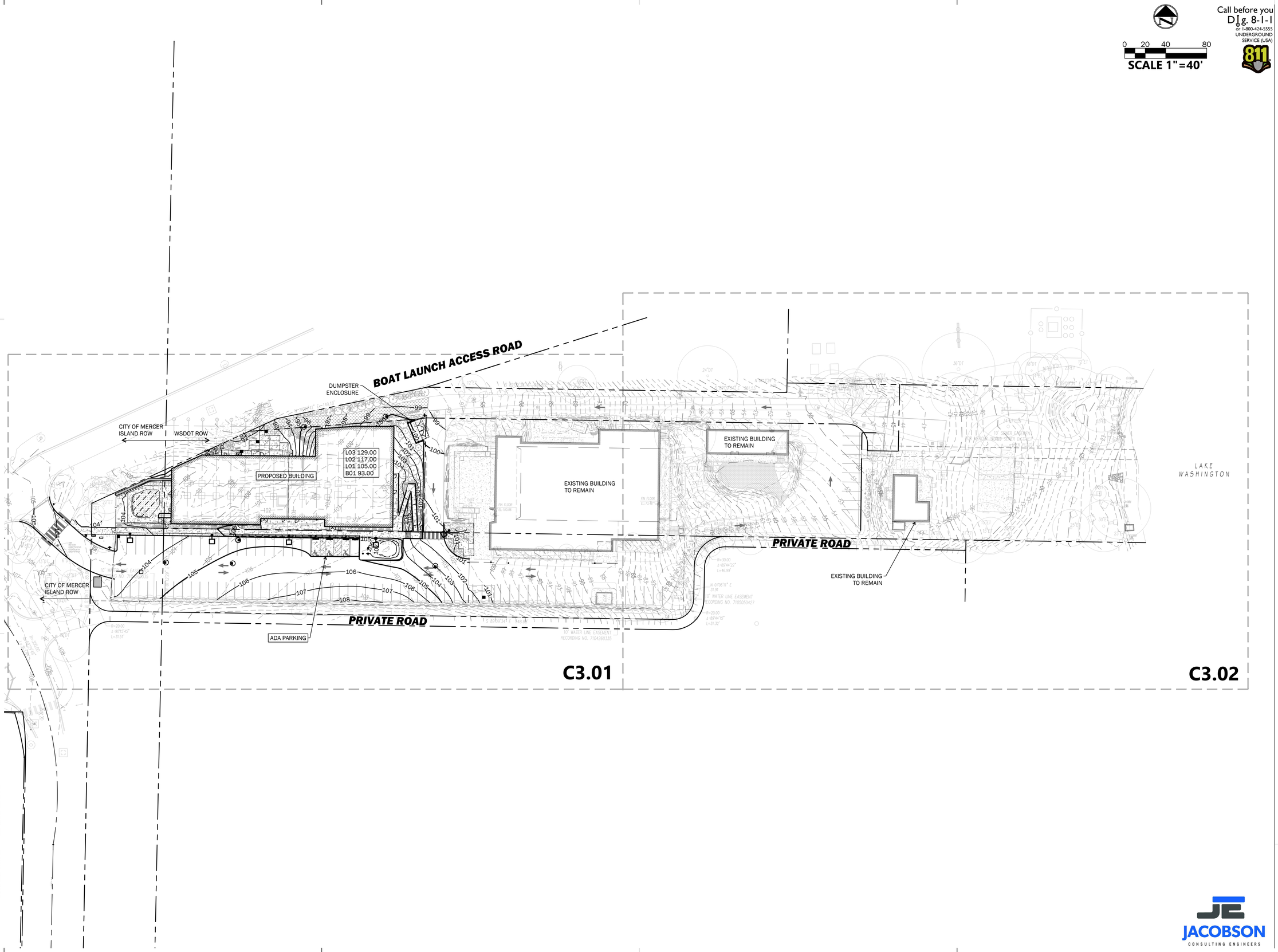

3427 BEACON AVE S
SEATTLE 98144
ANJALI@AGRANTDESIGN.COM
206-512-4209

anjali grant design LLC

JERALD A. JACOBSON
STATE OF WASHINGTON
43667
REGISTERED PROFESSIONAL ENGINEER
01/06/2026

3700 EAST MERCER WAY
BARNABIE POINT PROJECT

NO.	DATE	DESCRIPTION
2	01/06/2026	BLDG PERMIT CORRECTIONS
1	10/22/2025	BLDG PERMIT CORRECTIONS

06 JUNE 2025
BUILDING PERMIT

PROJECT:
OVERALL GRADING PLAN

C3.00

JACOBSON
CONSULTING ENGINEERS

11/2/2023 4:17:30 PM C:\Users\EashaYadav\Documents\INT_INT_Central R24_eashaT650R.rvt
© ANJALI GRANT DESIGN LLC ORIGINAL SHEET SIZE: 22" X 34"

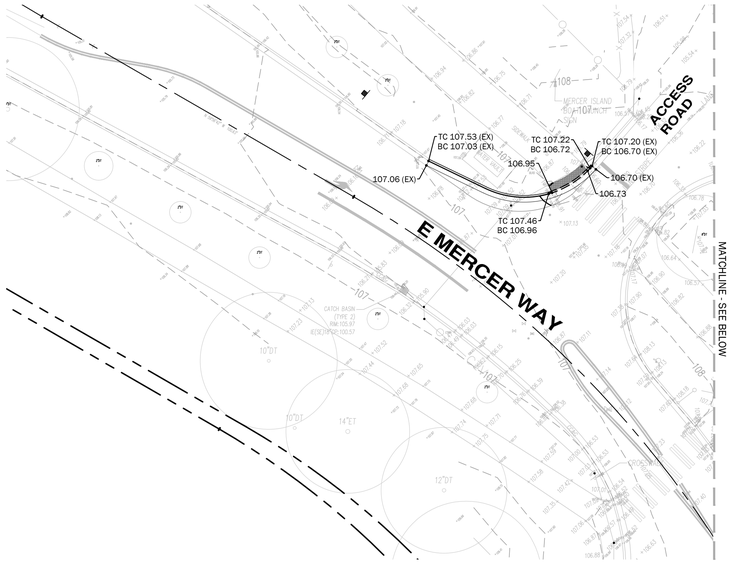

Call before you Dig. 8-1-1 or 1-800-424-5555 UNDERGROUND SERVICE (USA)

0 10 20 40

SCALE 1"=20'

LEGEND

PROPERTY LINE — N 79°33'06" E – 46.81'

CONTOUR (INDEX) — 110

CONTOUR — 109

SPOT ELEVATION — 109.36 / TC 109.86 BC 109.36

GRADE BREAK — RIDGE / VALLEY

3427 BEACON AVE S
SEATTLE 98144
ANJALI@AGRANTDESIGN.COM
206-512-4209

anjali grant design LLC

JEFFREY D. JACOBSON — STATE OF WASHINGTON — 43667 — REGISTERED PROFESSIONAL ENGINEER

01/06/2026

3700 EAST MERCER WAY
BARNABIE POINT PROJECT

NO.	DATE	DESCRIPTION
2	01/06/2026	BLDG PERMIT CORRECTIONS
1	10/22/2025	BLDG PERMIT CORRECTIONS

06 JUNE 2025
BUILDING PERMIT

PROJECT:
GRADING PLAN

C3.01

JACOBSON CONSULTING ENGINEERS

11/2/2023 4:17:30 PM C:\Users\Earth\Yadav\Documents\NHT_HNT_Central R24_earthaTB50R.rvt
© ANJALI GRANT DESIGN LLC ORIGINAL SHEET SIZE: 22" X 34"

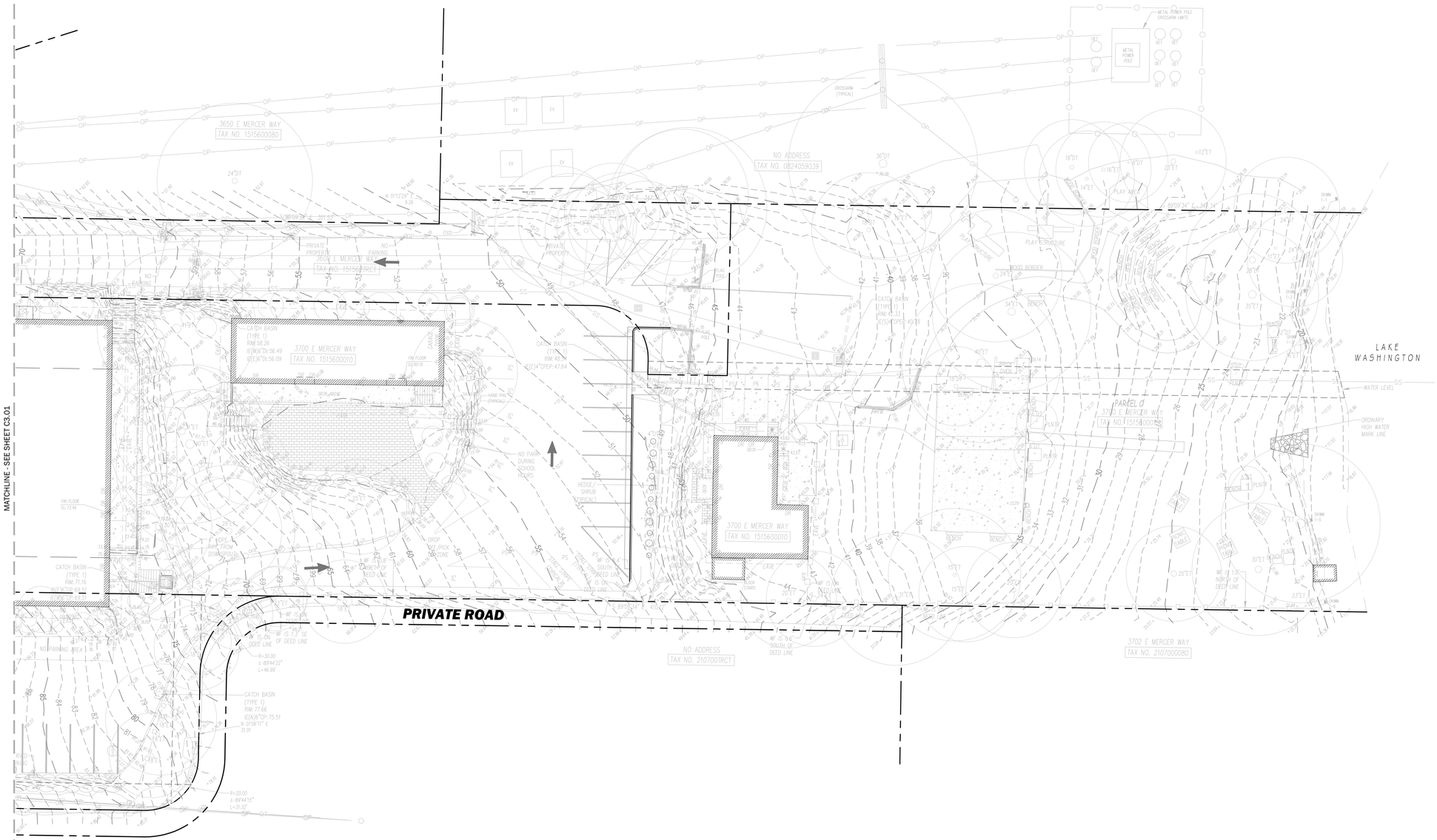

Call before you Dig. 8-1-1 or 1-800-424-5555 UNDERGROUND SERVICE (USA)

0 10 20 40

SCALE 1"=20'

LEGEND

PROPERTY LINE — N 79°33'06" E – 46.81'

CONTOUR (INDEX) — 110

CONTOUR — 109

SPOT ELEVATION — 109.36 / TC 109.86 BC 109.36

GRADE BREAK — RIDGE / VALLEY

3427 BEACON AVE S
SEATTLE 98144
ANJALI@AGRANTDESIGN.COM
206-512-4209

anjali grant design LLC

JEFFREY D. A. JACOBSON — STATE OF WASHINGTON — 43667 — REGISTERED PROFESSIONAL ENGINEER

01/06/2026

3700 EAST MERCER WAY
BARNABIE POINT PROJECT

NO.	DATE	DESCRIPTION
2	01/06/2026	BLDG PERMIT CORRECTIONS
1	10/22/2025	BLDG PERMIT CORRECTIONS

06 JUNE 2025
BUILDING PERMIT

PROJECT:
GRADING PLAN

C3.02

JACOBSON CONSULTING ENGINEERS

11/22/2023 4:17:30 PM C:\Users\Easha\Desktop\Documents\PRT_JNT_Central R24_easha\T805R.rvt
© ANJALI GRANT DESIGN LLC ORIGINAL SHEET SIZE: 22" X 34"

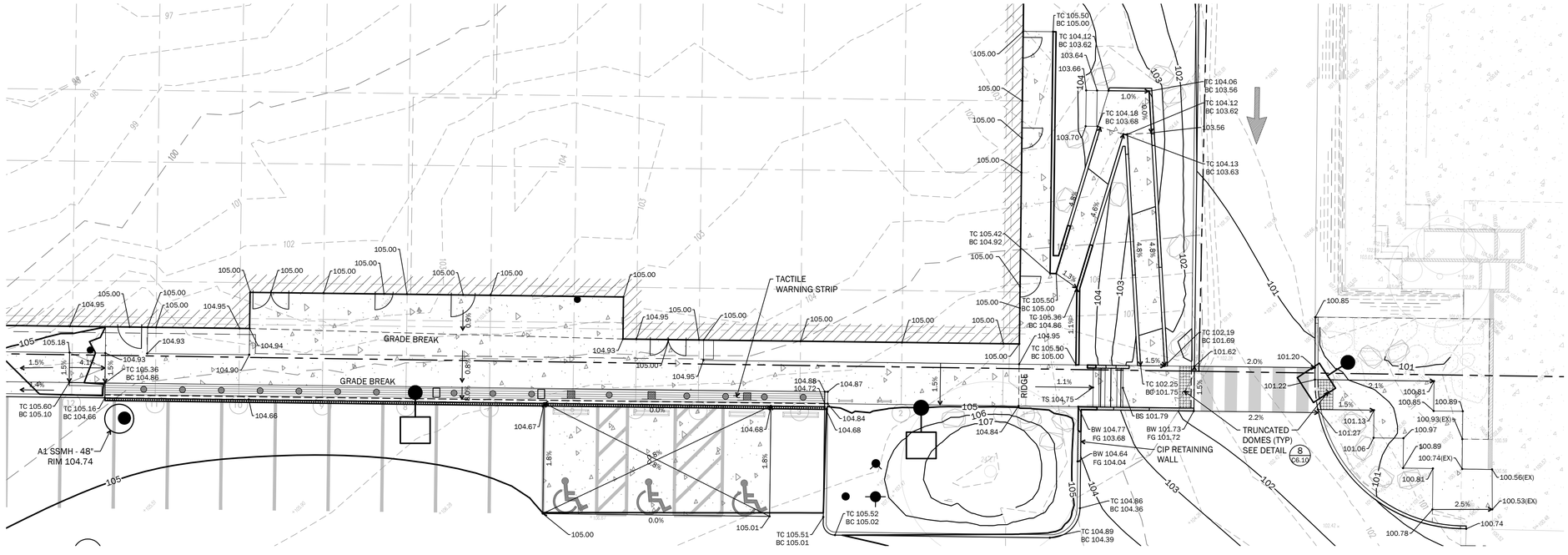

Scale: 1"=10'
Detailed Grading Enlargement 4

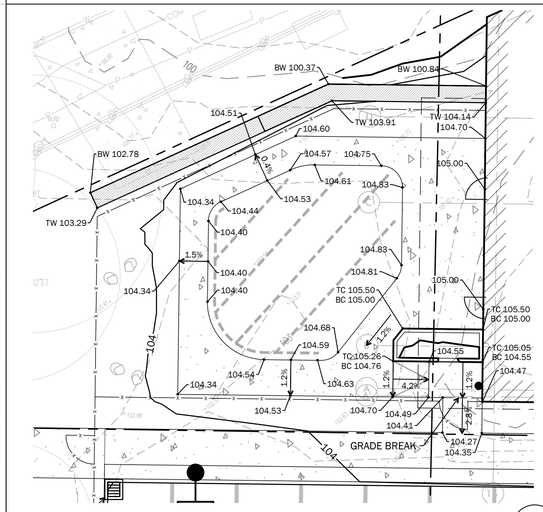

Scale: 1"=10'
Detailed Play Area Enlargement 5

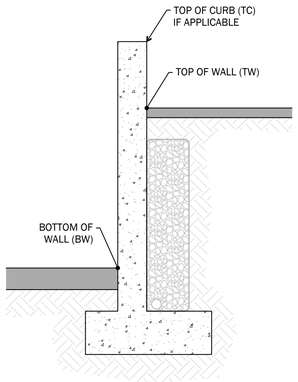

SEE ACTUAL WALL CONSTRUCTION DETAILS FOR SPECIFIC WALL INFORMATION. THIS DETAIL IS INTEND TO DEPICT GRADING CONDITIONS AT AND ADJACENT TO THE WALLS

NTS
Typical Wall Grading 6

NTS
Not Used 7

3427 BEACON AVE S
SEATTLE 98144
ANJALI@AGRANTDESIGN.COM
206-512-4209

anjali grant design LLC

JERALD A. JACOBSON
STATE OF WASHINGTON
43667
REGISTERED PROFESSIONAL ENGINEER
01/06/2026

3700 EAST MERCER WAY
BARNABIE POINT PROJECT

NO.	DATE	DESCRIPTION
2	01/06/2026	BLDG PERMIT CORRECTIONS
1	10/22/2025	BLDG PERMIT CORRECTIONS

06 JUNE 2025
BUILDING PERMIT

PROJECT:
GRADING DETAILS

C3.10

JACOBSON
CONSULTING ENGINEERS

11/2/2023 4:17:30 PM C:\Users\EashaYadav\Documents\HNT_HNT_Central R24_eashaTB55R.rvt
© ANJALI GRANT DESIGN LLC ORIGINAL SHEET SIZE: 22" X 34"

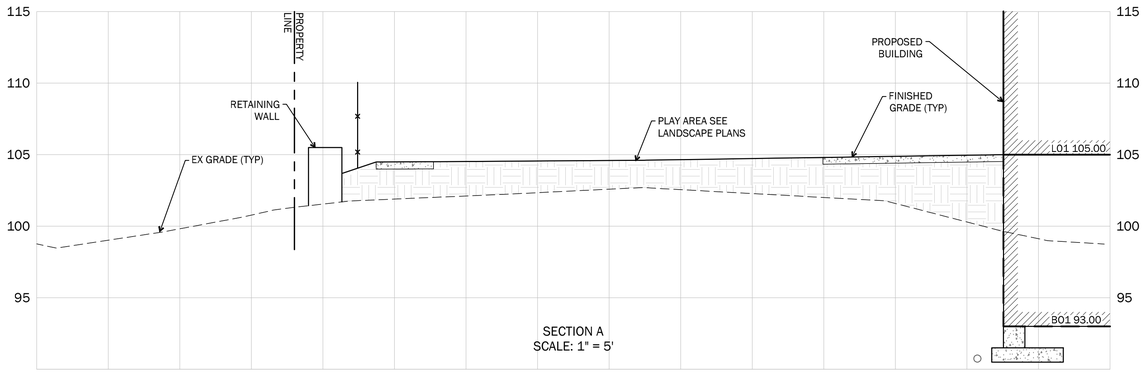

SECTION A
SCALE: 1" = 5'

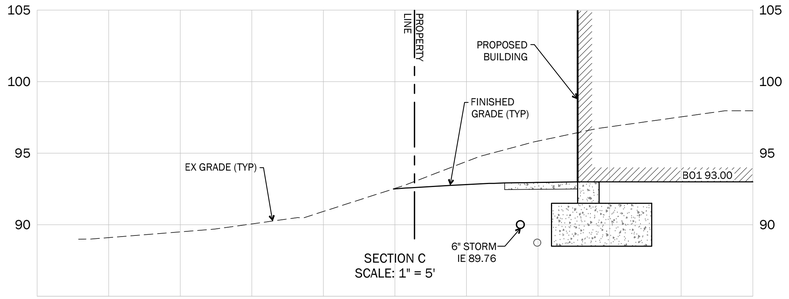

SECTION C
SCALE: 1" = 5'

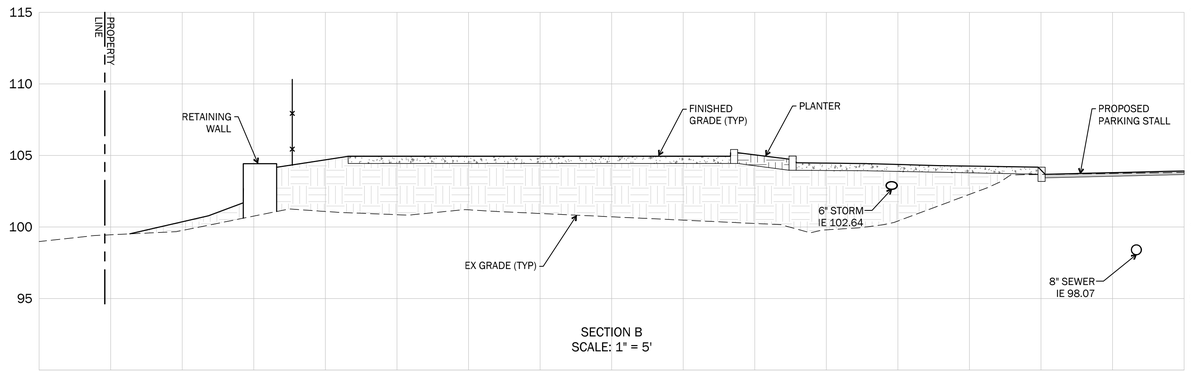

SECTION B
SCALE: 1" = 5'

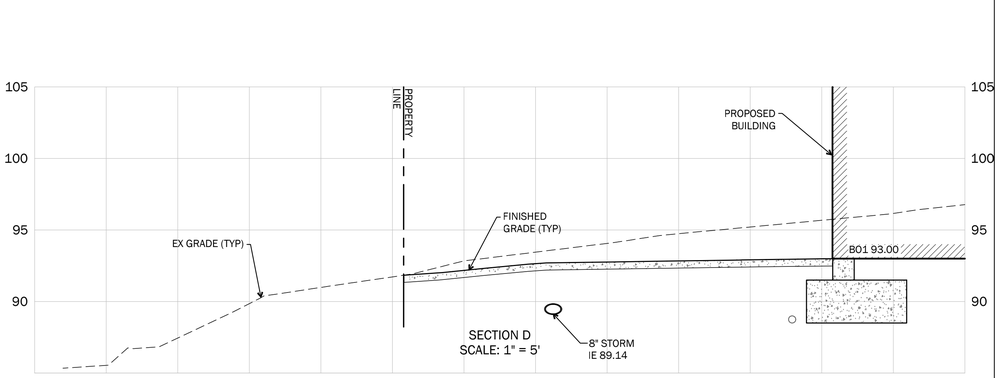

SECTION D
SCALE: 1" = 5'

3427 BEACON AVE S
SEATTLE 98144
ANJALI@AGRANTDESIGN.COM
206-512-4209

anjali grant design LLC

JEFFREY D. JACOBSON
STATE OF WASHINGTON
43667
REGISTERED
PROFESSIONAL ENGINEER
01/06/2026

3700 EAST MERCER WAY
BARNABIE POINT PROJECT

NO.	DATE	DESCRIPTION
2	01/06/2026	BLDG PERMIT CORRECTIONS
1	10/22/2025	BLDG PERMIT CORRECTIONS

06 JUNE 2025
BUILDING PERMIT

PROJECT:
GRADING SECTIONS

C3.20

JACOBSON
CONSULTING ENGINEERS

11/2/2023 4:17:30 PM C:\Users\EdaharVader\Documents\INT_INT_Central R24_eadaharT850R.rvt
© ANJALI GRANT DESIGN LLC ORIGINAL SHEET SIZE: 22" X 34"

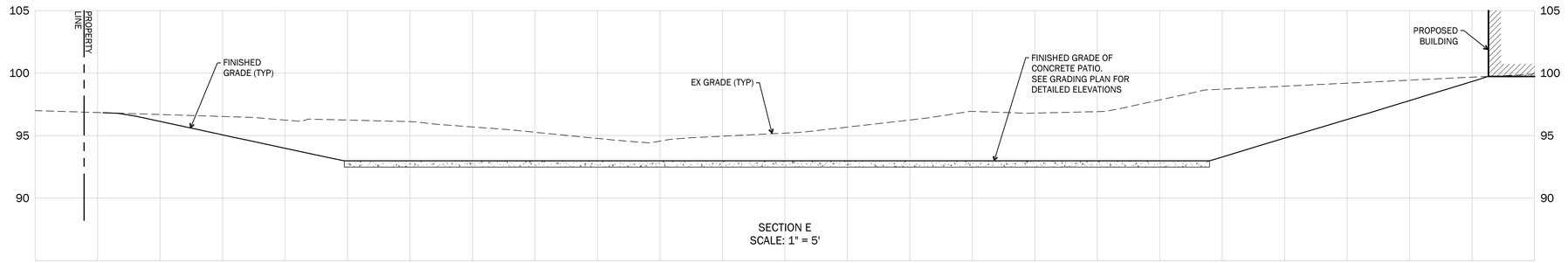

SECTION E
SCALE: 1" = 5'

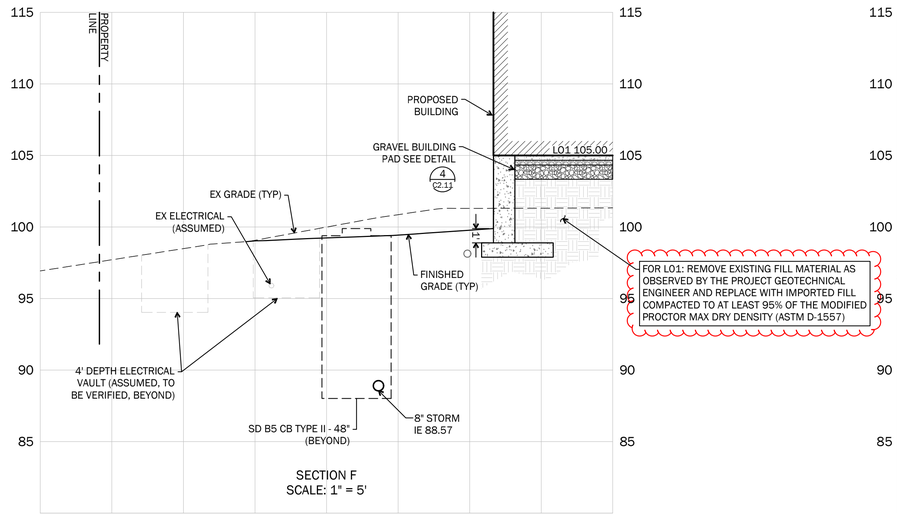

SECTION F
SCALE: 1" = 5'

FOR L01: REMOVE EXISTING FILL MATERIAL AS OBSERVED BY THE PROJECT GEOTECHNICAL ENGINEER AND REPLACE WITH IMPORTED FILL COMPACTED TO AT LEAST 95% OF THE MODIFIED PROCTOR MAX DRY DENSITY (ASTM D-1557)

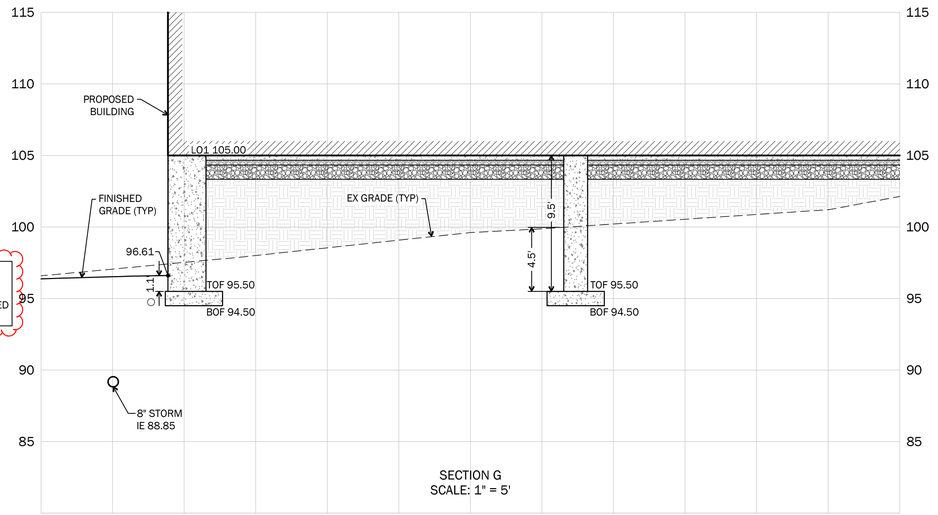

SECTION G
SCALE: 1" = 5'

3427 BEACON AVE S
SEATTLE 98144
ANJALI@AGRANTDESIGN.COM
206-512-4209

anjali grant design LLC

JEFFREY D. JACOBSON
STATE OF WASHINGTON
43667
REGISTERED PROFESSIONAL ENGINEER
01/06/2026

3700 EAST MERCER WAY
BARNABIE POINT PROJECT

NO.	DATE	DESCRIPTION
2	01/06/2026	BLDG PERMIT CORRECTIONS
1	10/22/2025	BLDG PERMIT CORRECTIONS

06 JUNE 2025
BUILDING PERMIT

PROJECT:
GRADING SECTIONS

C3.21

JACOBSON
CONSULTING ENGINEERS

11/2/2023 4:17:30 PM C:\Users\EdahnYoder\Documents\HNT_HNT_Central R24_eadahn785GR.rvt
© ANJALI GRANT DESIGN LLC ORIGINAL SHEET SIZE: 22" X 34"

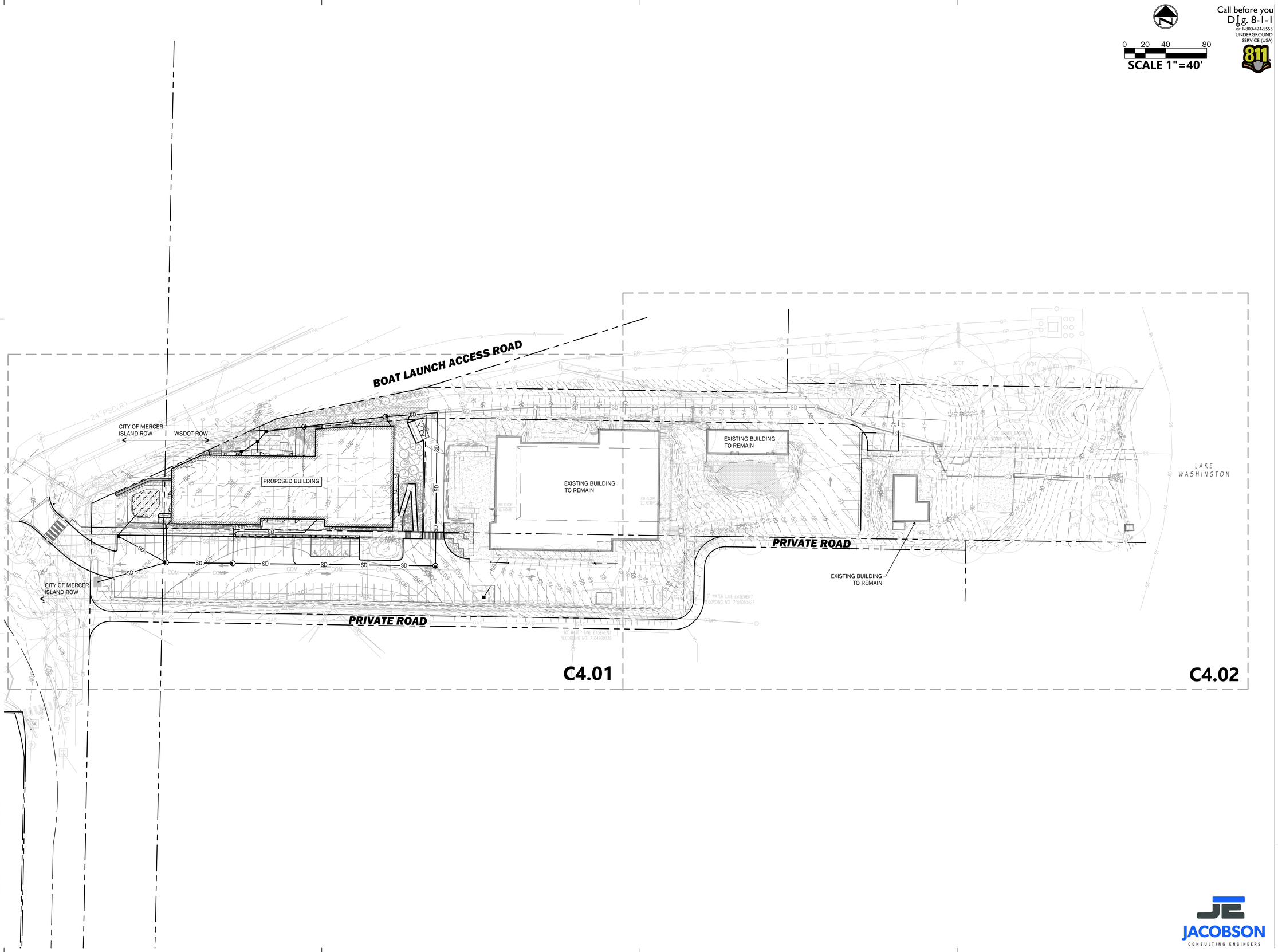

3427 BEACON AVE S
SEATTLE 98144
ANJALI@AGRANTDESIGN.COM
206-512-4209

anjali grant design LLC

JERALD A. JACOBSON
STATE OF WASHINGTON
43667
REGISTERED PROFESSIONAL ENGINEER
01/06/2026

3700 EAST MERCER WAY
BARNABIE POINT PROJECT

NO.	DATE	DESCRIPTION
2	01/06/2026	BLDG PERMIT CORRECTIONS
1	10/22/2025	BLDG PERMIT CORRECTIONS

06 JUNE 2025
BUILDING PERMIT

PROJECT:
OVERALL STORM DRAINAGE PLAN

C4.00

JACOBSON
CONSULTING ENGINEERS

11/2/2023 4:17:30 PM C:\Users\EashaYadav\Documents\INT_INT_Central R24_eashaTB55R.rvt
© ANJALI GRANT DESIGN LLC ORIGINAL SHEET SIZE: 22" X 34"

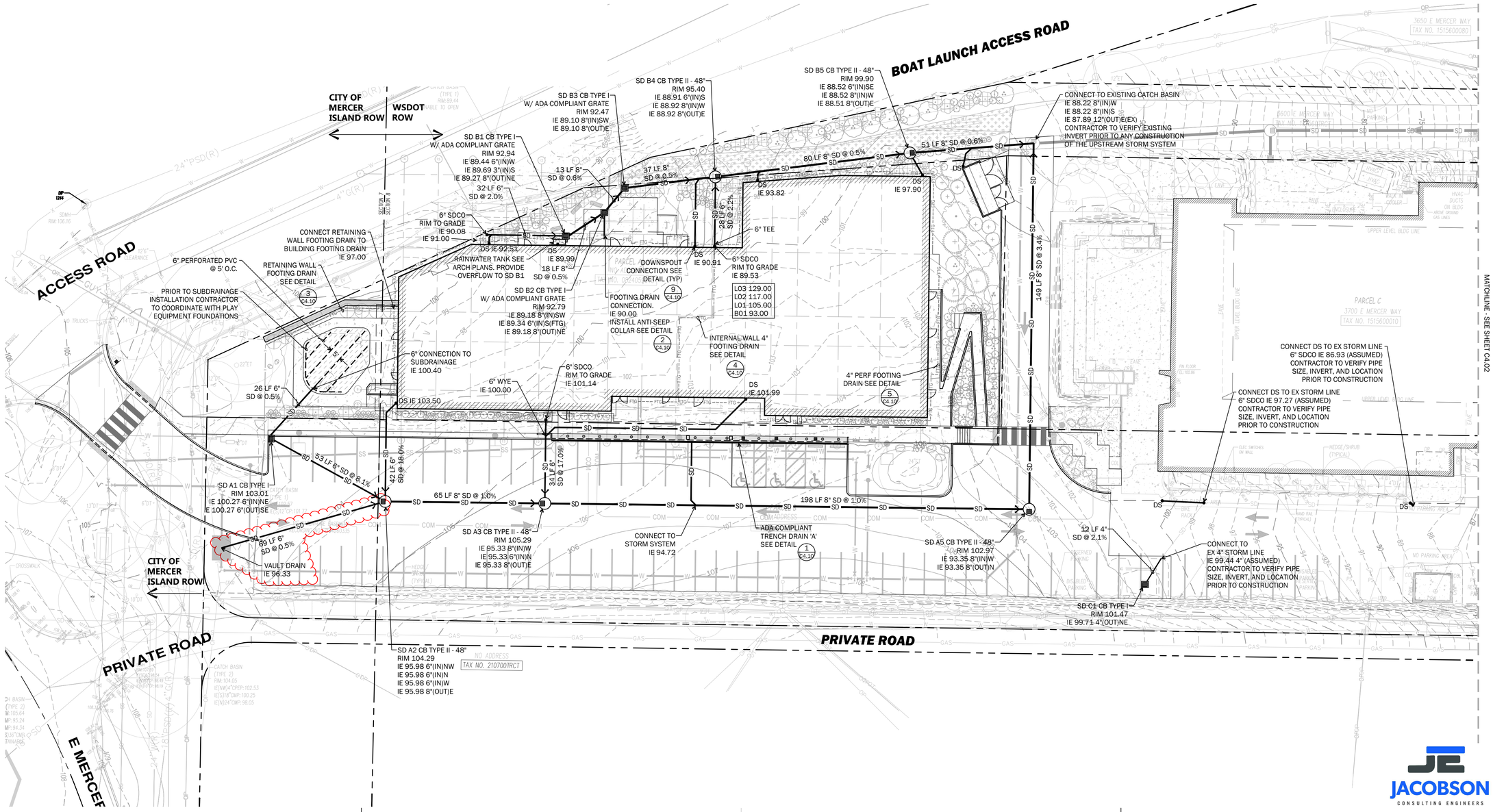

N

0 10 20 40

SCALE 1"=20'

Call before you Dig. 8-1-1 or 1-800-424-5555 UNDERGROUND SERVICE (USA)

811

LEGEND

- PROPERTY LINE — N 79°33'06" E – 46.81'
- CONTOUR (INDEX) — 110
- CONTOUR — 109
- STORM DRAINAGE PIPE — SD
- FRENCH DRAIN
- CB TYPE 2/CB TYPE 1/ AREA DRAIN/SDCO

3427 BEACON AVE S
SEATTLE 98144
ANJALI@AGRANTDESIGN.COM
206-512-4209

anjali grant design LLC

GERALD D. JACOBSON
STATE OF WASHINGTON
43667
REGISTERED PROFESSIONAL ENGINEER
01/06/2026

3700 EAST MERCER WAY
BARNABIE POINT PROJECT

NO.	DATE	DESCRIPTION
2	01/06/2026	BLDG PERMIT CORRECTIONS
1	10/22/2025	BLDG PERMIT CORRECTIONS

06 JUNE 2025

BUILDING PERMIT

PROJECT:

STORM DRAINAGE PLAN

C4.01

JACOBSON CONSULTING ENGINEERS

11/2/2023 4:17:30 PM C:\Users\Eamon\Desktop\Documents\NXT_UNIT_Central R24_eastsk75ESR.rvt
© ANJALI GRANT DESIGN LLC ORIGINAL SHEET SIZE: 22" X 34"

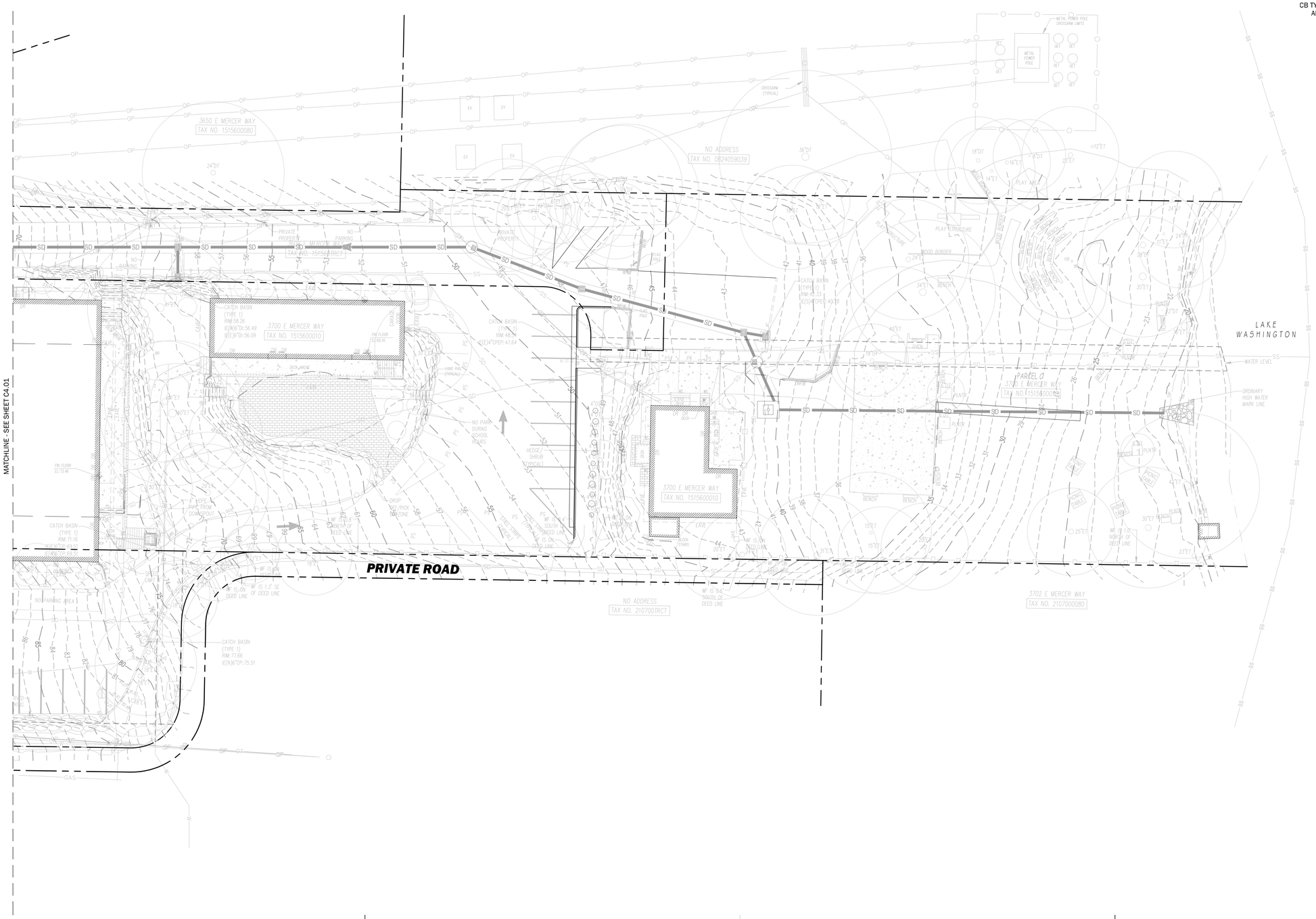

Call before you Dig. 8-1-1 or 1-800-424-5555 UNDERGROUND SERVICE (USA)

811

3427 BEACON AVE S
SEATTLE 98144
ANJALI@AGRANTDESIGN.COM
206-512-4209

anjali grant design LLC

JEFFREY D. A. JACOBSON
STATE OF WASHINGTON
43667
REGISTERED PROFESSIONAL ENGINEER
01/06/2026

3700 EAST MERCER WAY
BARNABIE POINT PROJECT

NO.	DATE	DESCRIPTION
2	01/06/2026	BLDG PERMIT CORRECTIONS
1	10/22/2025	BLDG PERMIT CORRECTIONS

06 JUNE 2025
BUILDING PERMIT

PROJECT:
STORM DRAINAGE PLAN

C4.02

JACOBSON
CONSULTING ENGINEERS

11/2/2023 4:17:30 PM C:\Users\EamonY.radar\Documents\INT_I_INT_Central R24_eastsTREGR.rvt
© ANJALI GRANT DESIGN LLC ORIGINAL SHEET SIZE: 22" X 34"

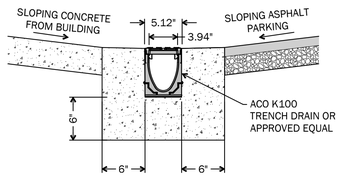

NOTES:

1. TRENCH DRAIN WILL BE SLOPED ON EITHER SIDE TO THE CENTER OF THE TRENCH DRAIN TO THE K1 SERIES 900 CATCH BASIN
2. TRENCH DRAIN GRATE TO BE IRON AGE 'ARGO'

ACO K100 TRENCH DRAIN NUMBERS	SHALLOW DEPTH	DEEP DEPTH
- K1-1 TO K1-17 - K1 SERIES 900 CATCH BASIN - K1-17 TO K1-1	3.94"	7.28"

NTS
Trench Drain 1

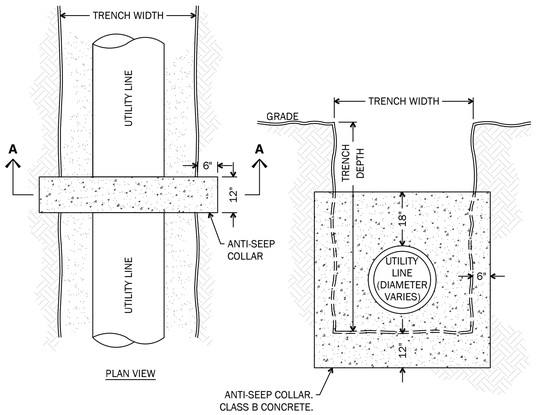

NTS
Anti-Seep Collar 2

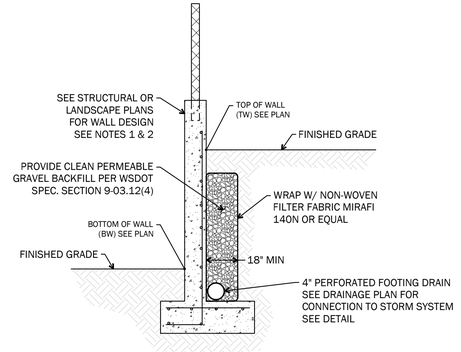

NOTES:

1. FOR WALLS HIGHER THAN 4-FT, SEE STRUCTURAL PLANS
2. FOR WALLS LESS THAN 4-FT, SEE LANDSCAPE PLANS

NTS
Wall Drain 3

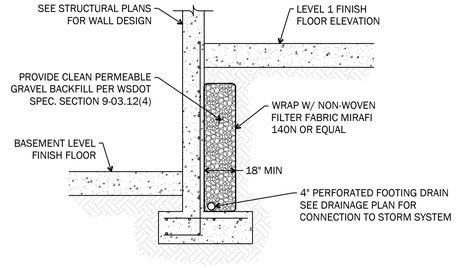

NTS
Internal Wall Foundation Drain 4

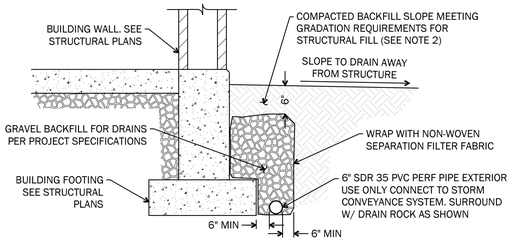

NOTES:

1. PIPE SHALL BE PLACED NO LOWER THAN 3" BELOW BOTTOM OF FOOTING
2. STRUCTURAL FILL SHALL MEET THE REQUIREMENTS OF SECTION 02200 OF THE PROJECT SPECIFICATIONS

NTS
Footing Drain with Filter Fabric 5

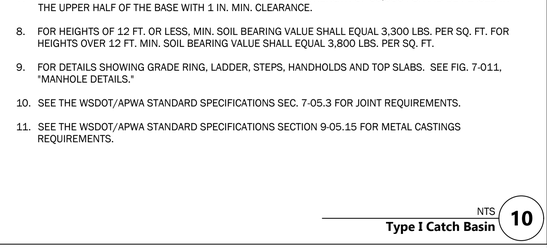

NOTES:

1. MANHOLES SHALL BE CONSTRUCTED IN ACCORDANCE WITH AASHTO M 199 UNLESS OTHERWISE SHOWN ON PLANS OR NOTED IN THE WSDOT/APWA STANDARD SPECIFICATIONS.
2. (2) HANDHOLDS IN ADJUSTMENT SECTION SHALL HAVE 3" MIN. CLEARANCE. STEPS IN MANHOLE SHALL HAVE 6" MIN. CLEARANCE. SEE FIG. 7-011,"MANHOLE DETAILS." HANDHOLDS SHALL BE PLACED IN ALTERNATING GRADE RINGS OR LEVELING BRICK COURSE WITH A MIN. OF ONE HAND HOLD BETWEEN THE LAST STEP AND TOP OF THE MANHOLE.
3. ALL REINFORCED CAST-IN-PLACE CONCRETE SHALL BE CLASS 4000. ALL PRECAST CONCRETE SHALL BE CLASS 4000. NON-REINFORCED CONCRETE IN CHANNEL AND SHELF SHALL BE CLASS 3000.
4. PRECAST BASES SHALL BE FURNISHED WITH CUTOUTS OR KNOCKOUTS. KNOCKOUTS SHALL HAVE WALL THICKNESS OF 2 IN. MIN. UNUSED KNOCKOUTS NEED NOT BE GROUTED IF WALL IS LEFT INTACT. PIPES SHALL BE INSTALLED ONLY IN FACTORY KNOCKOUTS UNLESS OTHERWISE APPROVED BY THE ENGINEER.
5. KNOCKOUT OR CUTOUT HOLE SIZE SHALL EQUAL PIPE OUTER DIAM. PLUS MANHOLE WALL THICKNESS. MAX. HOLE SIZE SHALL BE 36 IN. FOR 48 IN. MANHOLE, 42 IN. FOR 54 IN. MANHOLE, 48 IN. FOR 60 IN. M.H., 60 IN. FOR 72 IN. M.H. MIN. DISTANCE BETWEEN HOLES SHALL BE 8 IN.
6. MANHOLE RINGS AND COVERS SHALL BE IN ACCORDANCE WITH SEC. 7.05 AND MEET THE STRENGTH REQUIREMENTS OF FEDERAL SPECIFICATION RR-F-621D. MATING SURFACES SHALL BE FINISHED TO ASSURE NON-ROCKING FIT WITH ANY COVER POSITION.
7. ALL BASE REINFORCING STEEL SHALL HAVE A MIN. YIELD STRENGTH OF 60,000 PSI AND BE PLACED IN THE UPPER HALF OF THE BASE WITH 1 IN. MIN. CLEARANCE.
8. FOR HEIGHTS OF 12 FT. OR LESS, MIN. SOIL BEARING VALUE SHALL EQUAL 3,300 LBS. PER SQ. FT. FOR HEIGHTS OVER 12 FT. MIN. SOIL BEARING VALUE SHALL EQUAL 3,800 LBS. PER SQ. FT.
9. FOR DETAILS SHOWING GRADE RING, LADDER, STEPS, HANDHOLDS AND TOP SLABS. SEE FIG. 7-011, "MANHOLE DETAILS."
10. SEE THE WSDOT/APWA STANDARD SPECIFICATIONS SEC. 7-05.3 FOR JOINT REQUIREMENTS.
11. SEE THE WSDOT/APWA STANDARD SPECIFICATIONS SECTION 9-05.15 FOR METAL CASTINGS REQUIREMENTS.

NTS
Type I Catch Basin 10

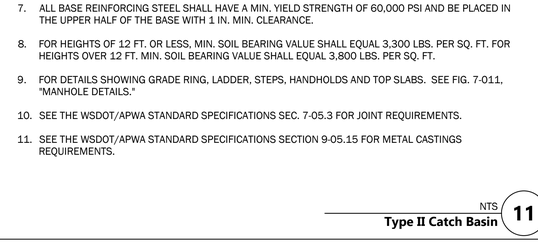

NOTES:

1. MANHOLES SHALL BE CONSTRUCTED IN ACCORDANCE WITH AASHTO M 199 UNLESS OTHERWISE SHOWN ON PLANS OR NOTED IN THE WSDOT/APWA STANDARD SPECIFICATIONS.
2. (2) HANDHOLDS IN ADJUSTMENT SECTION SHALL HAVE 3" MIN. CLEARANCE. STEPS IN MANHOLE SHALL HAVE 6" MIN. CLEARANCE. SEE FIG. 7-011,"MANHOLE DETAILS." HANDHOLDS SHALL BE PLACED IN ALTERNATING GRADE RINGS OR LEVELING BRICK COURSE WITH A MIN. OF ONE HAND HOLD BETWEEN THE LAST STEP AND TOP OF THE MANHOLE.
3. ALL REINFORCED CAST-IN-PLACE CONCRETE SHALL BE CLASS 4000. ALL PRECAST CONCRETE SHALL BE CLASS 4000. NON-REINFORCED CONCRETE IN CHANNEL AND SHELF SHALL BE CLASS 3000.
4. PRECAST BASES SHALL BE FURNISHED WITH CUTOUTS OR KNOCKOUTS. KNOCKOUTS SHALL HAVE WALL THICKNESS OF 2 IN. MIN. UNUSED KNOCKOUTS NEED NOT BE GROUTED IF WALL IS LEFT INTACT. PIPES SHALL BE INSTALLED ONLY IN FACTORY KNOCKOUTS UNLESS OTHERWISE APPROVED BY THE ENGINEER.
5. KNOCKOUT OR CUTOUT HOLE SIZE SHALL EQUAL PIPE OUTER DIAM. PLUS MANHOLE WALL THICKNESS. MAX. HOLE SIZE SHALL BE 60 IN. FOR 72 IN. MANHOLE, 84 IN. FOR 96 IN. MANHOLE. MIN. DISTANCE BETWEEN HOLES SHALL BE 12 IN.
6. MANHOLE RINGS AND COVERS SHALL BE IN ACCORDANCE WITH SEC. 7.05 AND MEET THE STRENGTH REQUIREMENTS OF FEDERAL SPECIFICATION RR-F-621D. MATING SURFACES SHALL BE FINISHED TO ASSURE NON-ROCKING FIT WITH ANY COVER POSITION.
7. ALL BASE REINFORCING STEEL SHALL HAVE A MIN. YIELD STRENGTH OF 60,000 PSI AND BE PLACED IN THE UPPER HALF OF THE BASE WITH 1 IN. MIN. CLEARANCE.
8. FOR HEIGHTS OF 12 FT. OR LESS, MIN. SOIL BEARING VALUE SHALL EQUAL 3,300 LBS. PER SQ. FT. FOR HEIGHTS OVER 12 FT. MIN. SOIL BEARING VALUE SHALL EQUAL 3,800 LBS. PER SQ. FT.
9. FOR DETAILS SHOWING GRADE RING, LADDER, STEPS, HANDHOLDS AND TOP SLABS. SEE FIG. 7-011, "MANHOLE DETAILS."
10. SEE THE WSDOT/APWA STANDARD SPECIFICATIONS SEC. 7-05.3 FOR JOINT REQUIREMENTS.
11. SEE THE WSDOT/APWA STANDARD SPECIFICATIONS SECTION 9-05.15 FOR METAL CASTINGS REQUIREMENTS.

NTS
Type II Catch Basin 11

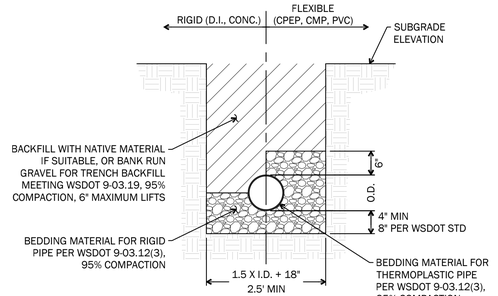

NOTE:

BACKFILL MATERIAL SHALL NOT HAVE PARTICLE SIZE GREATER THAN 1" WITHIN 6" OF THE PIPE OR THE CONTRACTOR HAS THE OPTION TO USE GRAVEL BACKFILL PIPE ZONE BEDDING CONFORMING TO WSDOT 9-03.12(3)

NTS
Pipe Bedding and Backfill 8

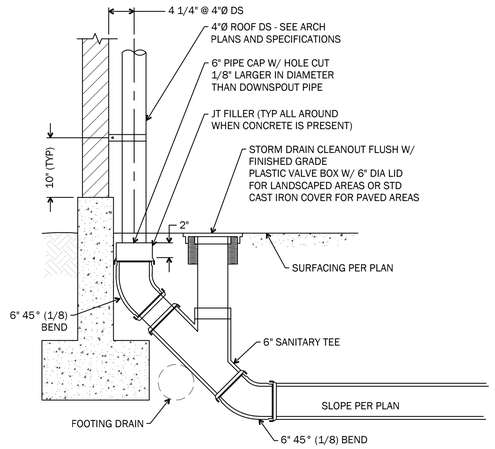

NTS
Downspout Connection with Exterior Cleanout 9

3427 BEACON AVE S
SEATTLE 98144
ANJALI@AGRANTDESIGN.COM
206-512-4209

anjali grant design LLC

JEFFREY D. A. JACOBSON
STATE OF WASHINGTON
43667
REGISTERED PROFESSIONAL ENGINEER
01/06/2026

3700 EAST MERCER WAY
BARNABIE POINT PROJECT

NO.	DATE	DESCRIPTION
2	01/06/2026	BLDG PERMIT CORRECTIONS
1	10/22/2025	BLDG PERMIT CORRECTIONS

06 JUNE 2025
BUILDING PERMIT

PROJECT:
STORM DRAINAGE DETAILS

C4.10

JACOBSON CONSULTING ENGINEERS

11/2/2023 4:17:30 PM C:\Users\Eash.Ya\Box\Documents\RKT_Central\R24_eashaT60SR.rvt
© ANJALI GRANT DESIGN LLC ORIGINAL SHEET SIZE: 22" X 34"

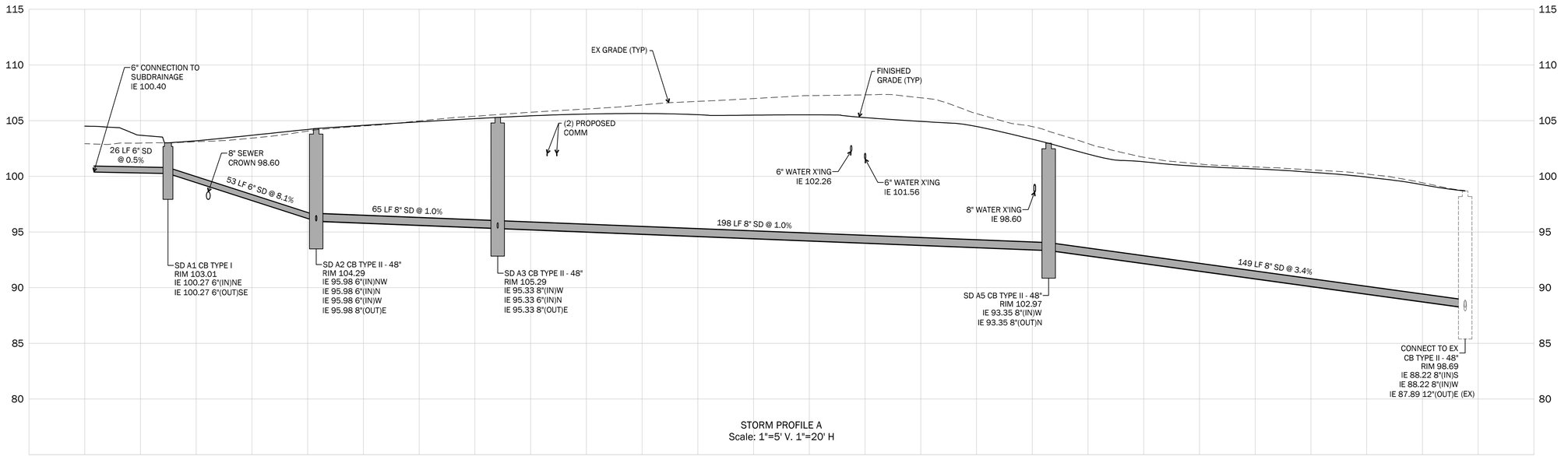

STORM PROFILE A
Scale: 1"=5' V. 1"=20' H

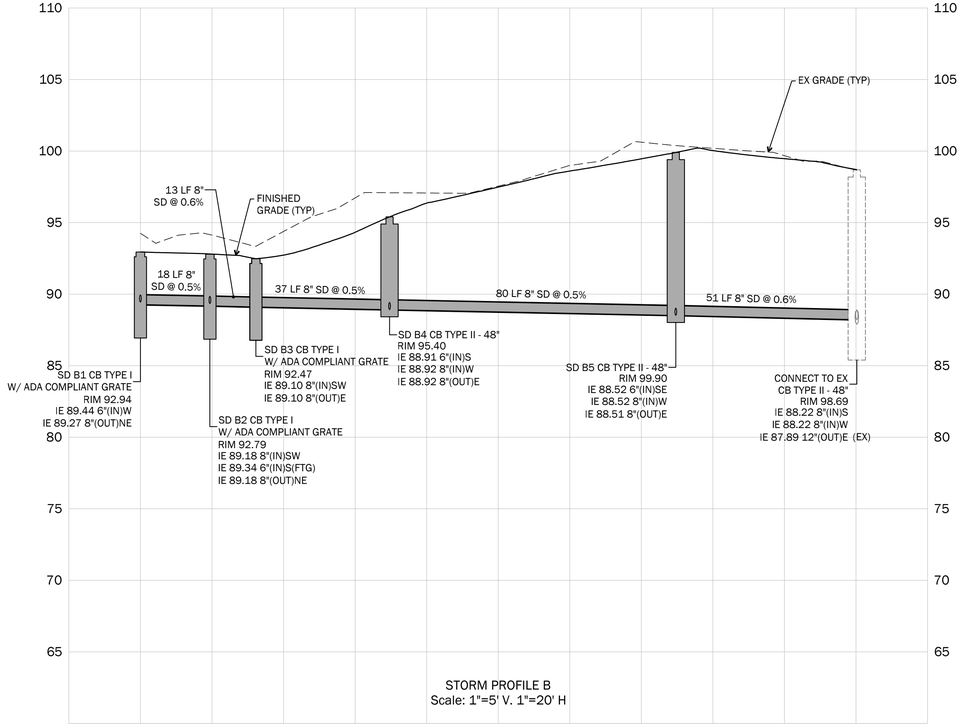

STORM PROFILE B
Scale: 1"=5' V. 1"=20' H

3427 BEACON AVE S
SEATTLE 98144
ANJALI@AGRANTDESIGN.COM
206-512-4209

anjali grant design LLC

JEFFREY D. A. JACOBSON
STATE OF WASHINGTON
43667
REGISTERED PROFESSIONAL ENGINEER
01/06/2026

3700 EAST MERCER WAY
BARNABIE POINT PROJECT

NO.	DATE	DESCRIPTION
2	01/06/2026	BLDG PERMIT CORRECTIONS
1	10/22/2025	BLDG PERMIT CORRECTIONS

06 JUNE 2025
BUILDING PERMIT

PROJECT:
STORM DRAINAGE PROFILES

C4.20

JACOBSON
CONSULTING ENGINEERS

11/2/2023 4:17:30 PM C:\Users\EdaharVader\Documents\RIT_cloud\RIT_Central R24_eadaharTB50R.rvt
© ANJALI GRANT DESIGN LLC ORIGINAL SHEET SIZE: 22" X 34"

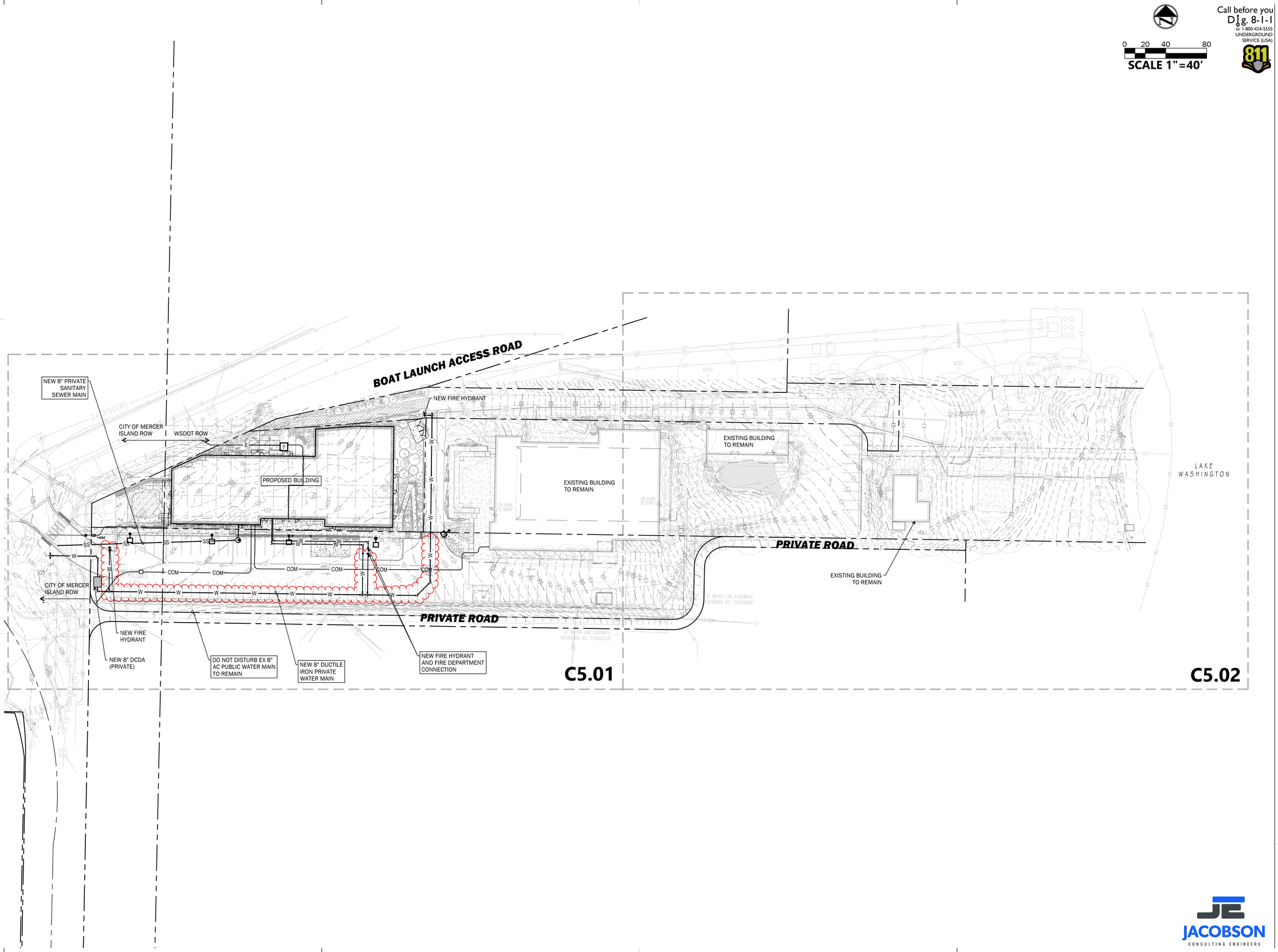

3427 BEACON AVE S
SEATTLE 98144
ANJALI@AGRANTDESIGN.COM
206-512-4209

anjali grant design LLC

JERALD A. JACOBSON
STATE OF WASHINGTON
43667
REGISTERED PROFESSIONAL ENGINEER
01/06/2026

3700 EAST MERCER WAY
BARNABIE POINT PROJECT

NO.	DATE	DESCRIPTION
2	01/06/2026	BLDG PERMIT CORRECTIONS
1	10/22/2025	BLDG PERMIT CORRECTIONS

06 JUNE 2025
BUILDING PERMIT

PROJECT:
OVERALL UTILITY PLAN

C5.00

JACOBSON
CONSULTING ENGINEERS

11/2/2023 4:17:30 PM C:\Users\Elisha\Yadav\Documents\INT_INT_Central R24_elisha1855R.rvt
© ANJALI GRANT DESIGN LLC ORIGINAL SHEET SIZE: 22" X 34"

Call before you Dig. 8-1-1 or 1-800-424-5555 UNDERGROUND SERVICE (USA)

0 10 20 40

SCALE 1"=20'

LEGEND

PROPERTY LINE — N 79°33'06" E – 46.81'

STORM DRAINAGE PIPE — SD

YD/CO/CB 2/MH

SANITARY SEWER — SS

SANITARY MH/CO

WATER MAIN — W

FH/FDC/PIV/VALVE FH FDC PIV WV

WATER VAULT/METER

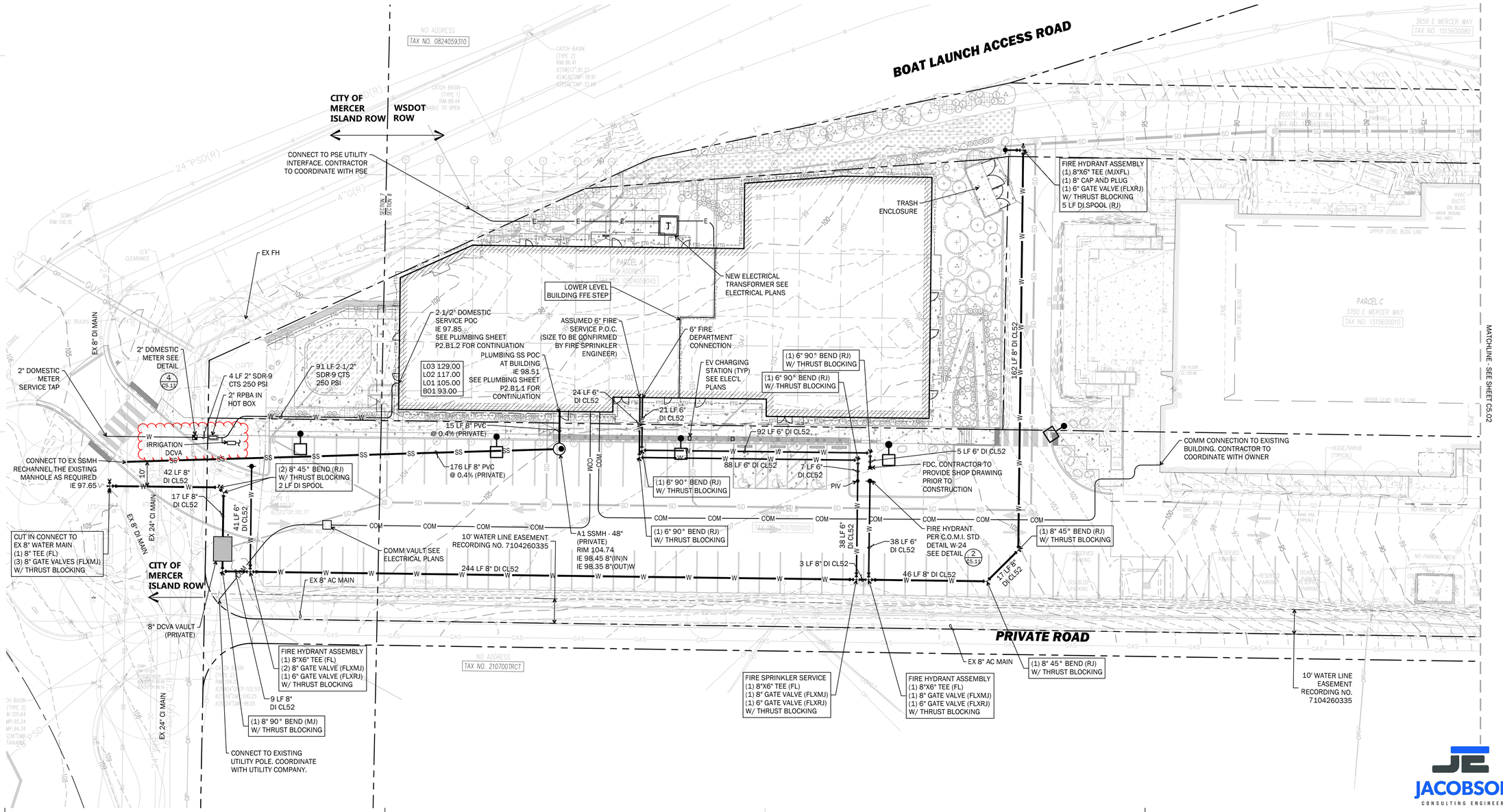

3427 BEACON AVE S
SEATTLE 98144
ANJALI@AGRANTDESIGN.COM
206-512-4209

anjali grant design LLC

JEFFREY D. JACOBSON STATE OF WASHINGTON 43667 REGISTERED PROFESSIONAL ENGINEER

01/06/2026

3700 EAST MERCER WAY BARNABIE POINT PROJECT

NO.	DATE	DESCRIPTION
2	01/06/2026	BLDG PERMIT CORRECTIONS
1	10/22/2025	BLDG PERMIT CORRECTIONS

06 JUNE 2025

BUILDING PERMIT

PROJECT:

UTILITY PLAN

C5.01

JACOBSON CONSULTING ENGINEERS

11/2/2023 4:17:30 PM C:\Users\Eaisha\Vedav\Documents\HNT_HNT_Central R24_eaisha.rtl8598.rvt
© ANJALI GRANT DESIGN LLC ORIGINAL SHEET SIZE: 22" X 34"

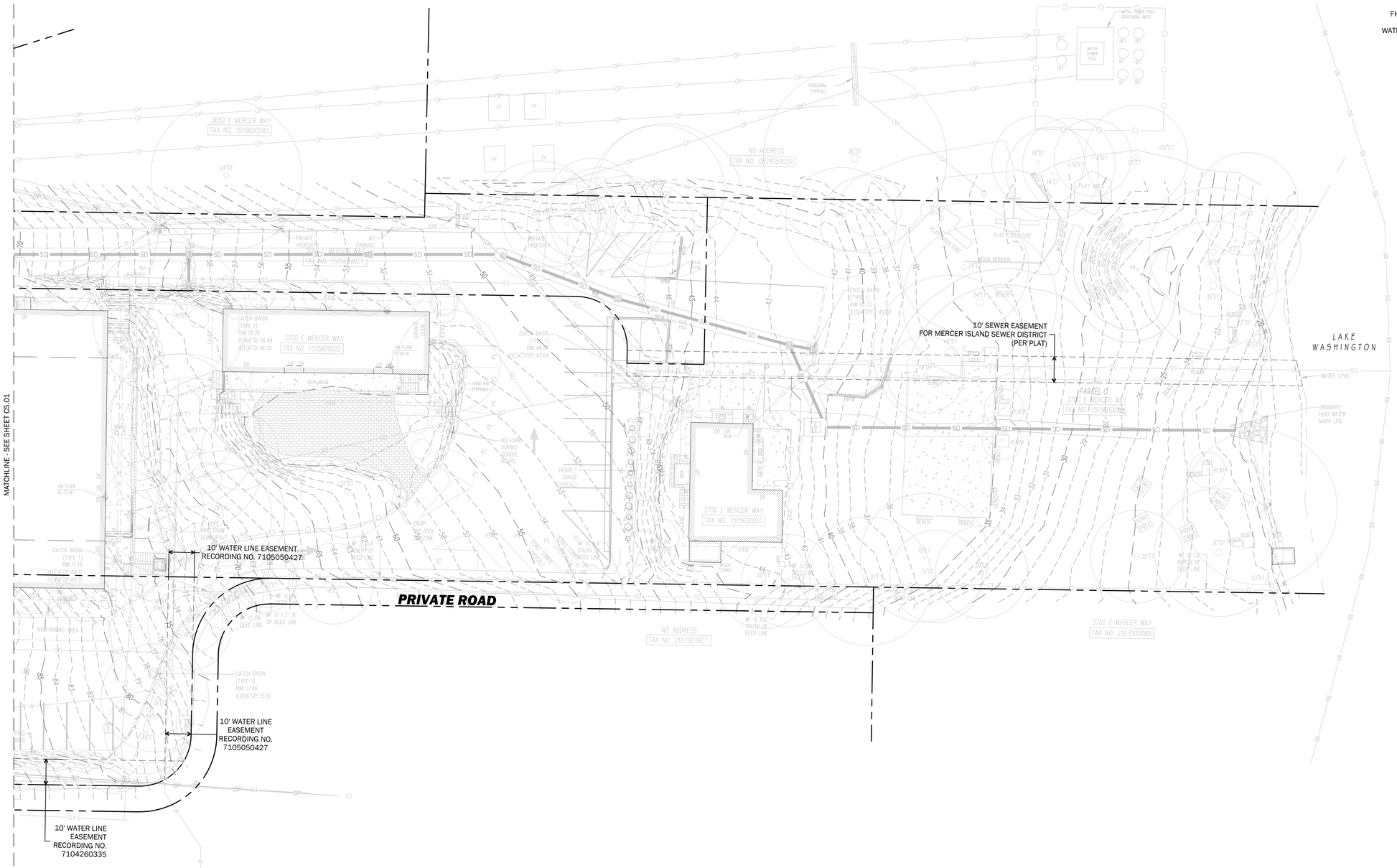

Call before you
Dig. 8-1-1
or 1-800-424-5555
UNDERGROUND
SERVICE (USA)

0 10 20 40
SCALE 1"=20'

LEGEND

- PROPERTY LINE — N 79°33'06" E – 46.81'
- STORM DRAINAGE PIPE — SD
- YD/CO/CB 2/MH
- SANITARY SEWER — SS
- SANITARY MH/CO
- WATER MAIN — W
- FH/FDC/PIV/VALVE — FH FDC PIV WV
- WATER VAULT/METER

3427 BEACON AVE S
SEATTLE 98144
ANJALI@AGRANTDESIGN.COM
206-512-4209

anjali grant design LLC

JEFFREY D. A. JACOBSON
STATE OF WASHINGTON
43667
REGISTERED
PROFESSIONAL ENGINEER
01/06/2026

3700 EAST MERCER WAY
BARNABIE POINT PROJECT

NO.	DATE	DESCRIPTION
2	01/06/2026	BLDG PERMIT CORRECTIONS
1	10/22/2025	BLDG PERMIT CORRECTIONS

06 JUNE 2025
BUILDING PERMIT

PROJECT:
UTILITY PLAN

C5.02

JACOBSON
CONSULTING ENGINEERS

11/2/2023 4:17:30 PM C:\Users\Eamon\Desktop\Documents\WIT_UNIT_Central R24_eastsTREGR.rvt
© ANJALI GRANT DESIGN LLC ORIGINAL SHEET SIZE: 22" X 34"

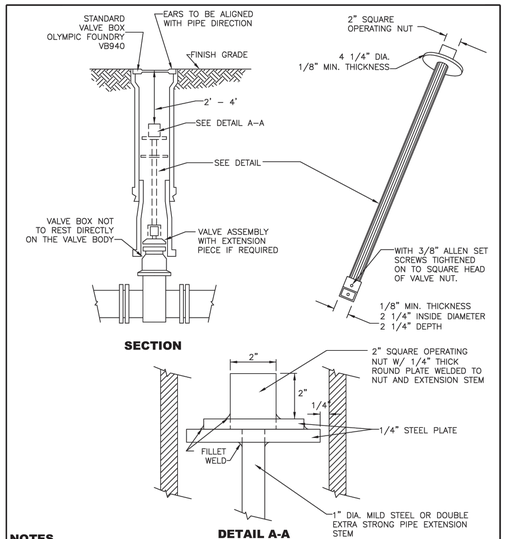

NOTES

1. EXTENSIONS ARE REQUIRED WHEN THE VALVE NUT IS MORE THAN FOUR (4) FEET BELOW FINISHED GRADE.
2. EXTENSIONS ARE TO BE A MINIMUM OF ONE (1) FOOT LONG. ONLY ONE EXTENSION PER VALVE WILL BE ALLOWED.
3. ALL EXTENSIONS ARE TO BE MADE OF CAST OR DUCTILE IRON, SIZED AS NOTED AND PAINTED WITH TWO COATS ASPHALTIC VARNISH.

CITY OF MERCER ISLAND
STANDARD DETAILS
WATER
WATER VALVE EXTENSION

REV	DATE							APPROVED
						12-23-2013	NO SCALE	**W-9**

NTS **Water Valve Extension** 1

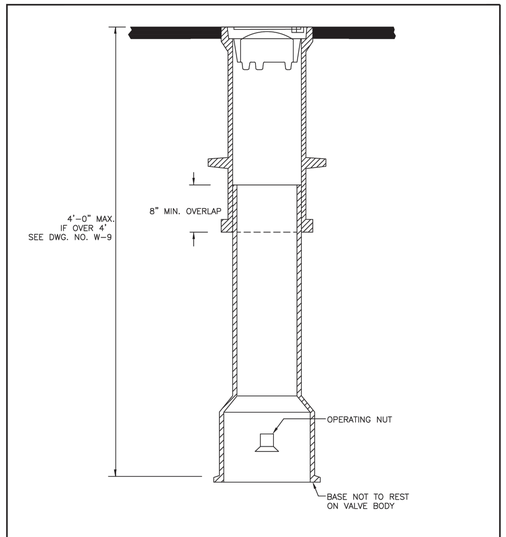

NOTES

1. VALVE BOX RISER WITH PAVING LUGS SHALL BE OLYMPIC NO. VB2 OR EQUAL.
2. MINIMUM VALVE BOX BOTTOM LENGTH OVERALL = 21 1/16". SHORT RISERS ARE NOT PERMITTED.
3. SEE DWG. NO. W-7 FOR DETAILS.

CITY OF MERCER ISLAND
STANDARD DETAILS
WATER
WATER VALVE BOX

REV	DATE							APPROVED
						12-23-2013	NO SCALE	**W-8**

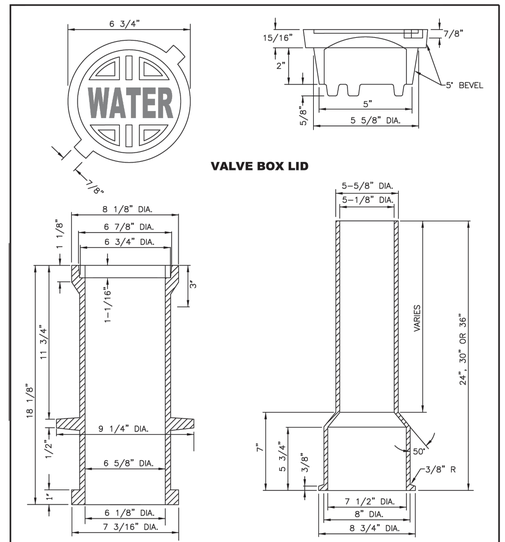

NOTES

1. VALVE BOX SHALL BE OLYMPIC FOUNDRY PART NO. VB940 OR EQUAL.
2. THE TOP AND LID SHALL HAVE A MACHINED FIT.
3. LOCKING LID, WHEN REQUIRED, SHALL BE OLYMPIC FOUNDRY PART NO. 13-5200 OR EQUAL.

CITY OF MERCER ISLAND
STANDARD DETAILS
WATER
WATER VALVE BOX

REV	DATE							APPROVED
						3-20-2006	NO SCALE	**W-7**

NTS **Water Valve Box** 3

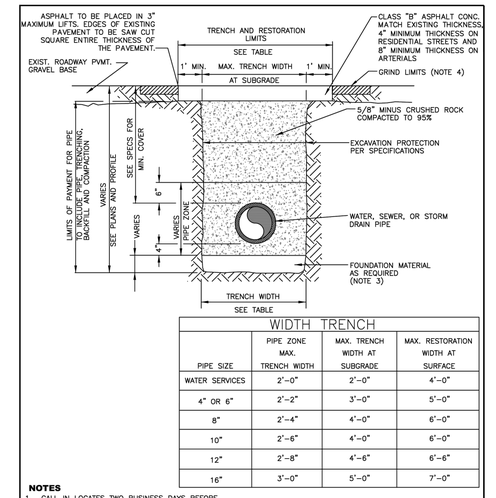

WIDTH TRENCH

PIPE SIZE	PIPE ZONE MAX. TRENCH WIDTH	MAX. TRENCH WIDTH AT SUBGRADE	MAX. RESTORATION WIDTH AT SURFACE
WATER SERVICES	2'-0"	2'-0"	4'-0"
4" OR 6"	2'-2"	3'-0"	5'-0"
8"	2'-4"	4'-0"	6'-0"
10"	2'-6"	4'-0"	6'-0"
12"	2'-8"	4'-6"	6'-6"
16"	3'-0"	5'-0"	7'-0"

NOTES

1. CALL IN LOCATES TWO BUSINESS DAYS BEFORE YOU DIG. (1-800-424-5555)
2. IN RIGHT-OF-WAY USE 100% 5/8 MINUS CRUSHED ROCK FOR BEDDING, PIPE ZONE AND BACKFILL
3. FOUNDATION MATERIAL SHALL BE 1 ¼" MINUS CRUSHED ROCK OR OTHER AGGREGATE AS APPROVED BY CITY ENGINEER.
4. GRIND AND OVERLAY LIMITS SHALL EXTEND A MINIMUM OF 10' PAST THE END OF TRENCH AREAS.
5. SEAL ALL FINAL PATCHING AND PAVING SEAMS WITH LIQUID ASPHALT. SQUEEGEE OR MOP THE SEALER. COVER WITH DRY SAND.

CITY OF MERCER ISLAND
STANDARD DETAILS
WATER
TRENCH SECTION

REV	DATE							APPROVED
						3-29-2021	NO SCALE	**W-3**

NTS **Trench Section** 4

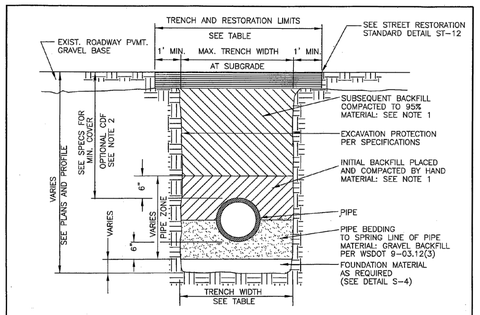

TRENCH WIDTH

PIPE SIZE	PIPE ZONE MAX. TRENCH WIDTH	MAX. TRENCH WIDTH AT SUBGRADE	MAX. RESTORATION WIDTH AT SURFACE
SIDE SEWER	2'-0"	2'-0"	6'-0"
4" OR 6"	2'-2"	3'-0"	8'-0"
8"	2'-4"	4'-0"	8'-0"
10"	2'-6"	4'-0"	8'-0"
12"	2'-8"	4'-6"	8'-6"

NOTES

1. ALL TRENCH BACKFILL IN PUBLIC RIGHT-OF-WAY OR ROADWAY AREAS SHALL BE CRUSHED SURFACING PER WSDOT 9-09.9(3) OR BANK RUN GRAVEL PER WSDOT 9-03.19, COMPACTED IN 6" LIFTS.
2. CDF FOR BACKFILL MAY BE REQUIRED BY CITY ENGINEER WHEN PROPER COMPACTION AROUND EXISTING UTILITIES MAY NOT BE POSSIBLE. CDF SHALL BE PER WSDOT 2-09.3(1)E.
3. SEE S-4 FOR PIPE BEDDING DETAILS.

CITY OF MERCER ISLAND
STANDARD DETAILS
SEWER
SEWER TRENCH DETAIL

REV	DATE							APPROVED
						6-5-2009	NO SCALE	**S-3**

NTS **Sewer Trench** 5

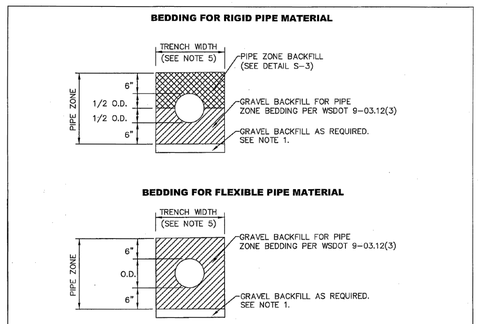

NOTES

1. EXCAVATE UNSTABLE MATERIAL DOWN TO FIRM SOIL. REPLACE WITH GRAVEL BACKFILL PER WSDOT 9-03.12(3) AS DIRECTED BY THE CITY ENGINEER.
2. PROVIDE UNIFORM SUPPORT UNDER BARREL.
3. HAND TAMP UNDER HAUNCHES.
4. COMPACT BEDDING AND BACKFILL MATERIAL TO 95% MAX. DENSITY EXCEPT DIRECTLY OVER PIPE. HAND TAMP ONLY UNTIL MINIMUM 6" ABOVE TOP OF PIPE.
5. 30" MAXIMUM TRENCH WIDTH FOR PIPE UP TO AND INCLUDING 12", FOR PIPE LARGER THAN 12", USE O.D. PLUS 16".

CITY OF MERCER ISLAND
STANDARD DETAILS
SEWER
PIPE BEDDING

REV	DATE							APPROVED
						6-5-2009	NO SCALE	**S-4**

NTS **Pipe Bedding** 6

THRUST BLOCKING TABLE

PIPE SIZE	MINIMUM BEARING AREA AGAINST UNDISTURBED SOIL IN SQUARE FEET				
	A	B	C	D	E
4	2	2	2	2	2
6	4	3	2	2	2
8	7	5	4	2	2
10	11	8	6	3	2
12	16	12	9	5	3
14	22	16	12	6	3
16	29	20	16	8	4

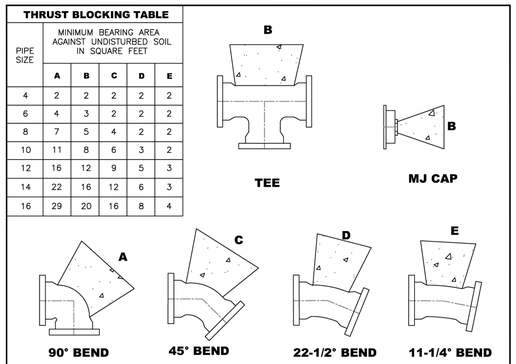

NOTES

1. ROMAC MJ WEDGE ACTION RETAINER MAY BE SUBSTITUTED FOR VERTICAL BLOCKING UPON PRIOR APPROVAL OF THE CITY ENGINEER.
2. CONCRETE THRUST BLOCKING SHALL BE POURED AGAINST UNDISTURBED EARTH.
3. THRUST BLOCKS SHALL BE CAST-IN-PLACE AND BE CONSTRUCTED WITH CLASS 3000 OR COMMERCIAL CONCRETE.
4. BLOCK SHALL BEAR AGAINST FITTINGS ONLY AND SHALL BE CLEAR OF BOLTS AND JOINTS TO PERMIT TAKING UP OR DISMANTLING JOINT. WRAP FITTINGS WITH 8 MIL THICK POLYETHYLENE SHEETING PRIOR TO POURING CONCRETE.
5. BEARING AREA MUST BE ADJUSTED FOR HIGHER INTERNAL PRESSURES AND LOWER SOIL BEARING VALUES.
6. THE CONTRACTOR SHALL INSTALL BLOCK WHICH IS ADEQUATE TO WITHSTAND FULL TEST PRESSURE AS WELL AS TO CONTINUOUSLY STAND OPERATING PRESSURE UNDER ALL CONDITIONS OF SERVICE.

CITY OF MERCER ISLAND
STANDARD DETAILS
WATER
HORIZONTAL CONCRETE BLOCKING

REV	DATE							APPROVED
						3-30-2021	NO SCALE	**W-5A**

VERTICAL THRUST BLOCKING FOR 11 1/4° – 22 1/2° – 45°

PIPE SIZE NOM. DIAMETER – INCHES	TEST PRESSURE P.S.I.	VB VERTICAL BEND DEGREES	VB AMOUNT CONCERT BLOCKING – CU. FT.	S LENGTH OF SIDE FEET	d SHACKLE ROD DIA. – INCHES	L DEPTH OF ROD IN CONCRETE INCHES	NUMBER OF TIE RODS SETS (2 EMBEDDED RODS PER SET)
3"	250	11-1/4	3.4	1.5	5/8"	12"	2
		22-1/2	5.4	1.75	5/8"	12"	2
		45	11.4	2.25	5/8"	12"	2
4"	250	11-1/4	5.4	1.75	5/8"	12"	2
		22-1/2	11.4	2.75	5/8"	12"	2
		45	20.8	2.75	5/8"	12"	2
6"	250	11-1/4	11.4	2.25	5/8"	12"	2
		22-1/2	27.0	3.0	5/8"	12"	2
		45	42.9	3.5	5/8"	12"	2
8"	250	11-1/4	20.8	2.75	5/8"	12"	2
		22-1/2	42.9	3.5	5/8"	12"	2
		45	76.8	4.25	5/8"	12"	2
10"	250	11-1/4	34.3	3.25	5/8"	12"	2
		22-1/2	64.0	4.0	5/8"	12"	2
		45	125	5.0	5/8"	12"	2
12	250	11-1/4	42.9	3.5	5/8"	12"	2
		22-1/2	91.1	4.5	5/8"	12"	2
		45	166	5.5	5/8"	12"	4
14"	250	11-1/4	52.7	3.75	3/4"	12"	2
		22-1/2	107	4.75	3/4"	24"	2
		45	190	5.75	3/4"	24"	4
16"	250	11-1/4	64.0	4.0	3/4"	24"	2
		22-1/2	125	5.0	3/4"	24"	4
		45	216	6.0	3/4"	24"	4
18"	250	11-1/4	64.0	4.0	3/4"	24"	2
		22-1/2	145	5.25	3/4"	24"	4
		45	244	6.25	3/4"	24"	4

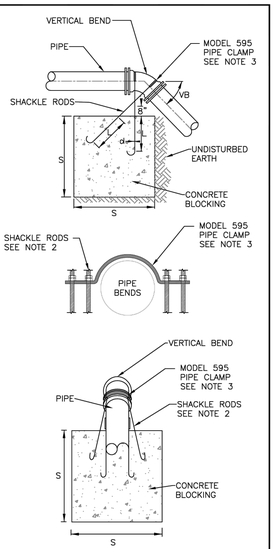

BLOCKING FOR VERTICAL BENDS

NOTES

1. CONCRETE SHALL BE 3000 PSI CONCRETE
2. SHACKLE RODS/ALL THREAD SHALL BE ZINC PLATED. REFER TO CHART FOR SIZE AND NUMBER OF SHACKLE RODS. REFER TO PIPE CLAMP FOR INSTALLATION OF SHACKLE ROD. AFTER CONCRETE IS PLACED, 24 HOURS LATER INSTALL NUT AND WASHER AND TIGHTEN SHACKLE RODS NUTS ON PIPE CLAMP.
3. ANVIL PIPE CLAMP 595 FITS 4"–24" DIA.

CITY OF MERCER ISLAND
STANDARD DETAILS
WATER
VERTICAL CONCRETE BLOCKING

REV	DATE							APPROVED
						3-30-2021	NO SCALE	**W-5B**

NTS **Concrete Blocking** 7

JACOBSON CONSULTING ENGINEERS

3427 BEACON AVE S
SEATTLE 98144
ANJALI@AGRANTDESIGN.COM
206-512-4209

anjali grant design LLC

REGISTERED PROFESSIONAL ENGINEER
JEFFREY A. JACOBSON
STATE OF WASHINGTON
43667
01/06/2026

3700 EAST MERCER WAY
BARNABIE POINT PROJECT

NO.	DATE	DESCRIPTION
2	01/06/2026	BLDG PERMIT CORRECTIONS
1	10/22/2025	BLDG PERMIT CORRECTIONS

06 JUNE 2025
BUILDING PERMIT

PROJECT:
UTILITY DETAILS

C5.10

11/2/2023 4:17:30 PM C:\Users\Zaiha\Arabic\Documents\ANT_Central R24_zaiha1856R.rvt
© ANJALI GRANT DESIGN LLC ORIGINAL SHEET SIZE: 22" X 34"

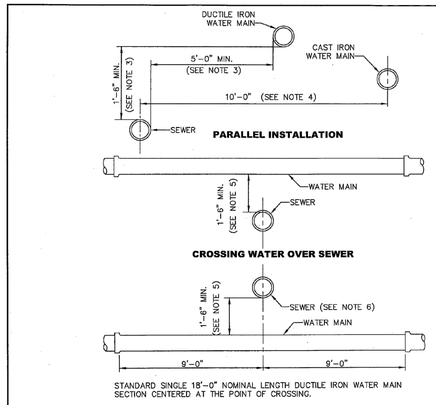

STANDARD SINGLE 18'-0" NOMINAL LENGTH DUCTILE IRON WATER MAIN SECTION CENTERED AT THE POINT OF CROSSING.

NOTES

1. ANY EXCEPTIONS TO THE STANDARD PLAN MAY BE APPROVED BY THE CITY ENGINEER.
2. "SEWER" INCLUDES SANITARY SEWER, COMBINED SEWER AND SIDE SEWER.
3. WHERE MINIMUM CLEARANCES CANNOT BE MET, SEWER SHALL BE CONSTRUCTED OF MATERIALS AND WITH JOINTS THAT ARE EQUIVALENT TO WATER MAIN STANDARDS INCLUDING WATER MAIN PRESSURE TESTING REQUIREMENTS.
4. NO VERTICAL CLEARANCE REQUIRED.
5. IF VERTICAL SEPARATION CANNOT BE MET, WATER MAIN SHALL BE A STANDARD SINGLE 18'-0" NOMINAL LENGTH DUCTILE IRON WATER MAIN SECTION CENTERED AT THE POINT OF CROSSING.
6. SEWER SHALL HAVE ADEQUATE FOUNDATION SUPPORT TO PREVENT SETTLEMENT ON THE WATER MAIN AN TO PREVENT DEFLECTION OF WATER MAIN JOINTS.
7. CROSSINGS AT AN ANGLE BETWEEN 90° AND 45° MAY OCCUR BETWEEN 9'-0" AND 6'-0" OF WATER MAIN JOINT FOR CROSSINGS LESS THAN 45° , SEE NOTE 1.

CITY OF MERCER ISLAND
STANDARD DETAILS
SEWER
WATER & SEWER CLEARANCES AND MATERIAL REQUIREMENTS

6-5-2009	NO SCALE	S-2

REV DATE | APPROVED

NTS **1** Utility Clearances and Requirements

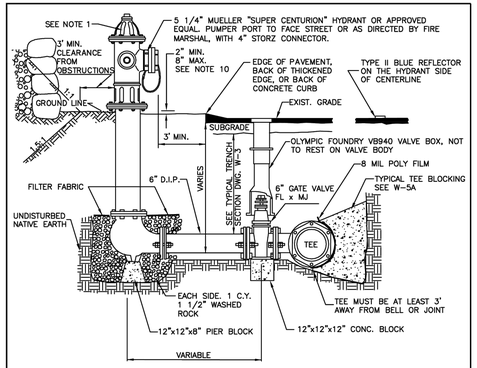

NOTE:

1. 1-5 1/4" M.V.O. HYDRANT WITH 2-2 1/2" N.T.S. M.J. INLET WITH LUGS, BRASS-TO-BRASS SUB-SEAT AND 1-4 1/2" PUMPER, SEATTLE STANDARD PIPE THREAD WITH 4" STORZ CONNECTOR HARRINGTON MODEL NO. HPHA40-40-004/CAP, SIZE 4.875-INCH BY 6-INCH.
2. NO DOMESTIC CONNECTIONS CAN BE MADE TO THE FIRE HYDRANT RUNS.
3. ANY FIRE HYDRANT RUN OVER 18 FEET IN LENGTH OF PIPE SHALL HAVE RESTRAINED JOINT GASKETS.
4. USE ROMA GRIP, OR APPROVED EQUAL, PIPE RESTRAINERS AT VALVE AND HYDRANT BASE.
5. HYDRANT SHALL BE PAINTED WITH 2 COATS OF FARWEST #250 HIGH GLOSS WHITE PAINT, OR APPROVED EQUAL, APPLIED WITH A PAINT BRUSH. DO NOT APPLY PAINT TO STORZ FITTING, BRASS PORT THREADS, OR BELOW SAFETY FLANGE.
6. BOLLARDS MAY BE USED TO PROTECT THE HYDRANT WHEN NO CURBS ARE PRESENT OR IN EXPOSED AREAS OF PARKING LOTS.
7. STRAIGHT PIPE TO HYDRANTS FROM MAIN, NO BENDS.
8. REMOVE CHAINS FROM HYDRANT CAPS.
9. VALVE AND HYDRANT MUST BE PLUMB.
10. THIS DISTANCE IS MEASURED FROM BOTTOM OF SAFETY FLANGE TO LEVEL OF FINISH GRADE BELOW HYDRANT.

CITY OF MERCER ISLAND
STANDARD DETAILS
WATER
FIRE HYDRANT CONNECTION

02-23-2021	NO SCALE	W-24

REV DATE | APPROVED

NTS **2** Fire Hydrant Connection

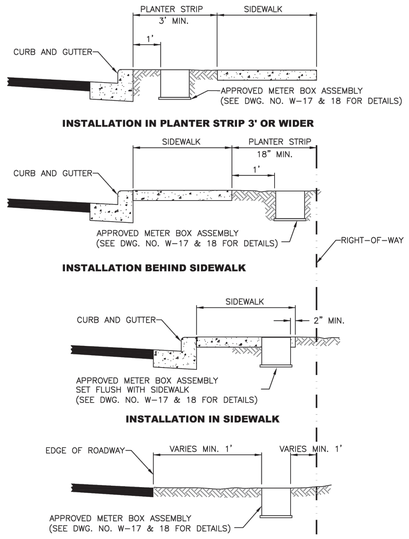

CITY OF MERCER ISLAND
STANDARD DETAILS
WATER
WATER METER PLACEMENT

3-20-2006	NO SCALE	W-16

REV DATE | APPROVED

NTS **3** Water Meter Placement

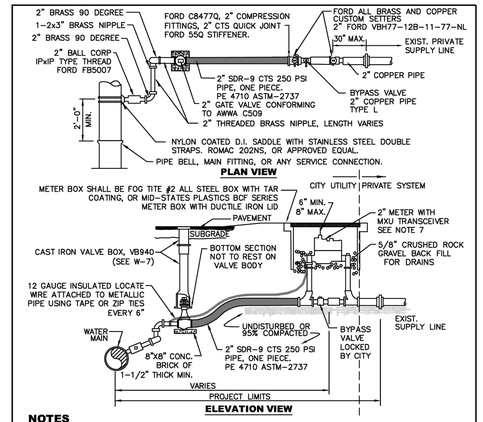

NOTES

1. WATER SERVICES SHALL COMPLY WITH THE REDUCTION OF LEAD IN DRINKING WATER ACT DATED 01/04/2014.
2. MINIMUM DISTANCE BETWEEN CORP STOPS SHALL BE 18" MINIMUM DISTANCE BETWEEN TAPS, BETWEEN CORP STOP AND PIPE ENDS SHALL BE 24", ALL HORIZONALLY STAGGERED.
3. PLASTIC METER BOXES SHALL NOT BE INSTALLED WITHIN ROADWAY, SIDEWALK, OR DRIVEWAYS.
4. UPON CITY ENGINEER'S APPROVAL, METER BOXES ARE ALLOWED TO BE INSTALLED IN PORTLAND CEMENT CONCRETE PAVEMENT OR SIDEWALK.
5. WHEN CONNECTING TO EXISTING PRIVATE SUPPLY LINE CONTAINING FERROUS METAL, PROVIDE INSULATING COUPLING (DB SERIES WITH C21 SERIES ADAPTERS) AND PROVIDE REDUCER AS NECESSARY TO MATCH EXISTING PRIVATE SUPPLY LINE DIAMETER.
6. SERVICE LINE SHALL BE PERPENDICULAR TO THE WATER MAIN AND STRAIGHT TO WATER METER, UNLESS OTHERWISE APPROVED BY CITY ENGINEER. PROVIDE WINDING SLACK IN THE SERVICE LINE BETWEEN THE MAIN AND WATER METER.
7. WATER METER SUPPLIED BY CITY.
8. ALL FITTINGS TO BE BRASS COMPRESSION TYPE, FORD QUICK JOINT OR EQUAL.
9. NO SERVICE CONNECTIONS BETWEEN BLOW-OFF AND END OF MAIN.

CITY OF MERCER ISLAND
STANDARD DETAILS
WATER
2" WATER METER INSTALLATION

02-05-2021	NO SCALE	W-14A

REV DATE | APPROVED

NTS **4** Domestic Meter Installation

3427 BEACON AVE S
SEATTLE 98144
ANJALI@AGRANTDESIGN.COM
206-512-4209

anjali grant design LLC



3700 EAST MERCER WAY
BARNABIE POINT PROJECT

NO.	DATE	DESCRIPTION
2	01/06/2026	BLDG PERMIT CORRECTIONS
1	10/22/2025	BLDG PERMIT CORRECTIONS

06 JUNE 2025
BUILDING PERMIT

PROJECT:
UTILITY DETAILS

C5.11

Oldcastle Precast

Delivering Reliability

4484-LA

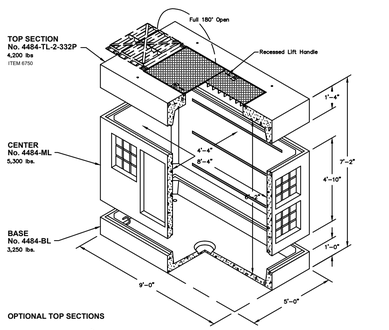

Non Skid Covers Available
FOR DETAILS, SEE REVERSE>>
Items Shown Are Subject To Change Without Notice
Issue Date: April 2016

27

© 1970–2016 Oldcastle Precast, Inc.

Mailing Address
PO Box 488
Auburn WA 98071
Phone: 800-426-1936
Fax: 253-735-2501
Email: opauburn@oldcastle.com

opauburn.com

Oldcastle Precast

Delivering Reliability

4484-LA

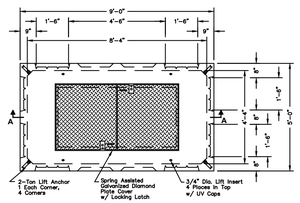

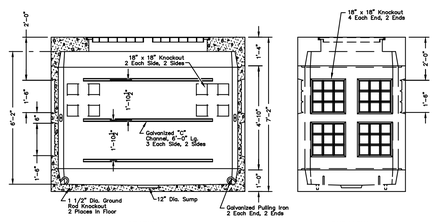

SCALE: 3/8"=1'-0"

27.1

© 1970–2016 Oldcastle Precast, Inc.

opauburn.com

NTS **6** Precast Vault

GENERAL NOTES

A. SEE W-19B FOR MATERIAL LIST.

B. VALVE ASSEMBLY TO BE CENTERED IN VAULT.

C. TEE AND GATE VALVE REQUIRED ON MAIN.

D. WHEN DOUBLE CHECK VALVE ASSEMBLY IS USED IN SAME LINE WITH DOMESTIC BUILDING METER, METERED DETECTOR BYPASS SHALL BE OMITTED.

E. ASSEMBLY TO BE MAINTAINED BY OWNER AND ANNUAL CERTIFICATION IS REQUIRED.

F. THE CITY OF MERCER ISLAND MUST TEST AND CERTIFY THE FIRE LINE BEFORE CONNECTION TO THE CITY SYSTEM IS ALLOWED.

G. FIRELINE SHALL NOT BE PUT INTO SERVICE UNTIL THE DOUBLE CHECK VALVE ASSEMBLY IS APPROVED BY THE CITY.

H. VAULT PENETRATIONS SHALL BE BE CORE DRILLED.

I. A THRUST RING OR APPROVED EQUAL SHALL BE INSTALLED ON INLET SIDE OF PIPE RESTRAINED JOINT.

J. MATERIALS FOR BY PASS SHALL BE ALL BRASS AND COPPER WITH SWIVEL COUPLINGS BETWEEN SHUT-OFF VALVES FOR REPLACEMENT.

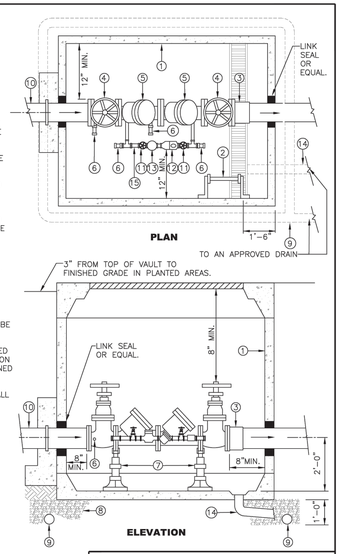

CITY OF MERCER ISLAND
STANDARD DETAILS
WATER
DOUBLE DETECTOR CHECK VALVE ASSEMBLY

7-01-2014	NO SCALE	W-19A

REV DATE | APPROVED

NOTE: SEE DETAIL 6 THIS SHEET FOR PROPOSED PRECAST CONCRETE VAULT

KEY NO.	QUANTITY 4"	QUANTITY 6" & 8"	MATERIAL
1	1	–	PRE CAST CONCRETE VAULT AS APPROVED BY THE CITY ENGINEER
1	–	1	PRE CAST CONCRETE VAULT AS APPROVED BY THE CITY ENGINEER
1	1	–	PRE CAST CONCRETE VAULT AS APPROVED BY THE CITY ENGINEER
1	–	1	PRE CAST CONCRETE VAULT AS APPROVED BY THE CITY ENGINEER
1	–	1	PRE CAST CONCRETE VAULT AS APPROVED BY THE CITY ENGINEER
1	1	1	LW PRODUCTS ALUMINUM, SINGLE DOOR, H-20 OR EQUAL.
2	1	1	FABRICATED BOLT-ON LADDER. USE THREE SETS OF MOUNTING BRACKETS ATTACHED TO VAULT WALL WITH 5/8" DIAMETER CORROSION RESISTANT ANCHOR BOLTS (HILTI KWIK BOLT, PHILIPS RED HEAD, OR APPROVED EQUAL). ALL STEEL FOR LADDER SHALL BE A-36, OSHA APPROVED HOT DIPPED GALVANIZED AFTER FABRICATION. SEE DRAWING NO. W-27C.
3	1	–	4" DIAMETER FLEXIBLE FLANGED COUPLING ADAPTER ROCKWELL TYPE 912
3	–	1	8" OR 6" DIAMETER FLEXIBLE FLANGED COUPLING ADAPTER ROCKWELL TYPE 912
4	1	–	4" O.S. & Y. GATE VALVE U.L. APPROVED
4	–	1	8" OR 6" O.S. & Y. GATE VALVE U.L. APPROVED
5	1	–	4" D.S.H.S. APPROVED DOUBLE CHECK VALVE ASSEMBLY, INCLUDING 2 O.S. & Y. GATE VALVES, TEST COCK, 3/4" DOUBLE CHECK VALVE, SINGLE OR MULTI JET METER (TO READ IN CUBIC FEET) AND 3/4" BRASS OR COPPER BYPASS WITH IN LINE VALVE.
5	–	1	8" OR 6" D.S.H.S. APPROVED DOUBLE CHECK VALVE ASSEMBLY, INCLUDING 2 O.S. & Y. GATE VALVES, TEST COCK, 3/4" DOUBLE CHECK VALVE, SINGLE OR MULTI JET METER (TO READ IN CUBIC FEET) AND 3/4" BRASS OR COPPER BYPASS WITH IN LINE VALVES.
6	1	1	3/4" DIAMETER TEST COCKS
7	2	2	ADJUSTABLE PIPE SADDLE SUPPORT (ITT GRINNELL FIG 264 OR APPROVED EQUAL). ATTACH TO VAULT FLOOR WITH FOUR 1/2" DIAMETER CORROSION RESISTANT ANCHOR BOLTS (HILT KIWI BOLT, PHILIPS RED HEAD OR APPROVED EQUAL). SEE DRAWING NO. W-27C.
8	–	–	PEA GRAVEL BACKFILL FOR PIPE BEDDING UNDER PRECAST CONCRETE UTILITY VAULT.
9	–	–	4" DIAMETER UNDERDRAIN, CONNECT TO DRAINAGE SYSTEM, SCHEDULE 200 PERFORATED PVC WITH GALVANIZED SCREEN EACH END.
10	–	–	4" DIAMETER CL. 52 DUCTILE IRON PIPE
10	–	–	6" OR 8" DIAMETER CL. 52 DUCTILE IRON PIPE
11	1	1	3/4" GATE VALVE U.L. LISTED
12	1	1	5/8" x 3/4" ACCULINK MULTINET MASTER METER WITH SENSUS COMPATABLE MXU READ IN CU. FT. MULTI-JET
13	1	1	3/4" DOUBLE CHECK VALVE
14	1	1	SOLID PVC PIPE SUMP DRAIN. SIZE PER MANUFACTURER'S RECOMMENDATION. CONNECT TO DRAINAGE STRUCTURE AS APPROVED
15	1	1	3/4" "Y" STRAINER

NOTES

1. ALL VAULT, BASED AND TOPS TO BE COATED WITH DAMPPROOFING.
2. SIZE DETERMINED ON BASIS OF ACTUAL FIRE DEMAND.
3. SEE W-19A FOR ADDITIONAL DETAILED MATERIAL NOTES.

CITY OF MERCER ISLAND
STANDARD DETAILS
WATER
MATERIAL LIST
DOUBLE DETECTOR CHECK

7-01-2014	NO SCALE	W-19B

REV DATE | APPROVED

NTS **8** Double Detector Check Valve Assembly

JACOBSON CONSULTING ENGINEERS

T:\2025 Projects\C Civil Engineering\Cad Data\Plan Sheets\C5.11 Details.dwg, 6/6/2026 8:08:36 AM, anjali grant
© ANJALI GRANT DESIGN LLC ORIGINAL SHEET SIZE: 22" X 34"

NTS
Not Used 1

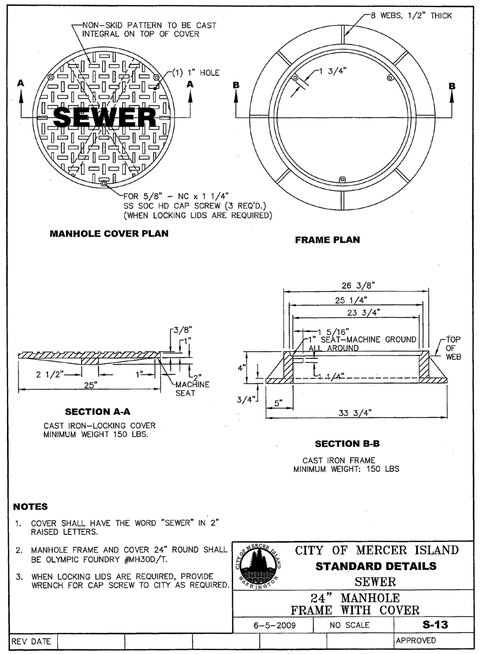

NOTES

1. COVER SHALL HAVE THE WORD "SEWER" IN 2" RAISED LETTERS.
2. MANHOLE FRAME AND COVER 24" ROUND SHALL BE OLYMPIC FOUNDRY #MH30D/T.
3. WHEN LOCKING LIDS ARE REQUIRED, PROVIDE WRENCH FOR CAP SCREW TO CITY AS REQUIRED.

CITY OF MERCER ISLAND
STANDARD DETAILS
SEWER
24" MANHOLE FRAME WITH COVER

6-5-2009	NO SCALE	**S-13**

REV DATE | APPROVED

NTS
Manhole Frame with Cover 2

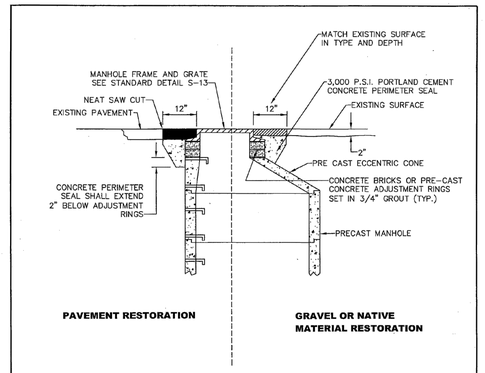

CITY OF MERCER ISLAND
STANDARD DETAILS
SEWER
MANHOLE ADJUSTMENT DETAIL

6-5-2009	NO SCALE	**S-9**

REV DATE | APPROVED

NTS
Manhole Adjustment 3

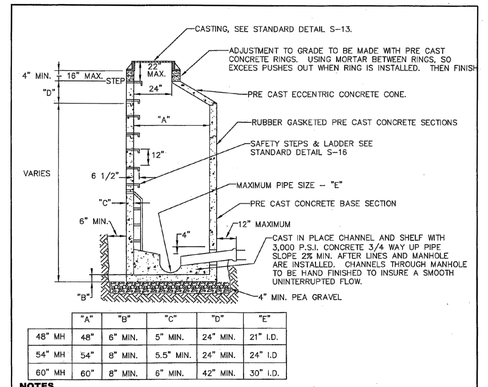

	"A"	"B"	"C"	"D"	"E"
48" MH	48"	6" MIN.	5" MIN.	24" MIN.	21" I.D.
54" MH	54"	8" MIN.	5.5" MIN.	24" MIN.	24" I.D
60" MH	60"	8" MIN.	6" MIN.	42" MIN.	30" I.D.

NOTES

1. PRE CAST SECTIONS SHALL BE REINFORCED PER ASTM SPECS FOR CORRESPONDING SEWER PIPE.
2. SAFETY STEPS, 1" MINIMUM, SEE STANDARD DETAILS S-16. STEPS IN PRE CAST BASE SECTION MAY BE CAST IN PLACE OR MOVABLE SAFETY LADDER GROUTED IN PLACE.
3. ALL HOLES FOR PIPE SHALL BE BLOCKED OUT AT THE TIME OF CASTING THE SECTION.
4. ALL RUBBER GASKETED MANHOLES SHALL BE FURNISHED WITH RUBBER GASKET JOINT CONFORMING ASTM C-443.
5. MINIMUM 2% SLOPE ACROSS MANHOLE.
6. SEE STANDARD DETAIL S-13 FOR MANHOLE FRAME AND COVER.
7. CONNECTION TO MANHOLE WITH PVC PIPE REQUIRES A PVC x CONCRETE ADAPTER.
8. ALL PIPE THROUGH MANHOLE WALL SHALL HAVE A "KOR-N-SEAL" WITH "WEDGE KORBAND" MANUFACTURED BY NPC, INC. OR APPROVED EQUAL.
9. BEDDING AND FOUNDATION MATERIAL REQUIRED AS SHOWN ON DETAIL AND AS NOTED IN THE SPECIFICATIONS.
10. LOCATION OF MANHOLE STEPS SHALL NOT BE OVER FLOW LINES AND SHALL BE APPROVED BY THE CITY ENGINEER.

CITY OF MERCER ISLAND
STANDARD DETAILS
SEWER
TYPE 1 MANHOLE 48" – 60"

6-5-2009	NO SCALE	**S-5**

REV DATE | APPROVED

NTS
Type I Manhole 4

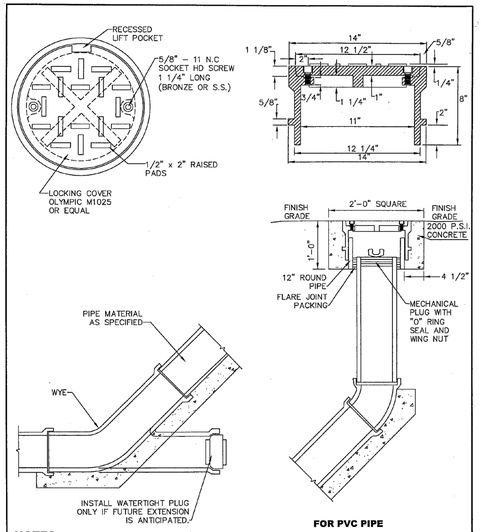

NOTES

1. SEE S-27 FOR INSTALLATION DETAILS.

CITY OF MERCER ISLAND
STANDARD DETAILS
SEWER
CLEAN OUT DETAIL

6-5-2009	NO SCALE	**S-19**

REV DATE | APPROVED

NTS
Cleanout 5

NTS
Not Used 6

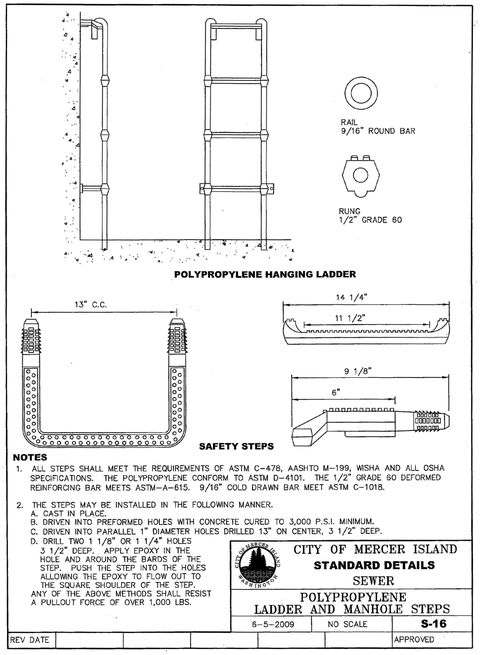

NOTES

1. ALL STEPS SHALL MEET THE REQUIREMENTS OF ASTM C-478, AASHTO M-199, WISHA AND ALL OSHA SPECIFICATIONS. THE POLYPROPYLENE CONFORM TO ASTM D-4101. THE 1/2" GRADE 60 DEFORMED REINFORCING BAR MEETS ASTM-A-615. 9/16" COLD DRAWN BAR MEET ASTM C-1018.
2. THE STEPS MAY BE INSTALLED IN THE FOLLOWING MANNER.
   A. CAST IN PLACE.
   B. DRIVEN INTO PREFORMED HOLES WITH CONCRETE CURED TO 3,000 P.S.I. MINIMUM.
   C. DRIVEN INTO PARALLEL 1" DIAMETER HOLES DRILLED 13" ON CENTER, 3 1/2" DEEP.
   D. DRILL TWO 1 1/8" OR 1 1/4" HOLES 3 1/2" DEEP. APPLY EPOXY IN THE HOLE AND AROUND THE BARDS OF THE STEP. PUSH THE STEP INTO THE HOLES ALLOWING THE EPOXY TO FLOW OUT TO THE SQUARE SHOULDER OF THE STEP. ANY OF THE ABOVE METHODS SHALL RESIST A PULLOUT FORCE OF OVER 1,000 LBS.

CITY OF MERCER ISLAND
STANDARD DETAILS
SEWER
POLYPROPYLENE LADDER AND MANHOLE STEPS

6-5-2009	NO SCALE	**S-16**

REV DATE | APPROVED

NTS
Polypropylene Ladder and Manhole Steps 7

3427 BEACON AVE S
SEATTLE 98144
ANJALI@AGRANTDESIGN.COM
206-512-4209

anjali grant design LLC

REGISTERED PROFESSIONAL ENGINEER
STATE OF WASHINGTON
43667
ANJALI D. JACOBSON
01/06/2026

3700 EAST MERCER WAY
BARNABIE POINT PROJECT

NO.	DATE	DESCRIPTION
2	01/06/2026	BLDG PERMIT CORRECTIONS
1	10/22/2025	BLDG PERMIT CORRECTIONS

06 JUNE 2025
BUILDING PERMIT

PROJECT:
UTILITY DETAILS

C5.12

JACOBSON
CONSULTING ENGINEERS

11/2/2023 4:17:30 PM C:\Users\EarthValley\Documents\INT_UNIT_Central R24_asahn7850R.rvt
© ANJALI GRANT DESIGN LLC ORIGINAL SHEET SIZE: 22" X 34"

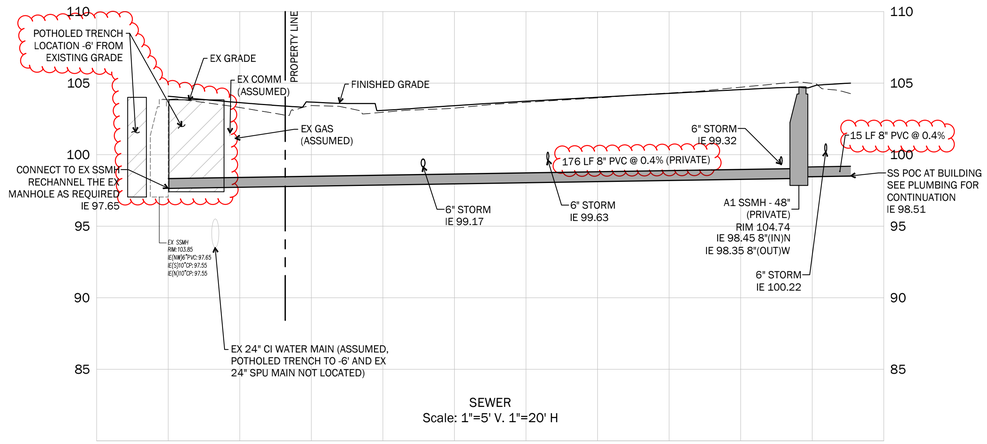

SEWER
Scale: 1"=5' V. 1"=20' H

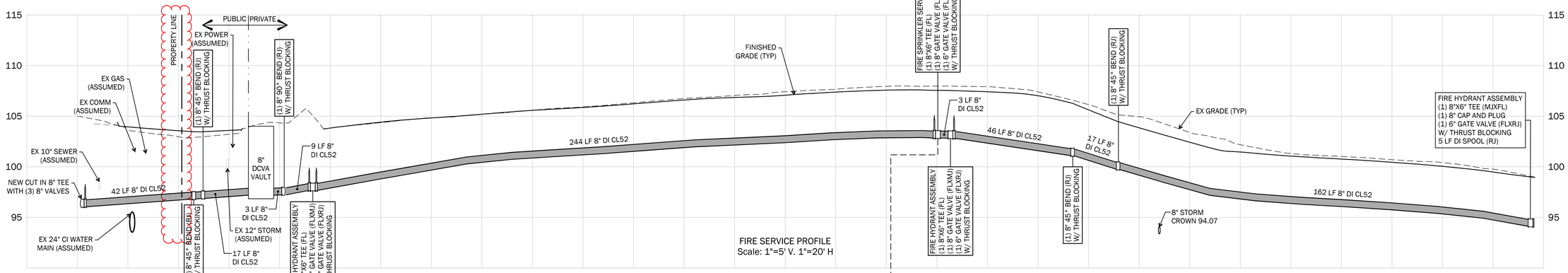

FIRE SERVICE PROFILE
Scale: 1"=5' V. 1"=20' H

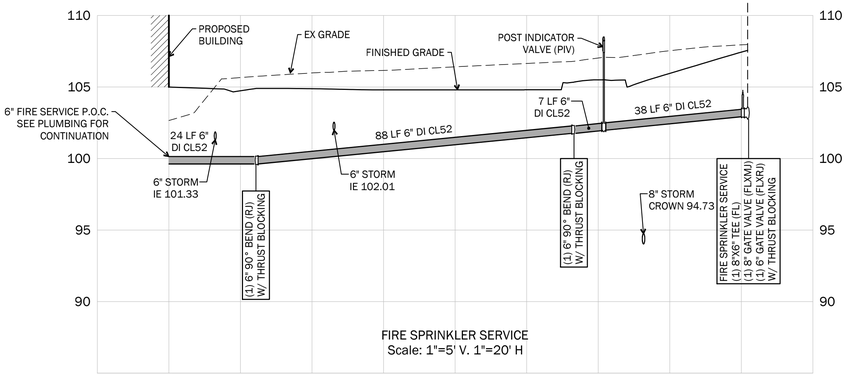

FIRE SPRINKLER SERVICE
Scale: 1"=5' V. 1"=20' H

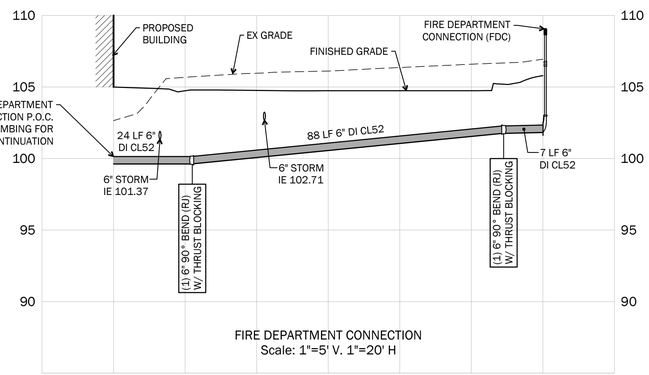

FIRE DEPARTMENT CONNECTION
Scale: 1"=5' V. 1"=20' H

3427 BEACON AVE S
SEATTLE 98144
ANJALI@AGRANTDESIGN.COM
206-512-4209

anjali grant design LLC

JEFFREY D. JACOBSON
STATE OF WASHINGTON
43667
REGISTERED PROFESSIONAL ENGINEER
01/06/2026

3700 EAST MERCER WAY
BARNABIE POINT PROJECT

NO.	DATE	DESCRIPTION
2	01/06/2026	BLDG PERMIT CORRECTIONS
1	10/22/2025	BLDG PERMIT CORRECTIONS

06 JUNE 2025
BUILDING PERMIT

PROJECT:
UTILITY PROFILES

C5.20

JACOBSON
CONSULTING ENGINEERS

11/2/2023 4:17:30 PM C:\Users\EstelleYedor\Documents\HNT_HNT_Central R24_estelle78598.rvt
© ANJALI GRANT DESIGN LLC ORIGINAL SHEET SIZE: 22" X 34"

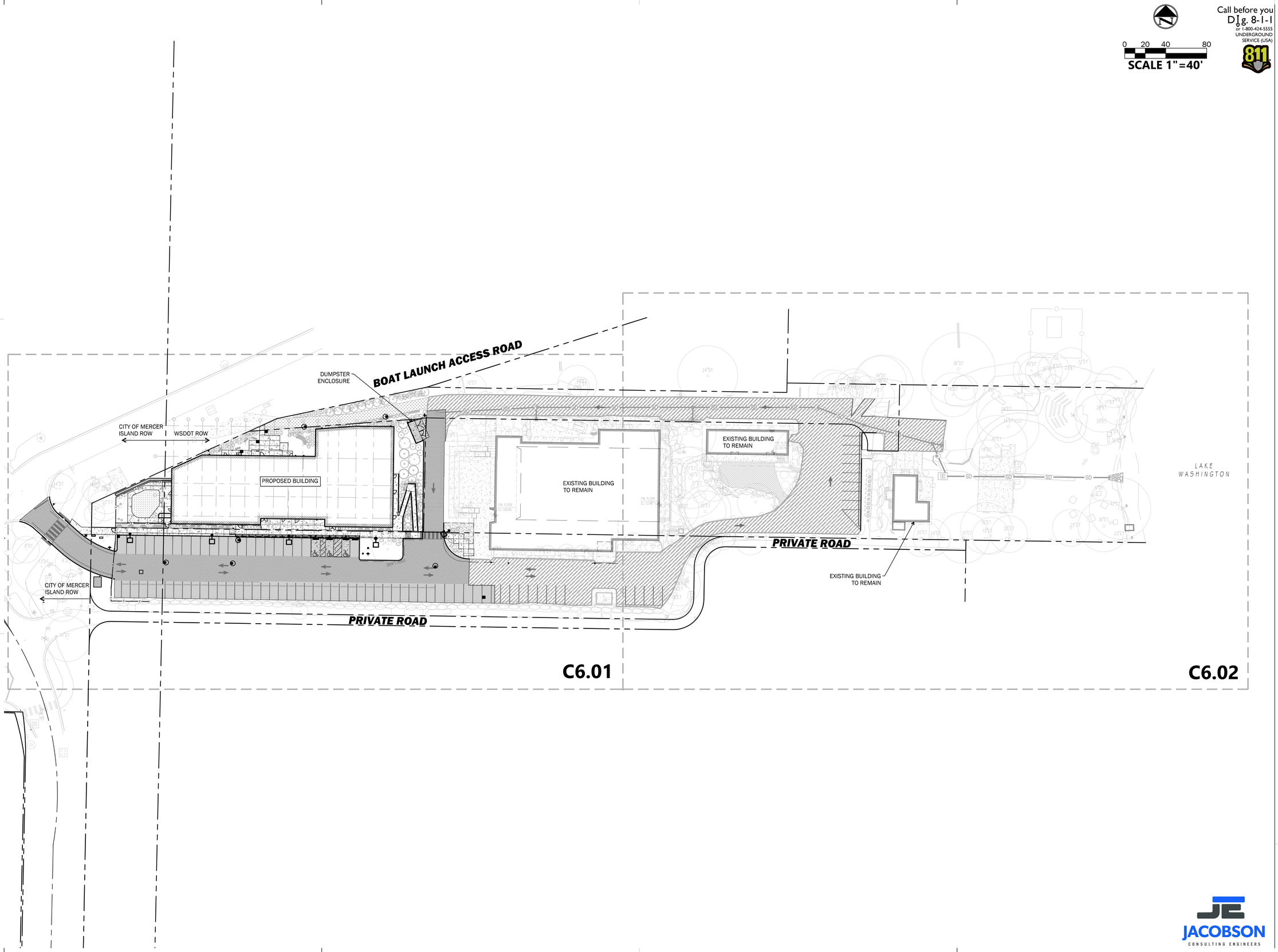

3427 BEACON AVE S
SEATTLE 98144
ANJALI@AGRANTDESIGN.COM
206-512-4209

anjali grant design LLC

JERALD A. JACOBSON
STATE OF WASHINGTON
43667
REGISTERED PROFESSIONAL ENGINEER
01/06/2026

3700 EAST MERCER WAY
BARNABIE POINT PROJECT

NO.	DATE	DESCRIPTION
2	01/06/2026	BLDG PERMIT CORRECTIONS
1	10/22/2025	BLDG PERMIT CORRECTIONS

06 JUNE 2025
BUILDING PERMIT

PROJECT:
OVERALL PAVING AND STRIPING PLAN

C6.00

JACOBSON
CONSULTING ENGINEERS

11/2/2023 4:17:30 PM C:\Users\EashaYadav\Documents\HNT_HNT_Central R24_eashaTB55R.rvt
© ANJALI GRANT DESIGN LLC ORIGINAL SHEET SIZE: 22" X 34"

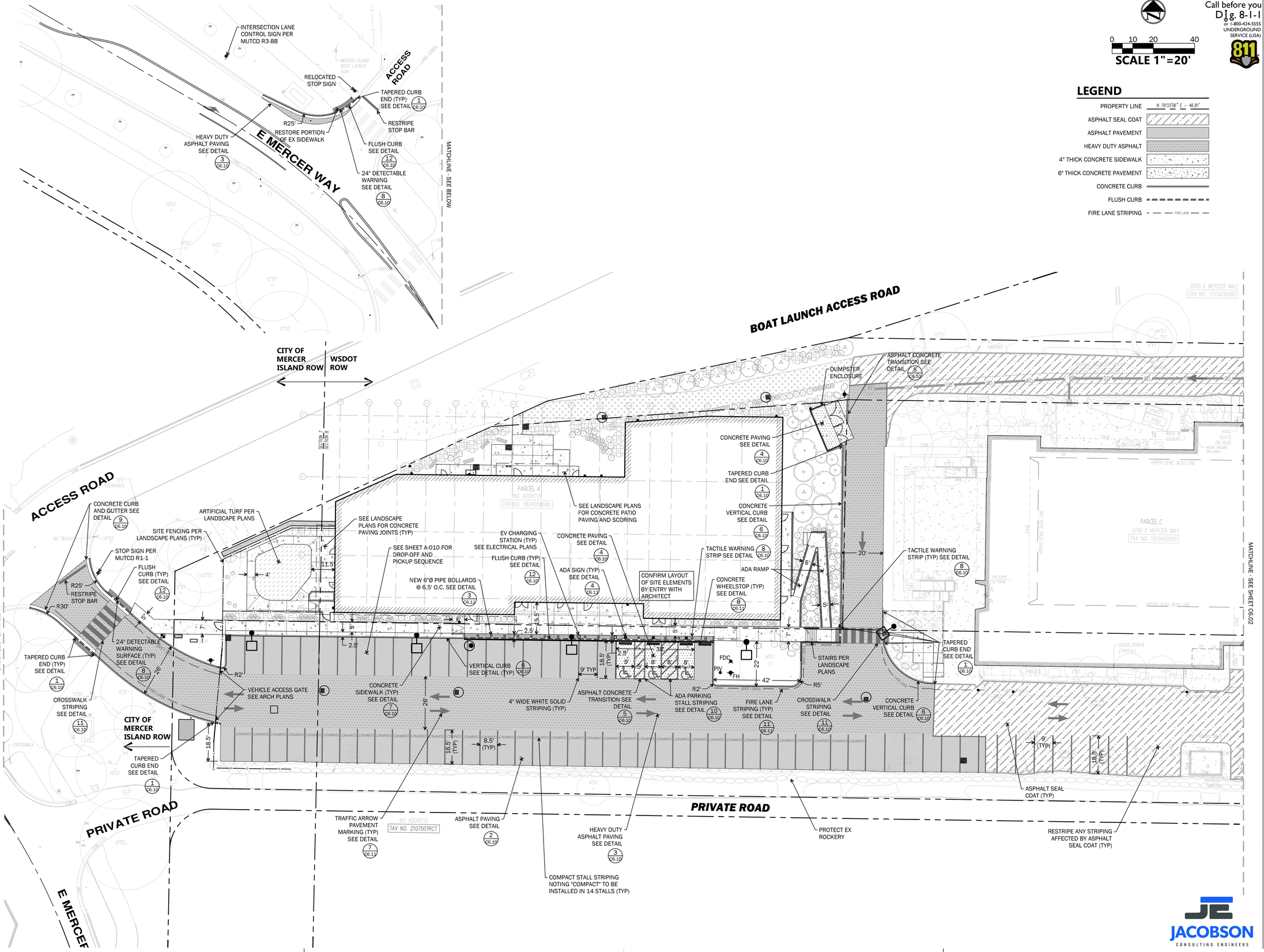

3427 BEACON AVE S
SEATTLE 98144
ANJALI@AGRANTDESIGN.COM
206-512-4209

anjali grant design LLC

JEFFREY D. JACOBSON
STATE OF WASHINGTON
43667
REGISTERED PROFESSIONAL ENGINEER
01/06/2026

3700 EAST MERCER WAY
BARNABIE POINT PROJECT

NO.	DATE	DESCRIPTION
2	01/06/2026	BLDG PERMIT CORRECTIONS
1	10/22/2025	BLDG PERMIT CORRECTIONS

06 JUNE 2025
BUILDING PERMIT

PROJECT:
PAVING AND STRIPING PLAN

C6.01

JACOBSON CONSULTING ENGINEERS

11/2/2023 4:17:30 PM C:\Users\Eamon\Desktop\Documents\WKT_UNIT_Central R24_eastsk75ESR.rvt
© ANJALI GRANT DESIGN LLC ORIGINAL SHEET SIZE: 22" X 34"

3427 BEACON AVE S
SEATTLE 98144
ANJALI@AGRANTDESIGN.COM
206-512-4209

Call before you Dig. 8-1-1
or 1-800-424-5555
UNDERGROUND SERVICE (USA)

0 10 20 40
SCALE 1"=20'

LEGEND

PROPERTY LINE	N 79°33'06" E – 46.81'
ASPHALT SEAL COAT	
ASPHALT PAVEMENT	
4" THICK CONCRETE SIDEWALK	
6" THICK CONCRETE PAVEMENT	

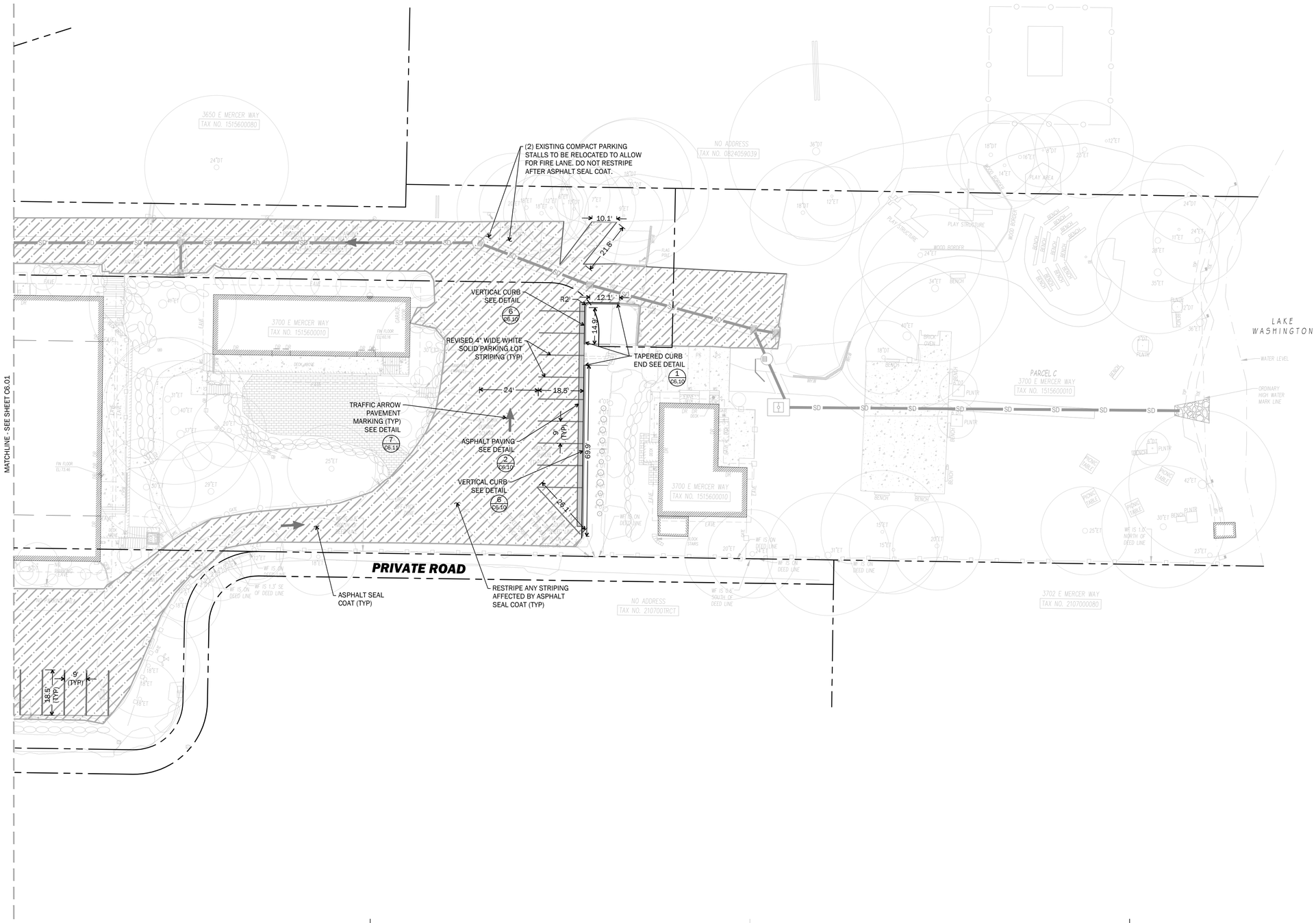

anjali grant design LLC

JERALD A. JACOBSON
STATE OF WASHINGTON
43667
REGISTERED PROFESSIONAL ENGINEER
01/06/2026

3700 EAST MERCER WAY
BARNABIE POINT PROJECT

NO.	DATE	DESCRIPTION
2	01/06/2026	BLDG PERMIT CORRECTIONS
1	10/22/2025	BLDG PERMIT CORRECTIONS

06 JUNE 2025
BUILDING PERMIT

PROJECT:
PAVING AND STRIPING PLAN

C6.02

JACOBSON
CONSULTING ENGINEERS

11/2/2024 4:17:30 PM C:\Users\EashaVindev\Documents\INT_INT_Central R24_eashaTB55R.rvt
© ANJALI GRANT DESIGN LLC ORIGINAL SHEET SIZE: 22" X 34"

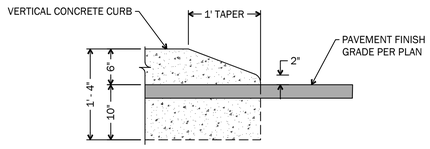

NTS
Curb Taper 1

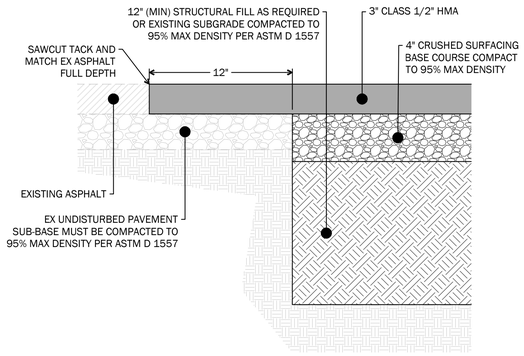

NOTES:

1. ASPHALT PAVEMENT SHALL BE PLACED IN (2) LIFTS. FINAL LIFT SHALL BE CONSTRUCTED WITH THE OVERLAY OF THE EXISTING ASPHALT ONLY AFTER BUILDING IMPROVEMENTS ARE COMPLETE

NTS
Light Asphalt Paving 2

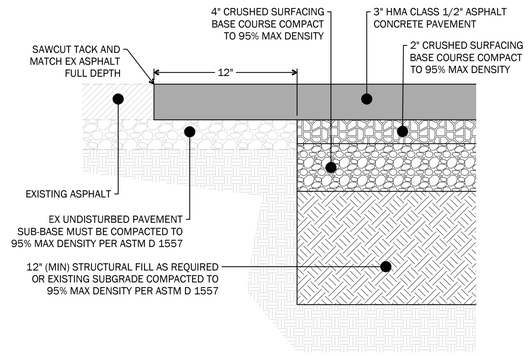

NOTES:

1. ASPHALT PAVEMENT SHALL BE PLACED IN (2) LIFTS. FINAL LIFT SHALL BE CONSTRUCTED WITH THE OVERLAY OF THE EXISTING ASPHALT ONLY AFTER BUILDING IMPROVEMENTS ARE COMPLETE

NTS
Heavy Asphalt Paving 3

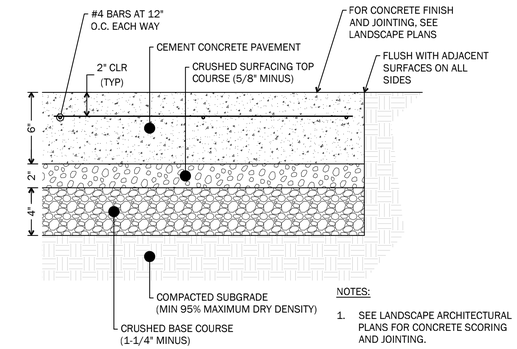

NOTES:

1. SEE LANDSCAPE ARCHITECTURAL PLANS FOR CONCRETE SCORING AND JOINTING.
2. CEMENT CONCRETE SHALL BE CLASS 4000

NOTES:

1. DEPTHS ARE COMPACTED THICKNESS
2. WHERE PERMEABLE BALLAST IS USED FOR CONSTRUCTION ACCESS AND STAGING, SOME RUTTING AND DISTURBANCE OF THE SURFACE MAY OCCUR. THE CONTRACTOR SHALL REMOVE AFFECTED AREAS AND REPLACE THEM WITH PROPERLY COMPACTED CRUSHED ROCK PRIOR TO FINAL SURFACING. WHERE PERMEABLE BALLAST IS USED, NO CRUSHED SURFACING BASE COURSE WILL BE REQUIRED UNLESS DIRECTED BY THE GEOTECHNICAL ENGINEER. SEE SHEET C3.06

NTS
Concrete Paving 4

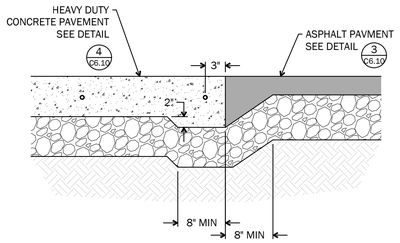

NTS
Asphalt Concrete Transition 5

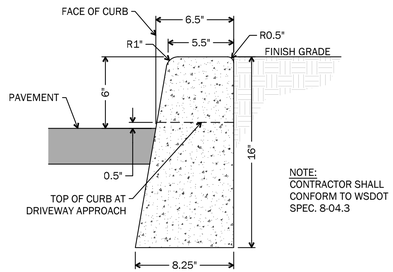

NTS
Vertical Curb 6

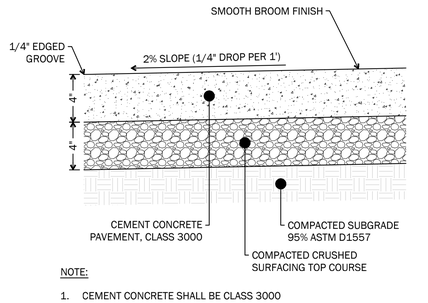

NOTE:

1. CEMENT CONCRETE SHALL BE CLASS 3000
2. DUMMY JOINTS CONSISTING OF 3/16" BY 2" PREMOLDED JOINT MATERIAL SHALL BE PLACED AT 15 FOOT INTERVALS

NTS
Concrete Sidewalk 7

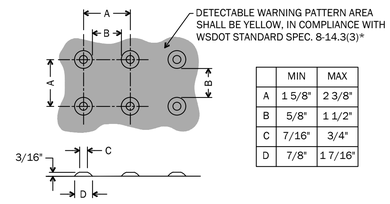

	MIN	MAX
A	1 5/8"	2 3/8"
B	5/8"	1 1/2"
C	7/16"	3/4"
D	7/8"	1 7/16"

*NOTE: DETECTABLE WARNING PATTERN ALONG THE FRONTAGE OF THE SCHOOL SHALL BE TILETECH PAVER SYSTEM, 24"x24" SQUARE, CHARCOAL COLOR OR APPROVED EQUAL

NTS
Truncated Domes 8

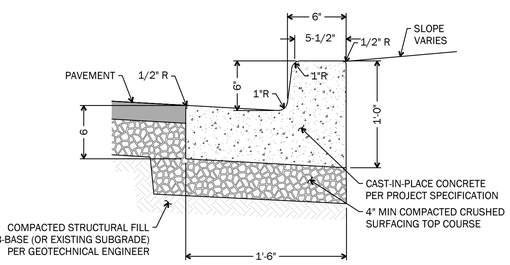

NOTES:

1. FORMS SHALL BE STEEL AND SET TRUE TO LINE AND GRADE (INSPECTION IS REQUIRED PRIOR TO PLACEMENT OF CONCRETE).
2. CONCRETE SHALL BE CEMENT CONCRETE CLASS 5-3/4 SACK OR 6 SACK, 4,000 PSI.
3. 10' THRU JOINT, ON CENTER.

NTS
Concrete Curb and Gutter 9

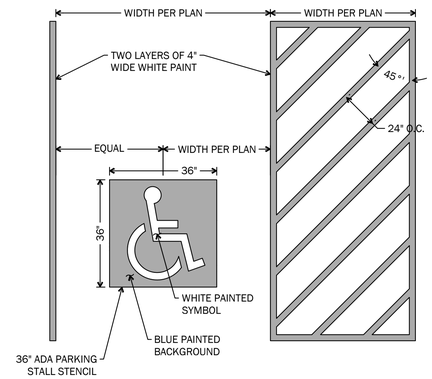

NTS
ADA Symbol and Blockout Striping 10

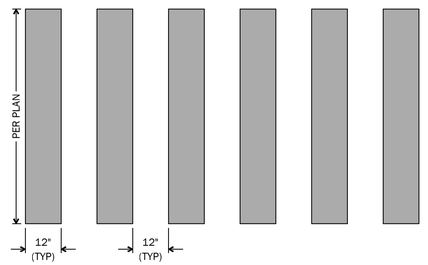

NOTES:

1. STRIPING COLOR SHALL BE "WHITE" AND PAINTED PER PROJECT SPECIFICATIONS
2. STRIPING DIMENSIONS SHALL MEET MUTC SPECIFICATION 3B-18 AND FIGURE 3-14C.

NTS
Crosswalk Striping 11

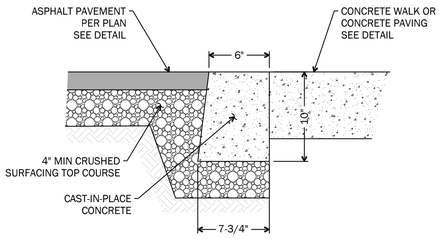

NTS
Flush Curb 12

3427 BEACON AVE S
SEATTLE 98144
ANJALI@AGRANTDESIGN.COM
206-512-4209

anjali grant design LLC

ANJALI D. A. JACOBSON
STATE OF WASHINGTON
43667
REGISTERED PROFESSIONAL ENGINEER
01/06/2026

3700 EAST MERCER WAY
BARNABIE POINT PROJECT

NO.	DATE	DESCRIPTION
2	01/06/2026	BLDG PERMIT CORRECTIONS
1	10/22/2025	BLDG PERMIT CORRECTIONS

06 JUNE 2025
BUILDING PERMIT

PROJECT:
PAVING DETAILS

C6.10

JACOBSON
CONSULTING ENGINEERS

11/2/2023 4:17:30 PM C:\Users\EliahAnn\Documents\HNT_UNIT_Central R24_eaaha1165R.rvt
© ANJALI GRANT DESIGN LLC ORIGINAL SHEET SIZE: 22" X 34"

NTS
Not Used 1

NTS
Not Used 2

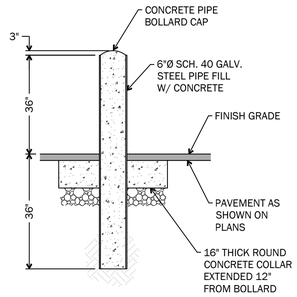

FIXED BOLLARD

NOTES:

1. PAINT STEEL AND CONCRETE DARK BRONZE COLOR
2. SUBMIT COLOR SAMPLE FOR APPROVAL PRIOR TO PAINTING
3. PROVIDE 6 INCH CONCRETE BOLLARD CAP R-1008-06 FROM RELIANCE FOUNDRY OR APPROVED EQUAL

NTS
Pipe Bollard 3

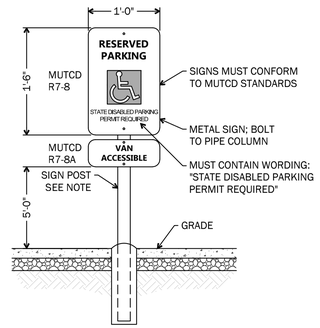

NOTE: FOR SIGNS MOUNTED ON BUILDING FACE, NO POST NEEDED.

NTS
Accessible Parking Sign 4

NTS
Not Used 5

NTS
Not Used 6

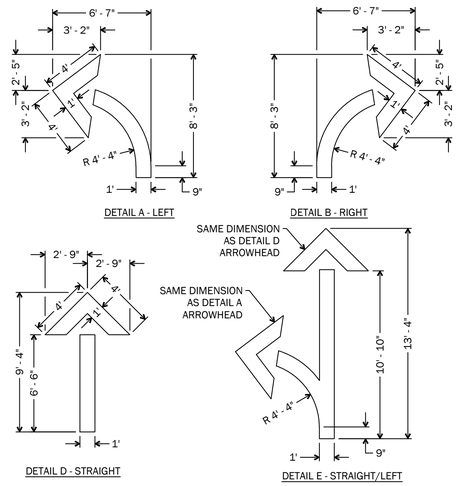

NTS
Traffic Arrows 7

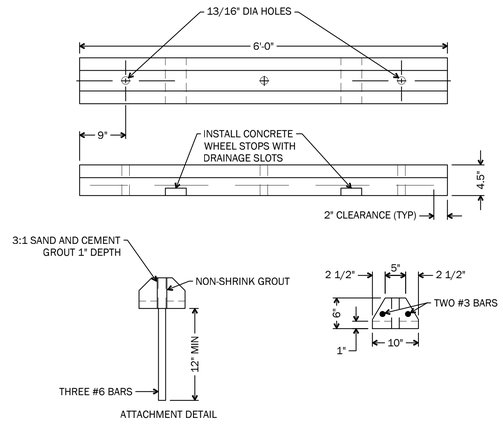

NTS
Wheel Stop 8

NTS
Not Used 9

NTS
Not Used 10

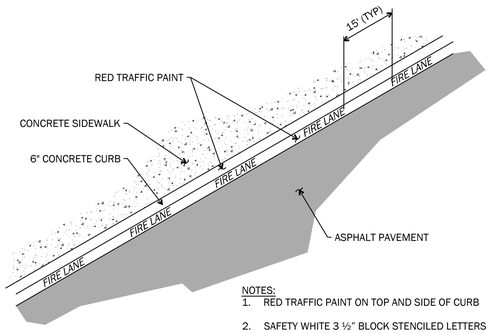

NOTES:

1. RED TRAFFIC PAINT ON TOP AND SIDE OF CURB
2. SAFETY WHITE 3 ½" BLOCK STENCILED LETTERS STATING "FIRE LANE" ARE REQUIRED EVERY 15 FEET ON THE RED CURB

NTS
Fire Lane Curb Marking 11

3427 BEACON AVE S
SEATTLE 98144
ANJALI@AGRANTDESIGN.COM
206-512-4209

anjali grant design LLC

JEFFREY D. JACOBSON
STATE OF WASHINGTON
43667
REGISTERED PROFESSIONAL ENGINEER
01/06/2026

3700 EAST MERCER WAY
BARNABIE POINT PROJECT

NO.	DATE	DESCRIPTION
2	01/06/2026	BLDG PERMIT CORRECTIONS
1	10/22/2025	BLDG PERMIT CORRECTIONS

06 JUNE 2025
BUILDING PERMIT

PROJECT:
PAVING DETAILS

C6.11

JACOBSON
CONSULTING ENGINEERS

11/2/2023 4:17:30 PM C:\Users\Elaine\Vedax\Documents\HNT_LINT_Central R24_wahe1TE55R.rvt
© ANJALI GRANT DESIGN LLC ORIGINAL SHEET SIZE: 22" X 34"

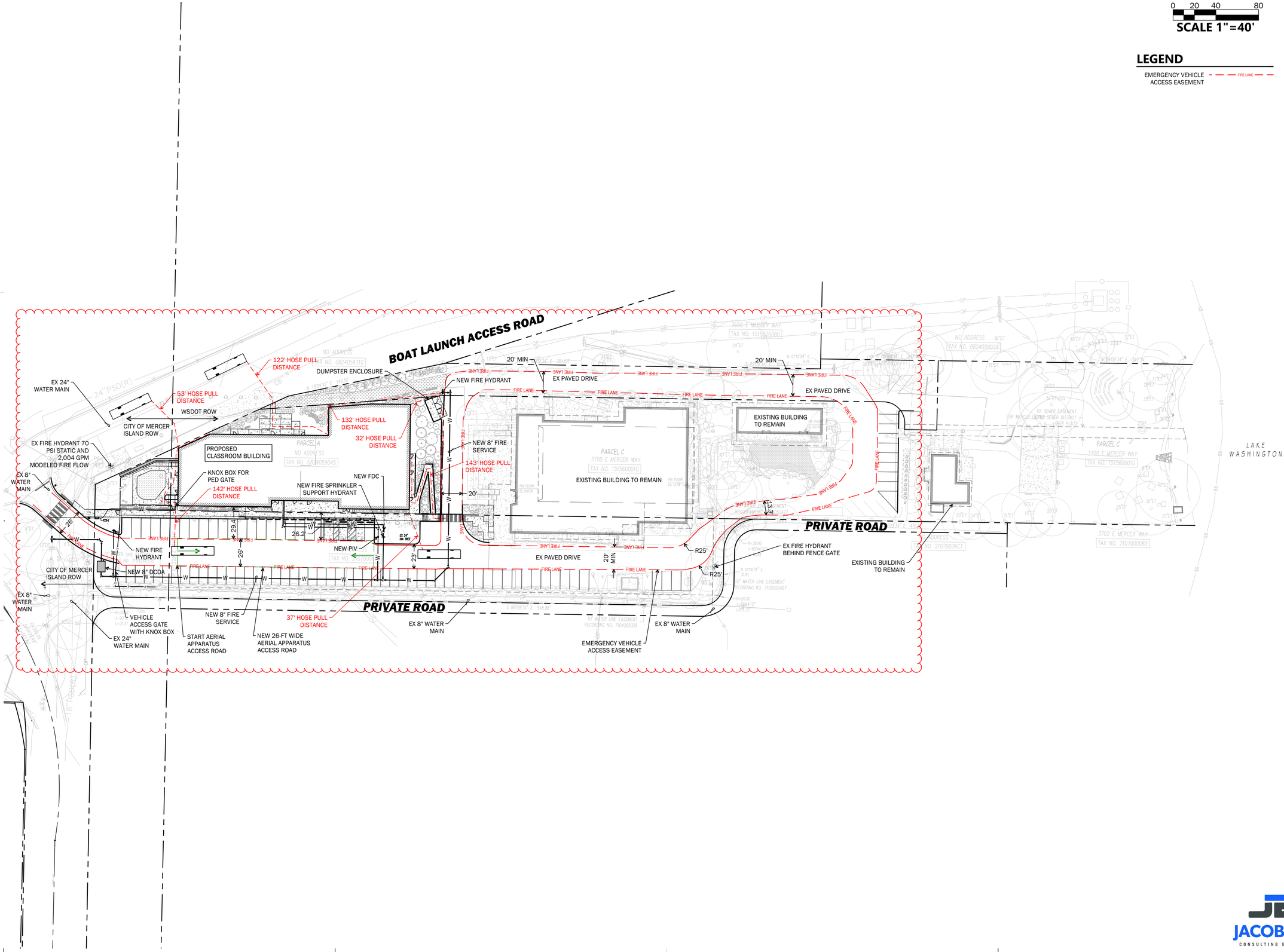

N

0 20 40 80

SCALE 1"=40'

Call before you Dig. 8-1-1 or 1-800-424-5555 UNDERGROUND SERVICE (USA)

811

LEGEND

EMERGENCY VEHICLE ACCESS EASEMENT — FIRE LANE —

3427 BEACON AVE S
SEATTLE 98144
ANJALI@AGRANTDESIGN.COM
206-512-4209

anjali grant design LLC

JEFFREY D. JACOBSON
STATE OF WASHINGTON
43667
REGISTERED PROFESSIONAL ENGINEER

01/06/2026

3700 EAST MERCER WAY
BARNABIE POINT PROJECT

NO.	DATE	DESCRIPTION
2	01/06/2026	BLDG PERMIT CORRECTIONS
1	10/22/2025	BLDG PERMIT CORRECTIONS

06 JUNE 2025
BUILDING PERMIT

PROJECT:
OVERALL FIRE ACCESS PLAN

C7.00

JACOBSON
CONSULTING ENGINEERS

11/2/2023 4:17:30 PM C:\Users\EarthArtist\Documents\INT_JINT_Central R24_asahi.T6SR.rvt
© ANJALI GRANT DESIGN LLC ORIGINAL SHEET SIZE: 22" X 34"

THE WARREN COMPANY

BARNABIE POINT PROJECT

3700 EAST MERCER WAY, MERCER ISLAND, WA

TEMPORARY SHORING WALL PLANS

SHEET NUMBER	SHEET TITLE
SH1.0	COVER SHEET AND NOTES
SH2.0	SHORING PLAN
SH3.0	WALL ELEVATION
SH4.0	DETAILS

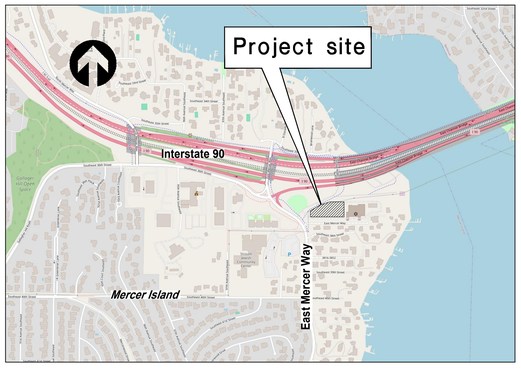

VICINITY MAP

GENERAL:

THE CONTRACTOR IS RESPONSIBLE FOR FIELD VERIFYING ALL EXISTING DIMENSIONS AND SITE CONDITIONS, DETERMINING ACTUAL LOCATIONS OF ALL EXISTING UTILITIES SHOWN ON THE PLANS AND THOSE UTILITIES OR UNDERGROUND OBSTRUCTIONS NOT SHOWN ON THE PLANS, AND FOR REMOVAL OF ALL ABANDONED UTILITIES, OR OTHER UNDERGROUND OBSTRUCTIONS THAT INTERFERE WITH THE NEW CONSTRUCTION.

THE CONTRACTOR IS RESPONSIBLE FOR THE CONSTRUCTION PROCESS AND THE SAFETY OF THE WORKERS. THIS INCLUDES BUT IS NOT LIMITED TO, THE CONSTRUCTION SEQUENCE, TEMPORARY HANDRAILS, EXCAVATION ACCESS, AND BARRIERS. IT ALSO INCLUDES LIFTING OF MATERIALS AND CONSTRUCTION EQUIPMENT INTO AND OUT OF THE EXCAVATION, TEMPORARY BRACING OF FORMWORK, TEMPORARY SHORING OF EXCAVATIONS, AND STABILITY OF ALL TEMPORARY CUT SLOPES.

REFERENCE DATA:

THE EXISTING SITE, TOPOGRAPHICAL, AND UTILITY DATA; THE PROPOSED GRADES AND UTILITIES; THE DIMENSIONS AND DEPTHS OF THE PROPOSED FOUNDATIONS; AND THE PROPOSED SHORING WALL LOCATIONS ARE BASED ON THE FOLLOWING:

- THE SITE SURVEY TITLED: "TOPOGRAPHIC SURVEY, 3700 EAST MERCER WAY, MERCER ISLAND, WASHINGTON", PREPARED BY CHADWICK & WINTERS, DATED DECEMBER 2, 2024.
- THE STRUCTURAL PLAN SHEETS TITLED: "3700 E MERCER, BARNABIE POINT PROJECT, SHEETS S-100, S-101, S-201, S-304, AND S-305", PREPARED BY PCS STRUCTURAL SOLUTIONS, DATED JUNE 4, 2025.

BUILDING CODES, DESIGN MANUALS, AND SPECIFICATIONS:

2018 INTERNATIONAL BUILDING CODE (AS AMENDED BY THE CITY OF MERCER ISLAND)

PUBLICATION NO. FHWA-IF-99-015, GEOTECHNICAL ENGINEERING CIRCULAR NO. 4, GROUND ANCHORS AND ANCHORED SYSTEMS

DESIGN SURCHARGE LOADS:

A BASIC TRAFFIC SURCHARGE OF 250 PSF VERTICAL AND 80 PSF LATERAL WAS CONSIDERED IN THE DESIGN.

DESIGN CALCULATIONS:

THE TEMPORARY SHORING WALL DESIGN CALCULATIONS ARE CONTAINED IN THE LETTER REPORT TITLED: "TEMPORARY SHORING WALL DESIGN CALCULATIONS AND PLANS, BARNABIE POINT PROJECT, 3700 EAST MERCER WAY, MERCER ISLAND, WA", PREPARED BY GROUND SUPPORT PLLC FOR WARREN COMPANY, DATED NOVEMBER 12, 2025.

SHORING DESIGN CRITERIA:

THE SUBSURFACE DESIGN PARAMETERS AND SHORING WALL DESIGN CRITERIA ARE BASED UPON THE FOLLOWING PROJECT GEOTECHNICAL REPORT: "SUBSURFACE EXPLORATION, GEOLOGIC HAZARD, AND GEOTECHNICAL ENGINEERING REPORT, HERZL-NER TAMID CONSERVATIVE CONGREGATION K-8 EXPANSION, MERCER ISLAND, WASHINGTON", PREPARED BY ASSOCIATED EARTH SCIENCES INC., DATED DECEMBER 12, 2024. THE EARTH PRESSURE DIAGRAMS AND SHORING DESIGN CRITERIA ARE SHOWN ON THIS SET OF PLANS.

GROUNDWATER / DEWATERING:

GROUNDWATER WAS NOT ENCOUNTERED DURING THE SOILS INVESTIGATION. THEREFORE, FOR THE PURPOSES OF DESIGN OF THE SHORING WALL, THE WATER TABLE HAS BEEN ASSUMED TO OCCUR BENEATH THE BASE OF THE EXCAVATION. NEVERTHELESS, LOCALIZED WET ZONES AND/OR PERCHED POCKETS AND STRINGERS OF WATER-BEARING SOILS MAY BE ENCOUNTERED AT ANY TIME. THE WALL FACE EXCAVATION MUST PROCEED CAUTIOUSLY TO AVOID EXCESSIVE GROUND LOSS OR DISTURBANCE IN AREAS OF WATER BEARING SOILS. GAPS IN THE TIMBER LAGGING WILL PROVIDE A FREE-DRAINING FACE CONDITION, AND SUMP PUMPS AND TRENCHES MAY BE REQUIRED AT THE EXCAVATION BASE TO CONTROL WATER INSIDE THE SITE.

TIMBER LAGGING:

ALL LAGGING BOARDS SHALL BE PRESSURE-TREATED, IN GOOD CONDITION, AND SHALL BE HEM-FIR NO. 2 OR BETTER, WITH AN ALLOWABLE FLEXURAL STRESS FB=1020 PSI (WHICH INCLUDES ALL APPLICABLE FLAT-USE AND SIZE FACTORS). ALL LAGGING BOARDS SHALL BE PRESSURE-TREATED IN ACCORDANCE WITH AWPA STANDARD C14 (FOR END USE CLASSIFICATION 4A), TO A MINIMUM RETENTION OF 0.40 PCF, USING THE CCA PROCESS (COMMERCIAL PRODUCT NAME OSMOSE OR APPROVED EQUAL). ALTERNATIVE TREATMENT PROCESSES MAY BE SUBMITTED TO GROUND SUPPORT PLLC FOR APPROVAL.

THE CONTRACTOR SHALL EXCAVATE THE WALL FACE AND INSTALL THE LAGGING IN SUCH A MANNER AS TO MAINTAIN A SAFE WORK PLACE AND AVOID EXCESSIVE SLOUGHING AND OVERBREAK. BACKFILL BEHIND LAGGING BOARDS WITH A FREE-DRAINING GRANULAR MATERIAL, OR NATIVE SOILS IF APPROVED BY THE GEOTECHNICAL ENGINEER.

AS A MINIMUM, PRIOR TO PLACING THE SUBSEQUENT SET OF TIMBER LAGGING, DO NOT EXCAVATE MORE THAN 4 FEET BELOW THE CURRENT DEPTH OF LAGGED WALL FACE. ALONG ANCHORED WALLS, DO NOT EXCAVATE MORE THAN 2 FEET BELOW THE CURRENT LEVEL OF ANCHORS UNTIL THE THOSE ANCHORS ARE INSTALLED, CURED, TESTED, AND STRESSED.

LEAN-MIX CONCRETE:

ALL LEAN-MIX CONCRETE SHALL HAVE A MINIMUM OF 1 SACK (94 LBS) OF CEMENT AND 100 LBS OF FLY ASH PER CUBIC YARD OF CONCRETE. PORTLAND CEMENT SHALL BE TYPE I, II, OR III CONFORMING TO ASTM C150 / AASHTO M85. FLY ASH SHALL BE TYPE F CONFORMING TO ASTM C618.

SLUMP FOR ALL LEAN-MIX CONCRETE SHALL NOT BE LESS THAN 5 INCHES AND NO GREATER THAN 9 INCHES. ADMIXTURES SHALL CONFORM TO THE REQUIREMENTS OF ASTM C494 / AASHTO M194, SHALL BE USED IN ACCORDANCE WITH THE MANUFACTURER'S RECOMMENDATIONS, AND SHALL BE APPROVED BY THE ENGINEER.

AGGREGATES SHALL CONFORM TO THE REQUIREMENTS OF ASTM C33 / AASHTO M6 FOR FINE AGGREGATES AND AASHTO M80, CLASS B FOR COARSE AGGREGATES.

STRUCTURAL STEEL:

ALL STRUCTURAL STEEL WIDE FLANGE AND OTHER ROLLED SHAPES SHALL CONFORM TO ASTM A572 / AASHTO M270, GRADE 50. ALL STRUCTURAL STEEL PLATES SHALL CONFORM TO ASTM A36 / AASHTO M270, GRADE 36. ALL RECTANGULAR STEEL TUBE WALERS SHALL CONFORM TO ASTM A500, GRADE B; AND ALL PIPES SHALL CONFORM TO ASTM A53 GRADE B, UNLESS SHOWN OTHERWISE ON THE PLANS, OR APPROVED OTHERWISE BY THE ENGINEER.

STRUCTURAL WELDING:

MINIMUM WELD SIZE 1/4" CONTINUOUS FILLET. MINIMUM WELD LENGTH 2 INCHES. ALL WELDING TO BE PERFORMED BY WABO-CERTIFIED WELDERS PER AWS STANDARD SPECIFICATIONS. USE E70XX ELECTRODES.

DRILLED SOLDIER PILES:

THE MINIMUM REQUIRED STRUCTURAL STEEL W-SHAPES FOR THE SOLDIER PILES ARE INDICATED ON THE PLANS. ALTERNATIVE STEEL SECTIONS MAY BE USED PROVIDED THAT THE SECTION MODULUS OF EACH ALTERNATIVE STEEL SECTION ARE EQUAL TO OR GREATER THAN THE CROSS-SECTIONAL AREA AND SECTION MODULUS OF THE CORRESPONDING STEEL SECTION SHOWN ON THE PLANS, AND IS APPROVED BY THE SHORING DESIGNER.

SHAFTS SHALL BE CONSTRUCTED SO THAT THE CENTER AT THE TOP OF THE SHAFT IS WITHIN +/- 3 INCHES OF THE PLAN LOCATION. SHAFTS SHALL BE PLUMB. THE ELEVATION AT THE TOP OF SHAFT SHALL BE +/- 3 INCHES FROM THE PLAN LOCATION. DURING CONSTRUCTION FOR THE SHAFTS, THE CONTRACTOR SHALL MAKE FREQUENT CHECKS ON THE PLUMBNESS, ALIGNMENT, AND DIMENSIONS OF THE SHAFTS. ANY DEVIATION EXCEEDING THE ALLOWABLE TOLERANCES SHALL BE CORRECTED IMMEDIATELY.

THE STEEL SOLDIER PILES SHALL BE PLACED SO THAT THE CENTER OF THE PILE IS WITHIN +/- 1 INCH OF THE PLAN LOCATION AT THE TOP OF THE PILE, AND WITHIN 1% OF VERTICAL WITH DEPTH.

SHAFTS SHALL BE EXCAVATED TO THE REQUIRED DEPTH AS SHOWN ON THE PLANS. THE EXCAVATION SHALL BE COMPLETED IN A CONTINUOUS OPERATION USING EQUIPMENT CAPABLE OF EXCAVATING THROUGH THE TYPE OF MATERIAL EXPECTED TO BE ENCOUNTERED.

IF THE SHAFT EXCAVATION IS STOPPED WITH THE APPROVAL OF THE ENGINEER, THE SHAFT SHALL BE SECURED BY INSTALLATION OF A SAFETY COVER. IT SHALL BE THE CONTRACTOR'S RESPONSIBILITY TO ENSURE THE SAFETY OF THE SHAFT AND SURROUNDING SOIL AND THE STABILITY OF THE SIDE WALLS. A TEMPORARY CASING SHOULD BE USED IF NECESSARY TO ENSURE SUCH SAFETY AND STABILITY.

WHERE CAVING CONDITIONS ARE ENCOUNTERED, FURTHER EXCAVATION WILL NOT BE ALLOWED UNTIL THE CONTRACTOR SELECTS A METHOD TO PREVENT GROUND MOVEMENT. THE CONTRACTOR MAY ELECT TO PLACE A TEMPORARY CASING OR USE OTHER METHODS APPROVED BY THE ENGINEER.

THE CONTRACTOR SHALL USE APPROPRIATE MEANS (SUCH AS A CLEANOUT BUCKET), TO CLEAN THE BOTTOM OF THE EXCAVATION SUCH THAT NO MORE THAN 2 INCHES OF LOOSE OR DISTURBED MATERIAL IS PRESENT.

WHEN UNEXPECTED OBSTRUCTIONS, WHICH REQUIRE SPECIALIZED EQUIPMENT AND/OR LABOR ARE ENCOUNTERED, THE CONTRACTOR SHALL NOTIFY THE ENGINEER PROMPTLY AND THE OBSTRUCTIONS SHALL BE REMOVED AND THE EXCAVATION CONTINUED IN A MANNER APPROVED BY THE ENGINEER.

TEMPORARY CASINGS FOR THE SHAFTS SHALL BE REMOVED. A MINIMUM 5 FOOT HEAD OF CONCRETE MUST BE MAINTAINED TO BALANCE THE SOIL AND WATER PRESSURE AT THE BOTTOM OF THE CASING DURING REMOVAL. THE CASING SHALL BE SMOOTH.

SHAFT CONCRETE SHALL BE PLACED AS SHOWN ON THE PLANS AND SHALL COMMENCE WITHIN 2 HOURS AFTER COMPLETION OF THE EXCAVATION. SHAFT CONCRETE SHALL BE PLACED IN ONE CONTINUOUS OPERATION TO THE TOP OF THE SHAFT.

IF WATER IS NOT PRESENT, THE CONCRETE SHALL BE DEPOSITED BY A METHOD WHICH PREVENTS AGGREGATE SEGREGATION. THE CONTRACTOR'S METHOD FOR DEPOSITING CONCRETE SHALL HAVE APPROVAL OF THE ENGINEER PRIOR TO CONCRETE PLACEMENT.

IF WATER IS PRESENT, THE CONCRETE SHALL BE DEPOSITED BY TREMIE PLACEMENT METHODS.

SPECIAL INSPECTION OF THE SHORING WALLS:

IN ACCORDANCE WITH SECTION 1704 OF IBC (2018), SPECIAL INSPECTION IS REQUIRED FOR THE FOLLOWING SHORING ITEMS OR PROCESSES: SOLDIER PILE INSTALLATION.

SHORING MONITORING:

SURVEY MONITORING OF THE SHORING WALLS, SHALL BE PERFORMED TO DETERMINE THE VERTICAL AND HORIZONTAL MOVEMENT OF THE MONITORING POINTS. THE MEASURING SYSTEM SHALL HAVE AN ACCURACY OF AT LEAST 0.01 FEET.

THE MONITORING PROGRAM SHALL BE DETERMINED BY THE GEOTECHNICAL SPECIAL INSPECTOR BUT, AT A MINIMUM, SHALL INCLUDE THE FOLLOWING:

- MONITORING POINTS SHALL CONSIST OF RODS OR BOLTS EMBEDDED INTO THE OBJECT OF INTEREST OR CROSS-HAIRS INSCRIBED ONTO A PLATE THAT IS ATTACHED TO THE OBJECT OF INTEREST.

- MONITORING POINTS SHALL BE ESTABLISHED: (1) A MAXIMUM OF 25 FEET ON CENTER AT THE TOP OF THE WALLS, (2) A MAXIMUM OF 25 FEET ON CENTER A DISTANCE OF 5 FEET BEHIND THE SHORING WALLS WHERE THERE ARE NO ADJACENT BUILDINGS, (3) A MAXIMUM OF 25 FEET ON CENTER A DISTANCE BEHIND THE SHORING WALLS WHERE THERE ARE NO ADJACENT BUILDINGS NO GREATER THAN HALF THE EXCAVATION HEIGHT OF THE WALL, AND (4) ON ANY ADJACENT STRUCTURES THAT ARE LOCATED WITHIN A HORIZONTAL DISTANCE EQUAL TO THE WALL HEIGHT ALONG THE SHORING WALLS.

- READINGS SHALL BE TAKEN AND REPORTED AT LEAST TWICE A WEEK, ONE TIME OF WHICH MUST BE BY A LICENSED SURVEYOR.

MONITORING DATA SHALL BE DISTRIBUTED TO THE GEOTECHNICAL ENGINEER, THE SHORING DESIGN ENGINEER, AND THE GENERAL CONTRACTOR FOR REVIEW.

THE EXPECTED LATERAL SHORING WALL MOVEMENT IS ON THE ORDER OF 1/2" TO 3/4" FOR ALL WALLS UNLESS NOTED OTHERWISE. THE ANCHORED WALL ADJACENT TO THE AVALON TOWERS IS EXPECTED TO MOVE ABOUT 1/4" OR LESS, AND THE WALLS ADJACENT TO THE EXISTING BUILDINGS ALONG THE EAST AND WEST WALLS ARE EXPECTED TO MOVE LESS THAN 1/2".

IF MOVEMENTS ARE TRACKING TO EXCEED THESE FINAL VALUES, THE EXCAVATION SHALL BE HALTED UNTIL FURTHER REVIEW BY GROUND SUPPORT PLLC.

anjali grant design PLLC
3427 BEACON AVE S
SEATTLE 98144
ANJALI@AGRANTDESIGN.COM
206-512-4209

CHRIS J. WOLSCHLAG, STATE OF WASHINGTON, 24822, REGISTERED PROFESSIONAL ENGINEER

11/12/25

Ground Support PLLC
15704 NE 157th St
Woodinville, WA 98072
Ph: (425) 922-1501

3700 E MERCER WAY
BARNABIE POINT PROJECT

NO.	DATE	DESCRIPTION
		4 JUNE 2025 BUILDING PERMIT

PROJECT:

COVER SHEET & NOTES

SH1.0

10/30/2025 2:22:48 PM C:\Users\EarlyWater\Documents\BPP_PCS_SH_CD_earlyTB508.rvt
© ANJALI GRANT DESIGN LLC ORIGINAL SHEET SIZE: 24" X 36"

WALL KEY PLAN

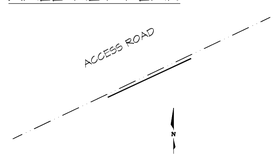

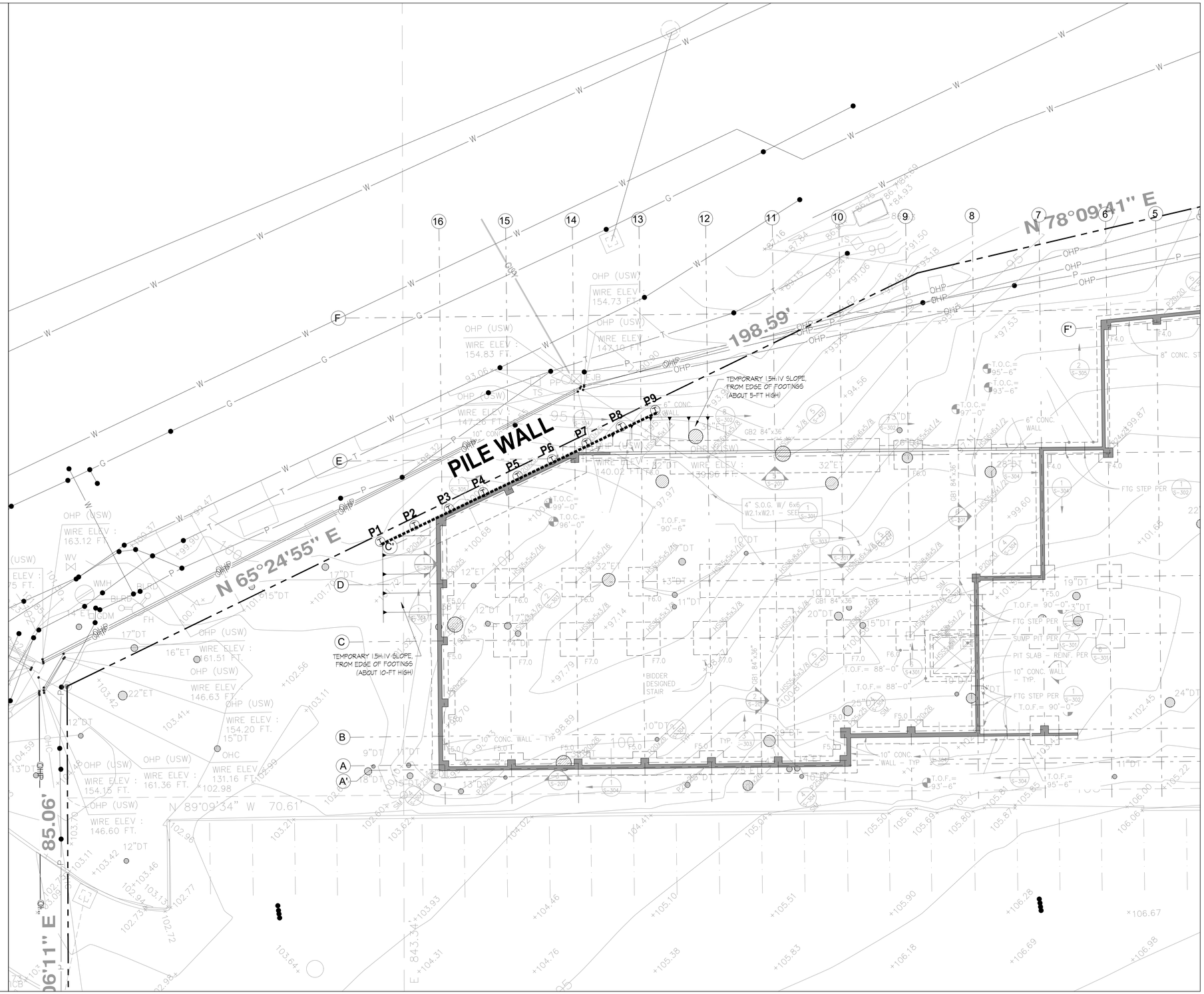

N

0 10 20
FEET

LEGEND

N1 (I)	SOLDIER PILE
	GROUND ANCHOR
B	BUILDING GRID LOCATION
100	FACE OF SOLDIER PILE WALL / EXISTING GRADE CONTOUR
	PROPOSED BUILDING WALL

10/3/2025 2:22:48 PM C:\Users\Esahy\Water\Documents\BPP\ PSR_R24_CD_esahyTMSR.rvt
© ANJALI GRANT DESIGN LLC ORIGINAL SHEET SIZE: 24" X 36"

anjali grant design PLLC
3427 BEACON AVE S
SEATTLE 98144
ANJALI@AGRANTDESIGN.COM
206-512-4209

CHRIS J. WOLSCHLAG — STATE OF WASHINGTON — 24822 — REGISTERED PROFESSIONAL ENGINEER
11/12/25

Ground Support PLLC
15704 NE 157th St
Woodinville, WA 98072
Ph: (425) 922-1501

3700 E MERCER WAY
BARNABIE POINT PROJECT

NO.	DATE	DESCRIPTION
	4 JUNE 2025	BUILDING PERMIT

PROJECT:

SHORING PLAN

SH2.0

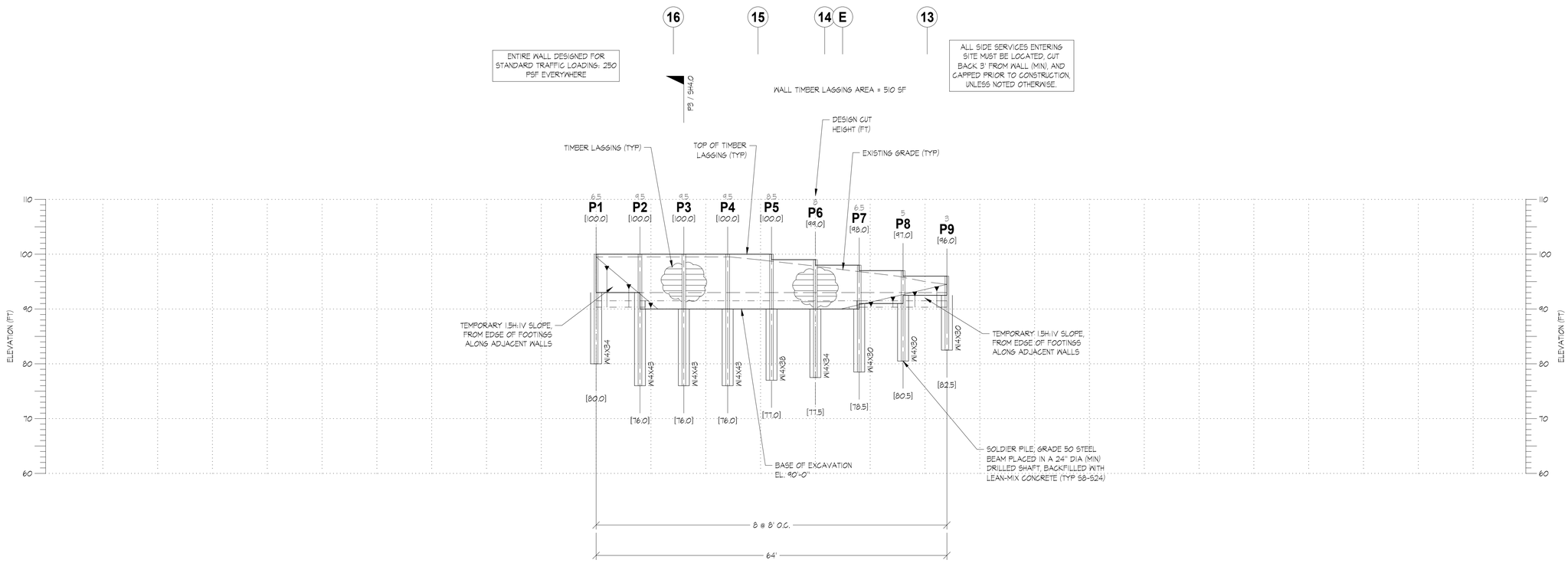

LEGEND

- P1 — PILE NUMBER
- [94.5] — TOP OF SOLDIER PILE (FEET)
- SOLDIER PILE
- GROUND ANCHOR
- DRILLHOLE
- [61.0] — BOTTOM OF SOLDIER PILE (FEET)
- B — BUILDING GRID LOCATION
- A / SH4.0 — CROSS SECTION LOCATION AND IDENTIFICATION

WALL KEY PLAN

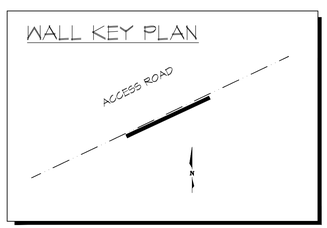

0 10 20
FEET

10/3/2025 2:22:48 PM C:\Users\EvelynVeiler\Documents\BIPP_PSE_SD4_CD_evelynTESSR.rvt
© ANJALI GRANT DESIGN LLC ORIGINAL SHEET SIZE: 24" X 36"

anjali grant design PLLC
3427 BEACON AVE S
SEATTLE 98144
ANJALI@AGRANTDESIGN.COM
206-512-4209

CHRIS J. WOLSCHLAG — STATE OF WASHINGTON — 24822 — REGISTERED PROFESSIONAL ENGINEER
11/12/25

Ground Support PLLC
15704 NE 157th St
Woodinville, WA 98072
Ph: (425) 922-1501

3700 E MERCER WAY
BARNABIE POINT PROJECT

NO.	DATE	DESCRIPTION
	4 JUNE 2025	BUILDING PERMIT

PROJECT:

WALL ELEVATION

SH3.0

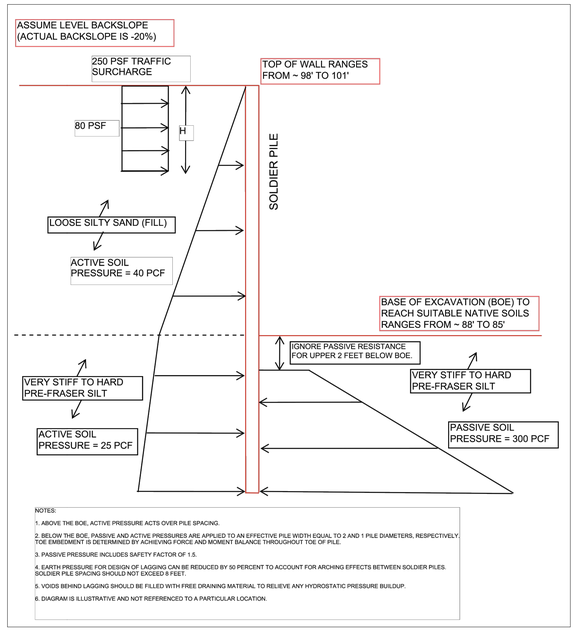

1 / SH4.0 — SHORING DESIGN DIAGRAM CANTILEVERED PILES — NOT TO SCALE

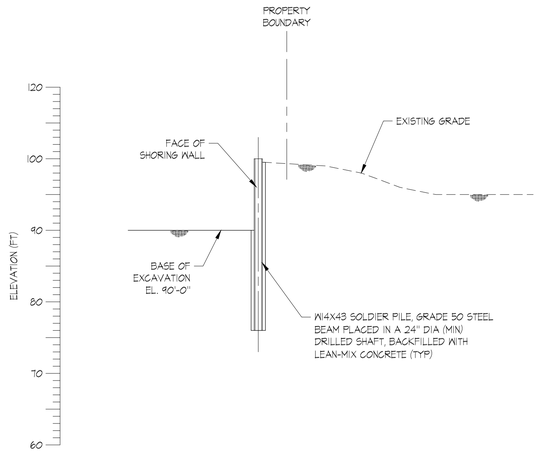

P3 / SH4.0 — TYPICAL WALL CROSS-SECTION — 0 10 FEET

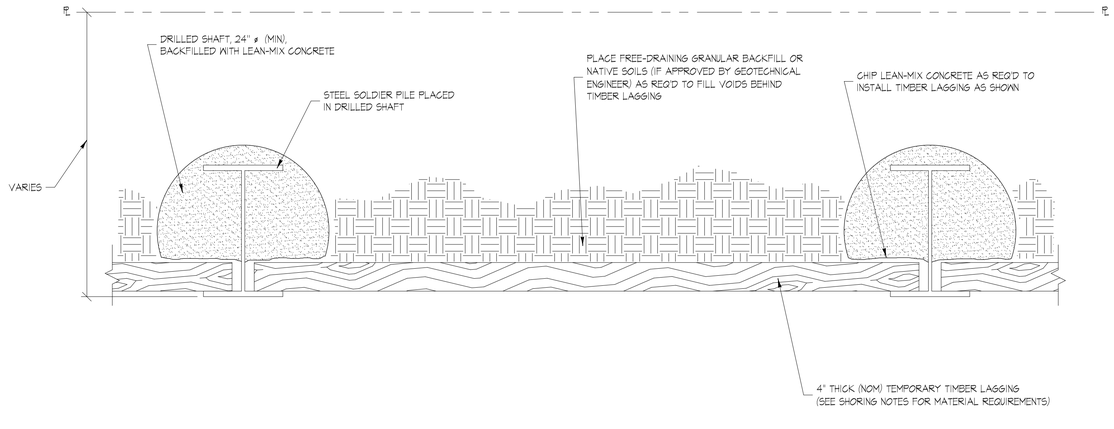

3 / SH4.0 — PILE / SHAFT / TIMBER LAGGING PLACEMENT DETAIL — NOT TO SCALE

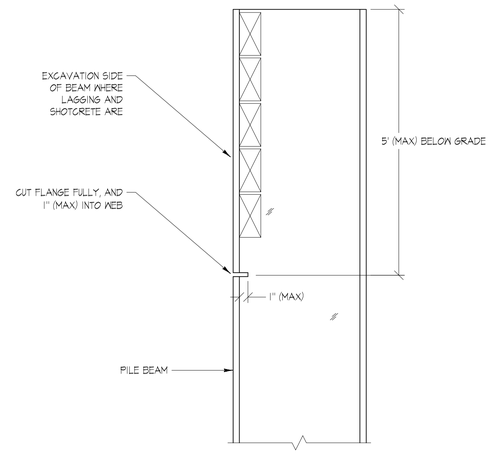

4 / SH4.0 — COURTESY CUT DETAIL (WHERE NEEDED) — NOT TO SCALE

3427 BEACON AVE S
SEATTLE 98144
ANJALI@AGRANTDESIGN.COM
206-512-4209

anjali grant design PLLC

CHRIS J. WOLSCHLAG — STATE OF WASHINGTON — 24822 — REGISTERED PROFESSIONAL ENGINEER
11/12/25

Ground Support PLLC
15704 NE 157th St
Woodinville, WA 98072
Ph: (425) 922-1501

3700 E MERCER WAY
BARNABIE POINT PROJECT

NO.	DATE	DESCRIPTION
	4 JUNE 2025	BUILDING PERMIT

PROJECT:

DETAILS

SH4.0

10/30/2025 2:22:48 PM C:\Users\Estate\Vault\Documents\BPP_PSB_BOL_CD_estate1565R.rvt
© ANJALI GRANT DESIGN LLC ORIGINAL SHEET SIZE: 24" X 36"

Karen Kiest
Landscape Architects
111 west john street suite 306
seattle washington 98119
tel 206 323 6032

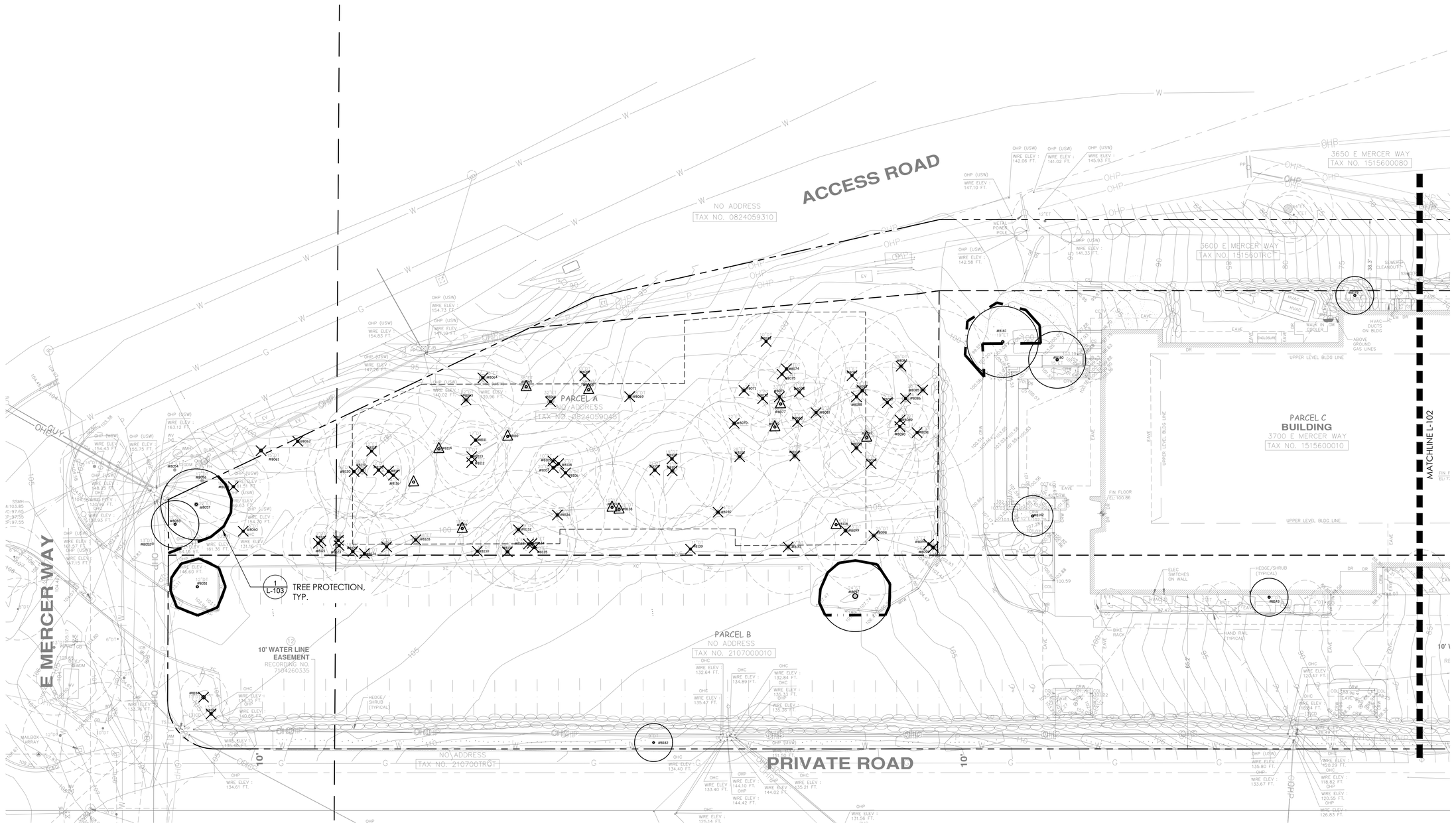

1 Tree Protection Plan - West
scale 1" = 20' - 0"

0 20 40

TREE PROTECTION

TREE PROTECTION PER CITY OF MERCER ISLAND
REFER TO DET. 1, SHEET L-103

SIGNIFICANT TREES

SIGNIFICANT TREE TO REMAIN & BE PROTECTED:
REFER TO TREE TABLE, SHEET L-103 FOR IDENTIFICATION & SIZE.

TREE TO BE REMOVED:
REFER TO TREE TABLE, SHEET L-103 FOR IDENTIFICATION & SIZE.

TREE TO BE REMOVED:
TREE IN POOR CONDITION PER ARBORIST TREE REPORT.
REFER TO TREE TABLE, SHEET L-103 FOR IDENTIFICATION & SIZE.

NOTE: Tree identification, canopy dripline, and diameter at standard height (dsh) based on tree report by Davey Resource Group, Inc., Contact: Ian Scott, dated September 29, 2023

3700 E MERCER WAY
BARNABIE POINT K-8

NO.	DATE	DESCRIPTION
2	01/06/2026	BLDG PERMIT CORRS
1	10/22/2025	BLDG PERMIT CORRS

4 JUNE 2025
BUILDING PERMIT

PROJECT: HNTS

TREE PROTECTION PLAN - WEST

L-101

© ANJALI GRANT DESIGN LLC
ORIGINAL SHEET SIZE: 24" X 36"

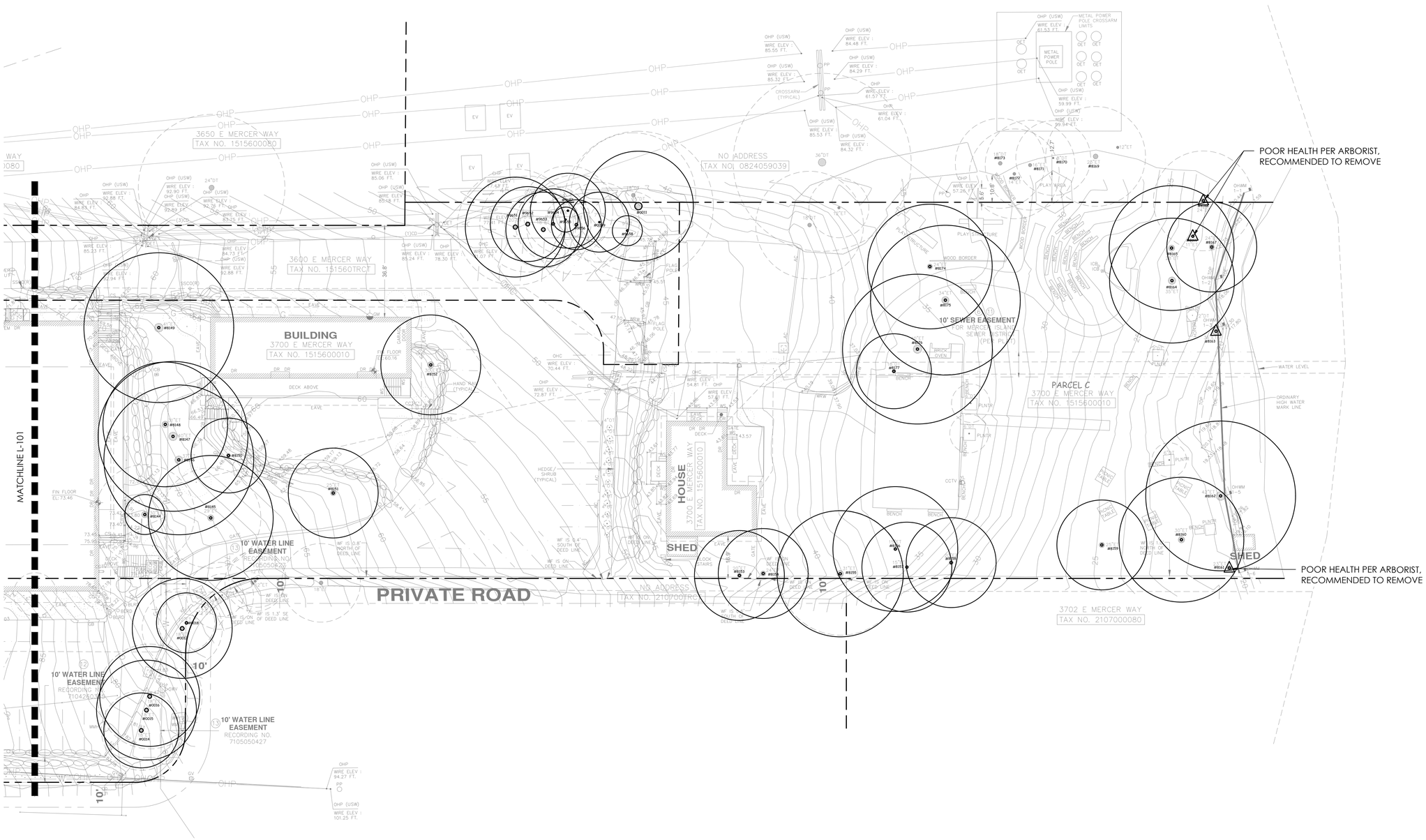
MATCHLINE L-101
3650 E MERCER WAY
TAX NO. 1515600080
3600 E MERCER WAY
TAX NO. 1515601TRCT
NO ADDRESS
TAX NO. 0824059039
BUILDING
3700 E MERCER WAY
TAX NO. 1515600010
HOUSE
3700 E MERCER WAY
TAX NO. 1515600010
SHED
PARCEL C
3700 E MERCER WAY
TAX NO. 1515600010
10' SEWER EASEMENT
FOR MERCER ISLAND
SEWER DISTRICT
(PER 7105050427)
PRIVATE ROAD
NO ADDRESS
TAX NO. 2107000TRCT
3702 E MERCER WAY
TAX NO. 2107000080
10' WATER LINE EASEMENT RECORDING NO. 7105050427
POOR HEALTH PER ARBORIST, RECOMMENDED TO REMOVE
POOR HEALTH PER ARBORIST, RECOMMENDED TO REMOVE
WATER LEVEL
ORDINARY HIGH WATER MARK LINE
METAL POWER POLE
METAL POWER POLE CROSSARM LIMITS
CROSSARM (TYPICAL)
BRICK OVEN
PLAY STRUCTURE
WOOD BORDER
BENCH
PLNTR
CCTV
HEDGE / SHRUB (TYPICAL)
HAND RAIL (TYPICAL)
FLAG POLE
GATE
DECK
DECK ABOVE
FIN. FLOOR EL. 73.46
FIN. FLOOR EL. 60.16
OHP
OHP (USW)
OHWM
#8149
#8148
#8147
#8146
#8145
#8144
#8150
#8151
#8152
#8153
#8154
#8155
#8156
#8157
#8158
#8159
#8160
#8161
#8162
#8163
#8164
#8165
#8166
#8167
#8168
#8169
#8170
#8171
#8172
#8173
#8174
#8175
#8176
#8177
#8178
#8179
#8180
#8181
#8182
#8183
#8184
#8185
#8186
#8187
#8188
#8189

Tree ID Number	Species	Common Name	Diameter (inches)	Avg. Dripline (ft)	Height	Condition	Exceptional Tree Status	Grove
8051 – RETAIN	*Prunus cerasifera*	*Purple leaf plum*	14	12	27	Fair	0	Grove
8052 – RETAIN	*Acer platanoides*	*Norway maple*	13	18	27	Good	0	Grove
8053 – RETAIN	*Fraxius spp*	*Ash spp*	12.2	10	33	Fair	0	Grove
8054 – RETAIN	*Thuja pilcata*	*Western red cedar*	14	12	30	Fair	0	Grove
8055 – RETAIN	*Acer platanoides*	*Norway maple*	12	10	27	Good	0	Grove
8056 – RETAIN	*Acer platanoides*	*Norway maple*	17	18	24	Fair	0	Grove
8057 – RETAIN	*Pseudotsuga menziesii*	*Douglas fir*	22	15	72	Fair	0	Grove
8058	*Pseudotsuga menziesii*	*Douglas fir*	16	15	66	Fair	0	Grove
8059 – RETAIN	*Salix spp*	*Willow spp*	17	8	18	Very Poor	Exceptional	
8060	*Populus trichocarpa*	*Black cottonwood*	15	8	51	Good	0	Grove
8061	*Acer platanoides*	*Norway maple*	15	12	27	Good	0	Grove
8062	*Acer platanoides*	*Norway maple*	17	12	20	Fair	0	Grove
8063	*Salix spp*	*Willow spp*	32	20	70	Fair	Exceptional	Grove
8064	*Thuja pilcata*	*Western red cedar*	36	20	77	Poor	Exceptional	Grove
8065	*Thuja pilcata*	*Western red cedar*	38	20	77	Critical	Exceptional	Grove
8066	*Thuja pilcata*	*Western red cedar*	32	20	70	Very Poor	Exceptional	Grove
8067	*Acer macrophyllum*	*Big leaf maple*	13	5	17	Critical	0	Grove
8068	*Acer macrophyllum*	*Big leaf maple*	25.8	15	55	Very Poor	0	Grove
8069	*Acer macrophyllum*	*Big leaf maple*	28	15	60	Fair	0	Grove
8070	*Thuja pilcata*	*Western red cedar*	22	15	60	Poor	0	Grove
8071	*Thuja pilcata*	*Western red cedar*	24	15	50	Poor	0	Grove
8072	*Thuja pilcata*	*Western red cedar*	12	12	60	Poor	0	Grove
8073	*Acer macrophyllum*	*Big leaf maple*	10	12	55	Fair	0	Grove
8074	*Acer macrophyllum*	*Big leaf maple*	17	25	75	Fair	0	Grove
8075	*Acer macrophyllum*	*Big leaf maple*	11	10	60	Fair	0	Grove
8076	*Acer macrophyllum*	*Big leaf maple*	33.4	25	80	Fair	0	Grove
8077	*Thuja pilcata*	*Western red cedar*	16	0	65	Dead	0	Grove
8078	*Thuja pilcata*	*Western red cedar*	11	8	40	Fair	0	Grove
8079	*Thuja pilcata*	*Western red cedar*	13	10	27	Poor	0	Grove
8080	*Thuja pilcata*	*Western red cedar*	17	10	51	Fair	0	Grove
8081	*Acer macrophyllum*	*Big leaf maple*	32.3	15	69	Fair	0	Grove
8082	*Acer macrophyllum*	*Big leaf maple*	11	25	50	Fair	0	Grove
8083	*Pseudotsuga menziesii*	*Douglas fir*	24	20	60	Fair	0	Grove
8084	*Acer macrophyllum*	*Big leaf maple*	25	35	60	Good	0	Grove
8085	*Acer macrophyllum*	*Big leaf maple*	28.2	35	60	Fair	0	Grove
8086	*Thuja pilcata*	*Western red cedar*	36	20	60	Fair	Exceptional	Grove
8087	*Acer macrophyllum*	*Big leaf maple*	14.7	15	60	Fair	0	Grove
8088	*Acer macrophyllum*	*Big leaf maple*	13	15	50	Fair	0	Grove
8089	*Acer macrophyllum*	*Big leaf maple*	17	25	60	Fair	0	Grove
8090	*Thuja pilcata*	*Western red cedar*	13	12	60	Fair	0	Grove
8091	*Thuja pilcata*	*Western red cedar*	12	12	60	Fair	0	Grove
8092	*Thuja pilcata*	*Western red cedar*	24	20	60	Critical	0	Grove
8093	*Acer macrophyllum*	*Big leaf maple*	24	25	65	Good	0	Grove
8094	*Acer macrophyllum*	*Big leaf maple*	12	20	65	Good	0	Grove
8095	*Pseudotsuga menziesii*	*Douglas fir*	13	15	63	Good	0	Grove
8096	*Thuja pilcata*	*Western red cedar*	26	15	42	Fair	0	Grove
8097 – RETAIN	*Thuja pilcata*	*Western red cedar*	24	15	60	Good	0	Grove
8098	*Acer macrophyllum*	*Big leaf maple*	25	25	60	Poor	0	Grove
8099	*Acer macrophyllum*	*Big leaf maple*	23	20	60	Poor	0	Grove
8100	*Acer macrophyllum*	*Big leaf maple*	14.2	15	60	Fair	0	Grove
8101	*Acer macrophyllum*	*Big leaf maple*	27	25	50	Fair	0	Grove
8102	*Thuja pilcata*	*Western red cedar*	28	25	81	Fair	0	Grove
8103	*Acer macrophyllum*	*Big leaf maple*	19	25	74	Fair	0	Grove
8104	*Acer macrophyllum*	*Big leaf maple*	23	25	80	Good	0	Grove
8105	*Acer macrophyllum*	*Big leaf maple*	21	25	80	Fair	0	Grove
8106	*Acer macrophyllum*	*Big leaf maple*	14.9	15	60	Very Poor	0	Grove
8107	*Acer macrophyllum*	*Big leaf maple*	20	25	65	Fair	0	Grove
8108	*Acer macrophyllum*	*Big leaf maple*	13.5	10	51	Very Poor	0	Grove
8109	*Acer macrophyllum*	*Big leaf maple*	10	20	50	Fair	0	Grove
8110	*Acer macrophyllum*	*Big leaf maple*	10	0	50	Dead	0	Grove
8111	*Acer macrophyllum*	*Big leaf maple*	17	15	66	Good	0	Grove
8112	*Acer macrophyllum*	*Big leaf maple*	11	15	50	Fair	0	Grove
8113	*Acer macrophyllum*	*Big leaf maple*	13	15	50	Poor	0	Grove
8114	*Thuja pilcata*	*Western red cedar*	32	25	80	Critical	Exceptional	Grove
8115	*Acer macrophyllum*	*Big leaf maple*	12	18	42	Fair	0	Grove
8116	*Robinia pseudoacacia*	*Black locust*	14	18	40	Very Poor	0	Grove
8117	*Acer macrophyllum*	*Big leaf maple*	17	20	45	Fair	0	Grove
8118	*Acer macrophyllum*	*Big leaf maple*	12	15	45	Fair	0	Grove
8119	*Thuja pilcata*	*Western red cedar*	38	20	80		Exceptional	Grove
8120	*Acer macrophyllum*	*Big leaf maple*	16	20	46		0	Grove
8121	*Acer macrophyllum*	*Big leaf maple*	18	15	66	Fair	0	Grove
8122	*Fraxius spp*	*Ash spp*	9	7	66	Fair	0	
8123	*Acer macrophyllum*	*Big leaf maple*	14.8	20	60	Fair	0	Grove
8124	*Acer macrophyllum*	*Big leaf maple*	11	12	60	Fair	0	Grove
8125	*Acer macrophyllum*	*Big leaf maple*	18.4	15	66	Fair		Grove
8126	*Acer macrophyllum*	*Big leaf maple*	13		66	Fair	0	Grove
8127	*Acer macrophyllum*	*Big leaf maple*	9		60	Fair	0	N/A
8128	*Thuja pilcata*	*Western red cedar*	38		84	Fair	Exceptional	Grove
8129	*Alnus rubra*	*Red alder*	10	0	55	Critical	0	Grove
8130	*Acer macrophyllum*	*Big leaf maple*	13	10		Fair	0	Grove
8131	*Thuja pilcata*	*Western red cedar*	25	15		Fair	0	Grove
8132	*Acer macrophyllum*	*Big leaf maple*		25	54	Fair	0	Grove
8133	*Thuja pilcata*	*Western red cedar*	14	20	54	Fair	0	Grove
8134	*Thuja pilcata*	*Western red cedar*	13.6		50		0	Grove
8135	*Pseudotsuga menziesii*	*Douglas fir*	10		45	Fair	0	Grove
8136	*Acer macrophyllum*	*Big leaf maple*	25	20	80	Fair	0	Grove
8137	*Acer macrophyllum*	*Big leaf maple*	10	18	65	Very Poor	0	Grove
8138	*Acer macrophyllum*	*Big leaf maple*	25	20	70	Very Poor	0	Grove
8139	*Acer macrophyllum*	*Big leaf maple*	10.8	15	33	Fair	0	Grove
8140	*Acer macrophyllum*	*Big leaf maple*	24	25	54	Fair	0	Grove
8141	*Acer macrophyllum*	*Big leaf maple*	29.7		54	Very Poor	0	Grove
8142 – RETAIN	*Callitropsis nootkatensis*	*Yellow cedar*	11		39	Fair	Not Specific	
8143 – RETAIN	*Acer circinatum*	*Vine maple*	7.5	8	39	Fair	Not Specific	
8144 – RETAIN	*Thuja pilcata*	*Western red cedar*			20	81	Good	Exceptional
8145 – RETAIN	*Thuja pilcata*	*Western red cedar*	29	25	84	Good	Not Specific	
8146 – RETAIN	*Thuja pilcata*	*Western red cedar*	37	30	93	Fair	Exceptional	
8147 – RETAIN		*Western red cedar*	40	30	93	Fair	Exceptional	
8148 – RETAIN	*Thuja pilcata*		31	25	90	Good	Exceptional	
8149 – RETAIN	*Chamaecyparis lawsoniana*	*Lawsons cypress*	41	30	95	Fair	Exceptional	
8150 – RETAIN	*Thuja pilcata*	*Western red cedar*	20	15	78	Fair	Not Specific	
8151 – RETAIN	*Pseudotsuga menziesii*	*Douglas fir*	25	18	84	Good	Not Specific	
8152 – RETAIN	*Thuja pilcata*	*Western red cedar*	30.1	20	60	Fair	Not Specific	
8153 – RETAIN	*Pseudotsuga menziesii*	*Douglas fir*	20	18	80	Good	Not Specific	
8154 – RETAIN	*Pseudotsuga menziesii*	*Douglas fir*	24	18	81	Good	Not Specific	
8155 – RETAIN	*Thuja pilcata*	*Western red cedar*	31	25	85	Fair	Exceptional	
8156 – RETAIN	*Pseudotsuga menziesii*	*Douglas fir*	15	25	80	Good	Not Specific	
8157 – RETAIN	*Pseudotsuga menziesii*	*Douglas fir*	15	18	80	Fair	Not Specific	
8158 – RETAIN	*Pseudotsuga menziesii*	*Douglas fir*	20	18	78	Fair	Not Specific	
8159 – RETAIN	*Fraxius spp*	*Ash spp*	25	18	42	Fair	Exceptional	
8160 – RETAIN	*Pseudotsuga menziesii*	*Douglas fir*	30	25	93	Critical	Exceptional	
8161	*Fraxius spp*	*Ash spp*	22.9	0	45	Critical	Not Specific	N/A
8162 – RETAIN	*Pseudotsuga menziesii*	*Douglas fir*	42	30	78	Good	Exceptional	
8163	*Pseudotsuga menziesii*	*Douglas fir*	36	0	99	Critical	Exceptional	
8164 – RETAIN	*Pseudotsuga menziesii*	*Douglas fir*	35	25	94	Fair	Exceptional	
8165 – RETAIN	*Pseudotsuga menziesii*	*Douglas fir*	28	25	114	Fair	Not Specific	
8166	*Pseudotsuga menziesii*	*Douglas fir*	11	0	68	Dead	Not Specific	N/A
8167 – RETAIN	*Pseudotsuga menziesii*	*Douglas fir*	24	18	129	Very Poor	Not Specific	
8168 – RETAIN	*Fraxius spp*	*Ash spp*	24	20	75	Very Poor	Not Specific	
8169 – RETAIN	*Cedrus deodara*	*Deodar cedar*	23	20	78	Good	Not Specific	
8170 – RETAIN	*Acer saccharum*	*Sugar maple*	9	15	24	Good	Not Specific	
8171 – RETAIN	*Cedrus deodara*	*Deodar cedar*	16	18	78	Good	Not Specific	
8172 – RETAIN	*Cedrus deodara*	*Deodar cedar*	14	18	42	Good	Not Specific	
8173 – RETAIN	*Acer macrophyllum*	*Big leaf maple*	18	18	42	Poor	Not Specific	
8174 – RETAIN	*Pseudotsuga menziesii*	*Douglas fir*	24	25	57	Fair	Not Specific	
8175 – RETAIN	*Pseudotsuga menziesii*	*Douglas fir*	34	30	83	Fair	Exceptional	
8176 – RETAIN	*Pseudotsuga menziesii*	*Douglas fir*	41	30	90	Fair	Exceptional	
8177 – RETAIN	*Prunus spp*	*Cherry*	18.2	15	24	Fair	Not Specific	
8178 – RETAIN	*Prunus spp*	*Cherry*	12	8	18	Fair	Not Specific	
8179 – RETAIN	*Prunus spp*	*Cherry*	20	8	20	Fair	Not Specific	
8180 – RETAIN	*Callitropsis nootkatensis*	*Yellow cedar*	14.8	12	49	Fair	Not Specific	

Tree ID Number	Species	Common Name	Diameter (inches)	Avg. Dripline (ft)	Height	Condition	Exceptional Tree Status	Grove
8181 – RETAIN	*Callitropsis nootkatensis*	*Yellow cedar*	19.2	15	48	Fair	Not Specific	
8182 – RETAIN	*Crataegus monogyna*	*English Hawthorn*	9.1	8	21	Fair	Not Specific	
8183	*Prunus spp*	*Cherry*	12.7	8	18	Fair	Not Specific	N/A
8184	*Prunus spp*	*Cherry*	17.5	10	20	Fair	Not Specific	N/A
0009 - RETAIN	*Pseudotsuga menziesii*	*Douglas fir*	7	12	40	Good	0	N/A
0011 - RETAIN	*Populus trichocarpa*	*Black cottonwood*	35	22	60	Fair	0	N/A
0014 - RETAIN	*Thuja pilcata*	*Western red cedar*	18	15	60	Good	0	N/A
0015 - RETAIN	*Thuja pilcata*	*Western red cedar*	18	20	60	Fair	0	N/A
0016 - RETAIN	*Pseudotsuga menziesii*	*Douglas fir*	18	20	60	Good	0	N/A
0017 - RETAIN	*Pseudotsuga menziesii*	*Douglas fir*	18	20	60	Good	0	N/A
0018 - RETAIN	*Thuja pilcata*	*Western red cedar*	12	12	50	Fair	0	N/A
9651 - RETAIN	*Pseudotsuga menziesii*	*Douglas fir*	20	17	70	Fair	0	N/A
9652 - RETAIN	*Pseudotsuga menziesii*	*Douglas fir*	18	15	70	Fair	0	N/A
9653 - RETAIN	*Pseudotsuga menziesii*	*Douglas fir*	18	15	70	Fair	0	N/A
9654 - RETAIN	*Pseudotsuga menziesii*	*Douglas fir*	12	14	60	Fair	0	N/A
9655 - RETAIN	*Thuja pilcata*	*Western red cedar*	6	5	25	Good	0	N/A
9656 - RETAIN	*Salix scouleriana*	*Souler's Willow*	13	10	25	Poor	0	N/A
9657 - RETAIN	*Pseudotsuga menziesii*	*Douglas fir*	7	15	60	Fair	0	N/A
9658 - RETAIN	*Pseudotsuga menziesii*	*Douglas fir*	9	6	40	Good	0	N/A

NOT UPDATED

TREE PROTECTION AREA (TPZ)

KEEP OUT!

DO NOT REMOVE OR ADJUST THE APPROVED LOCATION OF THIS TREE PROTECTION AREA

Trees enclosed by this fence are protected and are subject to the conditions of the tree permit. Violation of tree conditions may lead to:

1. Correction Notices or Stop Work Orders until compliance is achieved
2. RE Inspection Fees/financial penalties
3. [illegible] reports recommending mitigation

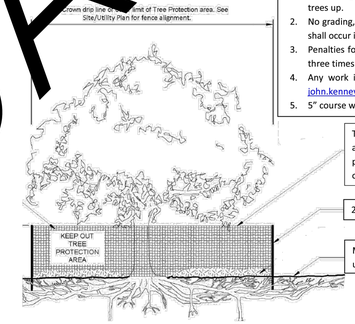

Notes

1. No pruning shall be performed unless under the direction of the Project Arborist. Including limbing trees up.
2. No grading, excavation, storage (materials, equipment, vehicles, etc.), or other unpermitted activity shall occur inside the protective fencing.
3. Penalties for damaging by root damage/compaction or removing a saved tree may be a fine up to three times the value of the tree plus restoration (MICC 19.10.160).
4. Any work in approved TPZ must be with the permission of the City Arborist (206) 275-7713, john.kenney@mercergov.org.
5. 5" course woodchips within the tree protection zone, but not against the tree trunk.

Tree protection fence: 6' **chain link** fence, solidly anchored into the ground, or if authorized High-density polyethylene fencing with 3.5" x 1.5" openings; color orange. Steel posts installed at 8' o.c.

2" x 6" steel posts or approved equal

Maintain existing grade with the tree protection fence unless otherwise indication on the plans

Any Work in the protected area must be with the permission of the City Arborist john.kenney@mercergov.org

1 TREE PROTECTION DETAIL
SCALE: 3/8" = 1' - 0"

Karen Kiest
Landscape Architects
111 west john street suite 306
seattle washington 98119
tel 206 323 6032

STATE OF WASHINGTON
KAREN S. KIEST
21644
REGISTERED LANDSCAPE ARCHITECT
3700 E MERCER WAY
BARNABIE POINT K-8

NO.	DATE	DESCRIPTION
2	01/06/2026	BLDG PERMIT CORRS
1	10/22/2025	BLDG PERMIT CORRS

4 JUNE 2025
BUILDING PERMIT

PROJECT: HNTS

TREE INVENTORY & PROTECTION

L-103

© ANJALI GRANT DESIGN LLC ORIGINAL SHEET SIZE: 24" X 36"

CITY OF MERCER ISLAND

COMMUNITY PLANNING & DEVELOPMENT
9611 SE 36TH STREET | MERCER ISLAND, WA 98040
PHONE: 206.275.7605 | www.mercergov.org

MERCER ISLAND TREE INVENTORY & REPLACEMENT SUBMITTAL INFORMATION

PROJECT INFORMATION	
Property Owner Name:	Herzl-Ner Tamid
Site Address or Parcel Number:	3700 East Mercer Way
Project Contact Name:	Dana Warren
Contact Email Address:	Dana Warren
Contact Phone Number:	206-226-3100

EXCEPTIONAL TREES

** *Exceptional Trees- means a tree or group of trees that because of its unique historical, ecological or aesthetic value constitutes an important community resource. A tree that is rare or exceptional by virtue of its size, species, condition, cultural/historical importance, age, and/or contribution as part of a tree grove. Trees with a diameter of more than 36 inches, or with a diameter that is equal to or greater than the diameter listed in the Exceptional Tree Table* shown in MICC 19.16 under Tree, Exceptional.

List the total number of trees for each category and the tree identification numbers from the arborist report.

Number of trees 36" or greater: 11
List tree numbers:

Number of trees 24" or greater (including 36" or greater): 51
List tree numbers:

Number of trees from Exceptional Tree Table (MICC 19.16): 23
List tree numbers:

LARGE REGULATED TREES

\\chfs1\share\CPD\FORMS\1Current Forms\Engineering Forms\Tree\MercerIslandTreeInventory.docx 02/2022

** *Large Regulated Trees- means any tree with a diameter of 10 inches or more and any tree that meets the definition of an Exceptional Tree.*

Number of Large Regulated Trees on site: 137 (A)
List tree numbers:

Number of Large Regulated Trees on site proposed for removal: 83 (B)
List tree numbers:

Percentage of trees to be retained ((A-B)/Ax100) must be at least 30%: 39 %

RIGHT OF WAY TREES

Right of Way Trees- means a tree that is located in the street right of way adjacent to the project property.

Number of Large Regulated Trees in right of way:
List tree numbers:

Number of Large Regulated Trees in right of way proposed for removal:
List tree numbers:

Reason for removal:

TREE REPLACEMENT

** Tree replacement- removed trees must be replaced based on the ratio in the table below. Replacement trees shall be conifers at least six feet tall and or deciduous at least one and one-half inches in diameter at base.

Diameter of Removed Tree (measured 4.5' above ground)	Tree replacement Ratio	Number of Trees Proposed for Removal	Number of Tree Required for Replacement Based on Size/Type
Less than 10"*	1		
10" up to 24"	2		
Greater than 24" up to 36"	3		
Greater than 36" and any Exceptional Tree	6		
	TOTAL TREE REPLACEMENTS		

no replacement tree is needed if the tree fits all of the following;
Less than 10 inches in diameter, not an exceptional tree, and not a replacement tree from another tree permit. *

NOT UPDATED

TREE REPLACEMENT CALCULATION NOTES

** GROVE DETERMINATION NOT INCLUDED IN TREE REPLACEMENT CALCULATIONS.

1. PER MICC 19.10.060 - TREE REMOVAL, IN THE B ZONING DESIGNATION, A TREE PERMIT IS REQUIRED AND WILL BE GRANTED IF IT MEETS ANY OF THE FOLLOWING CRITERIA:
   A. IT IS NECESSARY FOR PUBLIC SAFELY, REMOVAL OF HAZARDOUS TREES OR REMOVAL OF DISEASED OR DEAD TREES
2. PER MICC 19.10.070 - TREE REPLACEMENT, REPLACEMENT IS REQUIRED FOR ANY TREES THAT ARE REMOVED, ACCORDING TO REPLACEMENT RATIOS IN THIS SECTION. AT LEAST HALF OF THE TREES NEED TO BE PACIFIC NORTHWEST NATIVES. PER CUP24-001 REVIEW LETTER: REPLACEMENT TREES NEED TO BE AT LEAST 10' APART FROM EACH OTHER, STRUCTURES, FENCES AND UTILITIES.
3. THE CITY ARBORIST MAY REDUCE THE NUMBER OF REPLACEMENT TREES AS FOLLOWS, WHERE OTHER MEASURES DESIGNED TO MITIGATE THE TREE LOSS BY RESTORING THE TREE CANOPY COVERAGE AND ITS ASSOCIATED BENEFITS ARE CONSIDERED TO BE EFFECTIVE AND CONSISTENT WITH THE PURPOSES OF THIS CHAPTER. THE CITY ARBORIST MAY CONSIDER:
   A. REPLACEMENT OF HAZARDOUS, UNDESIRED, OR SHORT-LIVED TREES WITH HEALTHY NEW TREES THAT HAVE A GREATER CHANCE OF LONG-TERM SURVIVAL.
4. IF REQUESTED AND PROJECT CAN SHOW NO ROOM EXISTS ON SITE FOR REPLACEMENTS, THE REMAINDER CAN BE FEE IN LIEU IF REQUESTED.

TREE INVENTORY AND REPLACEMENT NOTES

1. ARBOR INFORMATION PER ARBORIST REPORT BY DAVEY TREE RESOURCE GROUP, INC., DATED SEPTEMBER 29, 2023 AND IDENTIFICATION OF ADDITIONAL TREES, DATED JULY 3, 2025. CONTACT: IAN SCOTT
2. FOR TREE NUMBERS IDENTIFIED ON PLANS, SEE SHEETS L-101 AND L-102
3. TREES TO BE REMOVED DETERMINED BY ARCHITECTURAL AND LANDSCAPE PLANS, AND ARBORIST NOTES ON CONDITION.
4. NO WORK SHOWN IN RIGHT OF WAY
5. PER CITY OF MERCER ISLAND COMMUNITY PLANNING AND DEVELOPMENT, REPLACEMENT TREES SHALL BE CONIFERS AT LEAST SIX FEET TALL AND OR DECIDUOUS AT LEAST ONE AND ONE-HALF INCHES IN DIAMETER AT BASE.
7. TREE REPLACEMENTS TO BE FURTHER REVIEWED WITH THE CITY.
8. INSTALL MINIMUM (1) WATER BAG PER TREE. REPLACEMENT TREES SHALL BE MAINTAINED FOR FIVE YEARS AFTER PLANTING.
9. (**28**) REPLACEMENT TREES SHOWN ON PLANTING PLANS. SEE ARBORIST LETTER ADDRESSING THE NUMBER OF REPLACEMENT TREES PER 19.10.070 B.4.

Karen Kiest
Landscape Architects
111 west john street suite 306
seattle washington 98119
tel 206 323 6032

STATE OF WASHINGTON
KAREN S. KIEST
LICENSED LANDSCAPE ARCHITECT
No. 655 EXP. 07/10/2027

3700 E MERCER WAY
BARNABIE POINT K-8

NO.	DATE	DESCRIPTION
2	01/06/2026	BLDG PERMIT CORRS
1	10/22/2025	BLDG PERMIT CORRS

4 JUNE 2025
BUILDING PERMIT

PROJECT: HNTS

TREE REPLACEMENT

L-104

© ANJALI GRANT DESIGN LLC ORIGINAL SHEET SIZE: 24" X 36"

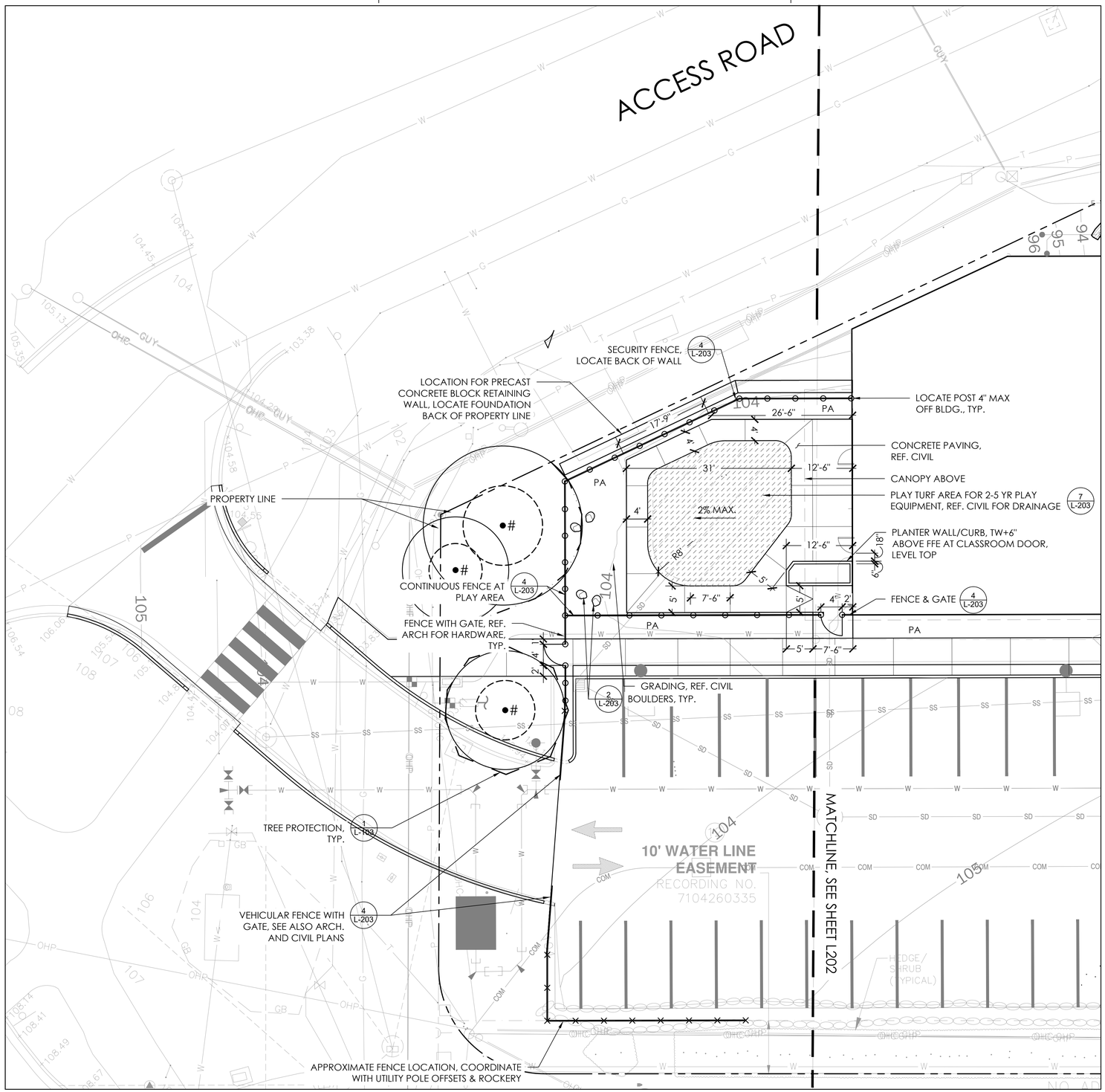

1 Landscape Materials & Layout
scale 1" = 10' - 0"

0 10 20

MATERIALS LIST

CONCRETE PAVING
PEDESTRIAN C.I.P. CONC. PAVING
BROOM FINISH, SAND-COATED EXP. JOINTS, SAWCUT JOINTS, REF ALSO CIVIL

1 L-103 — TREE PROTECTION
EXISTING TREE TO REMAIN WITH TREE PROTECTION FENCING, SEE ALSO ARBORIST'S NOTES

8 L-203 — LOGS
8'-12' MIN. LOGS, SET PARTIALLY INTO GROUND

3 L-203 — BIKE RACK
TOFINO NO SCRATCH SURFACE MOUNT RACK, BY SPORTWORKS, INSTALL PER MFG. RECOMMENDATIONS

8 L-203 — STONE SEAT
6'L X 2'W X 18" HT @ FIN GR., REF. DET.

FENCING
REF. ARCH & CIVIL FOR ADDL. INFORMATION

1,2 L-204 — WEST PLAY AREA
6' HT., METAL PICKETS W/ SECURITY HARDWARE

AUTO ENTRY FENCE & GATE
6' HT., METAL PICKETS W/ SECURITY HARDWARE

2 L-203 — BOULDERS
REF. SPEC

SITE: 36"X36"
PLAY AREA: 24"X24"

PLAY EQUIPMENT & FOOTINGS
FOR AGES 2-5, NOT SHOWN, BY OWNER, REF. SPEC

PA — PLANTING AREA

SITE LIGHTING
REF. ELECTRICAL

PRECAST CONCRETE BLOCK WALL
BY REDI-ROCK, AVAILABLE FROM PUGET SOUND PRECAST, 714-496-9565, OR APPROVED EQUAL

FOR FENCE POST FOOTINGS AT BLOCK WALL, INSTALL SLEEVE-IT BY STRATA SYSTEMS, 800-680-7750

REFERENCE NOTES SCHEDULE

SYMBOL	DESCRIPTION
7 L-203	SYNTHETIC TURF SAFETY SURFACING, PER SPEC

Karen Kiest
Landscape Architects
111 west john street suite 306
seattle washington 98119
tel 206 323 6032

STATE OF WASHINGTON · KAREN S. KIEST · 22650 · REGISTERED LANDSCAPE ARCHITECT · EXP. 01/10/2027

3700 E MERCER WAY
BARNABIE POINT K-8

NO.	DATE	DESCRIPTION
2	01/06/2026	BLDG PERMIT CORRS
1	10/22/2025	BLDG PERMIT CORRS

4 JUNE 2025
BUILDING PERMIT

PROJECT: HNTS

LANDSCAPE MATERIALS & LAYOUT

L-201

© ANJALI GRANT DESIGN LLC ORIGINAL SHEET SIZE: 24" X 36"

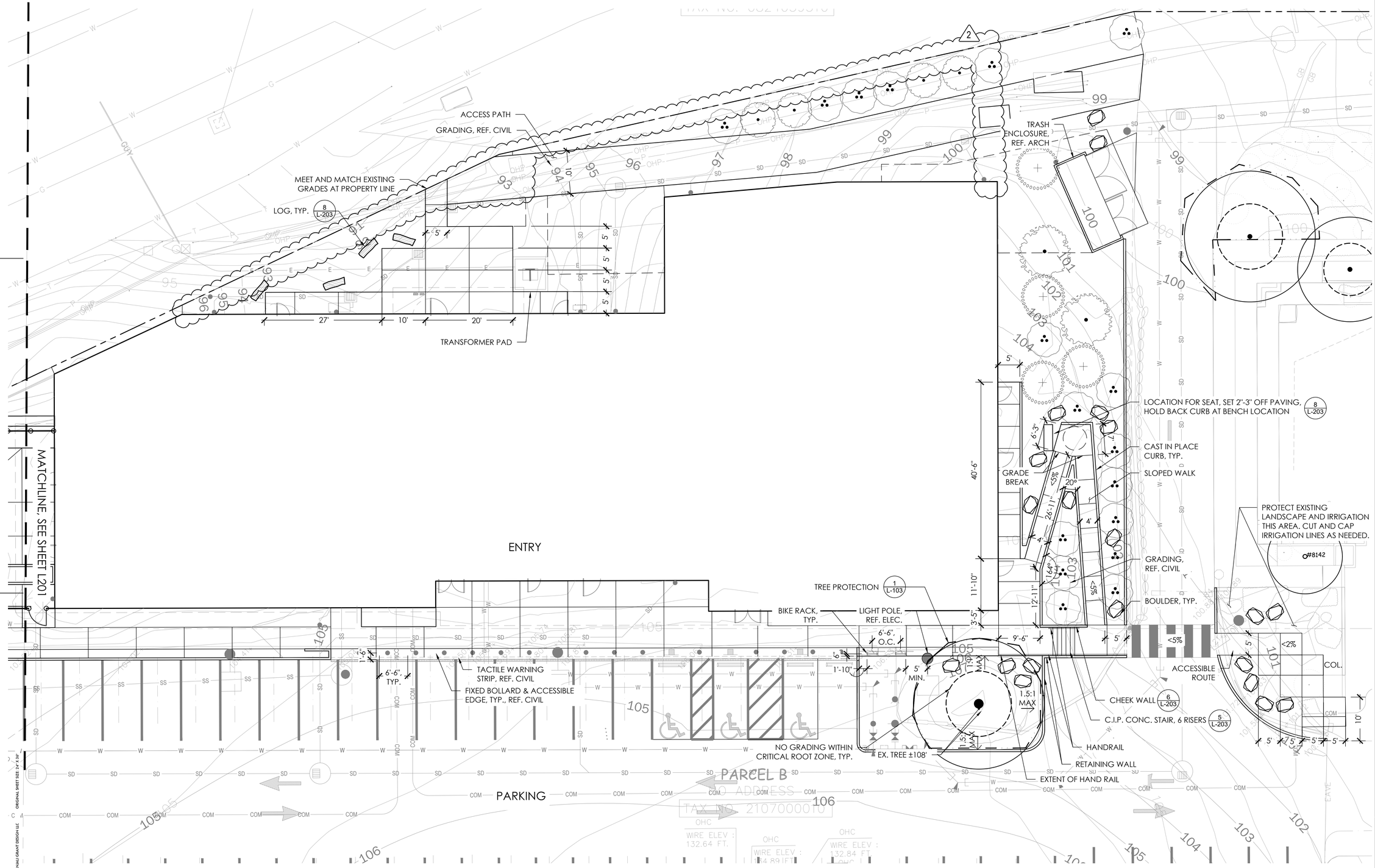

1 Landscape Layout & Materials
scale 1" = 10' - 0"

0 10 20

Karen Kiest
Landscape Architects
111 west john street suite 306
seattle washington 98119
tel 206 323 6032

STATE OF WASHINGTON KAREN S. KIEST NO. 850 EXP. 12/10/2007 LICENSED LANDSCAPE ARCHITECT

3700 E MERCER WAY
BARNABIE POINT K-8

NO.	DATE	DESCRIPTION
2	01/06/2026	BLDG PERMIT CORRS
1	10/22/2025	BLDG PERMIT CORRS

4 JUNE 2025
BUILDING PERMIT

PROJECT: HNTS

LANDSCAPE MATERIALS & LAYOUT

L-202

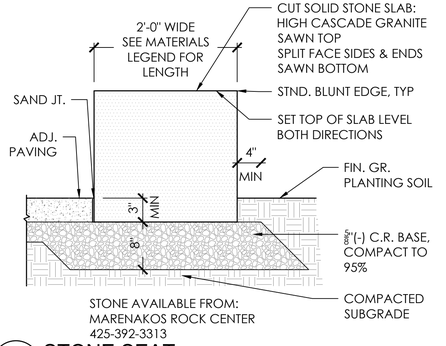

8 STONE SEAT
SCALE: 1" = 1'–0"

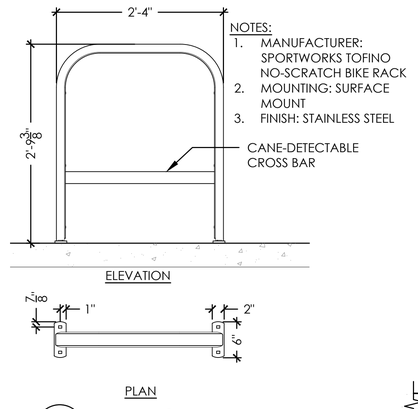

3 BIKE RACK
SCALE: 1" = 1' - 0"

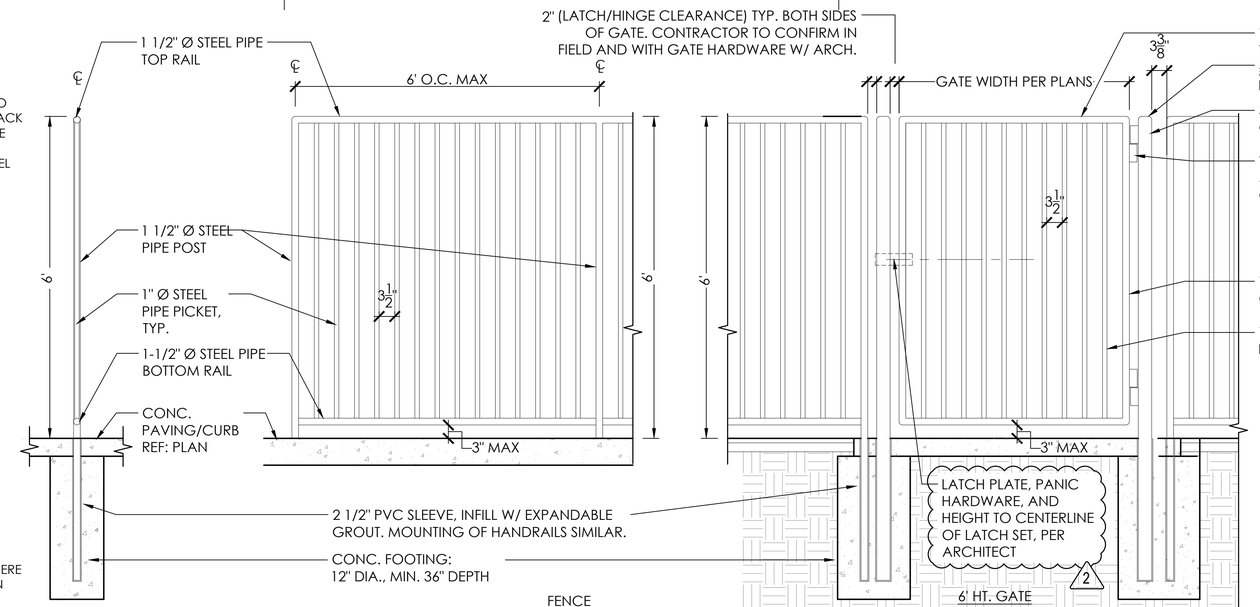

4 METAL PICKET FENCE & GATES
SCALE: 3/4" = 1'=0"

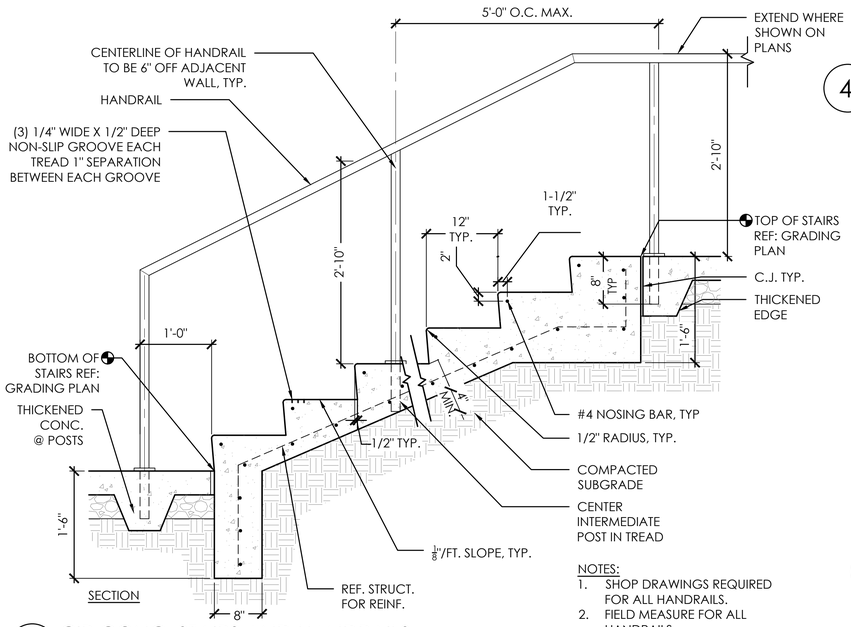

NOTES:
1. SHOP DRAWINGS REQUIRED FOR ALL HANDRAILS.
2. FIELD MEASURE FOR ALL HANDRAILS.

5 CIP CONC. STAIRS AND HANDRAILS
SCALE: 1" = 1'–0"

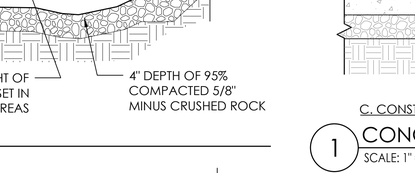

NOTE:
PLACE ALL LOGS PRIOR TO TOPSOIL PLACEMENT, IRRIGATION, OR LANDSCAPING

8 LOG
SCALE: 1 1/2" = 1'–0"

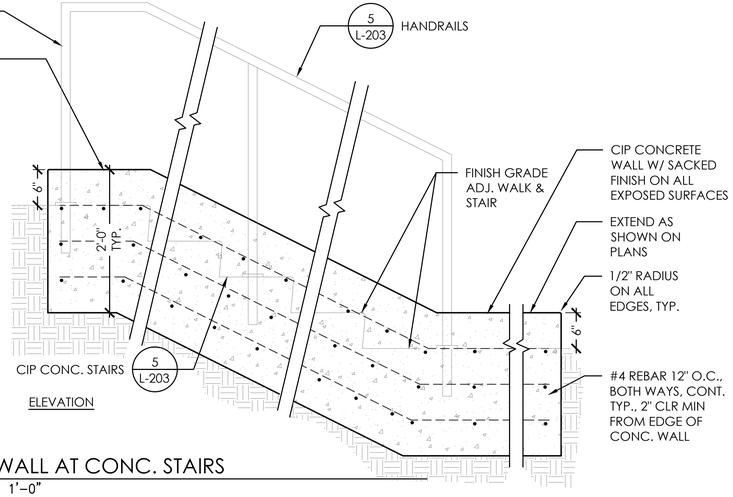

6 CHEEK WALL AT CONC. STAIRS
SCALE: 1" = 1'–0"

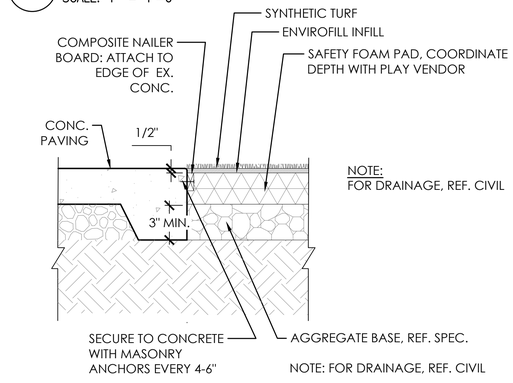

NOTE:
FOR DRAINAGE, REF. CIVIL

7 SYNTHETIC TURF SURFACING
SCALE: 1 1/2" = 1'–0"

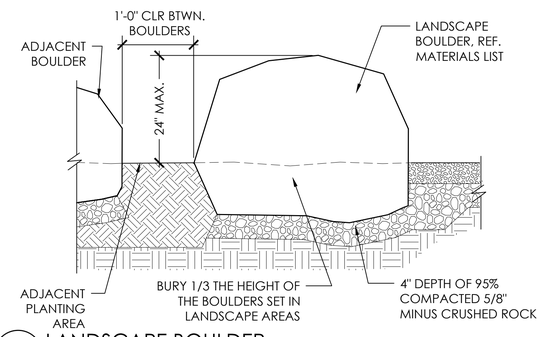

NOTES:
1. BOULDER PLACEMENT TO BE REVIEWED AND APPROVED BY LANDSCAPE ARCHITECT.
2. PLACE ALL BOULDERS PRIOR TO PAVING, TOPSOIL PLACEMENT, IRRIGATION, OR LANDSCAPING.

2 LANDSCAPE BOULDER
SCALE: 1" = 1'-0"

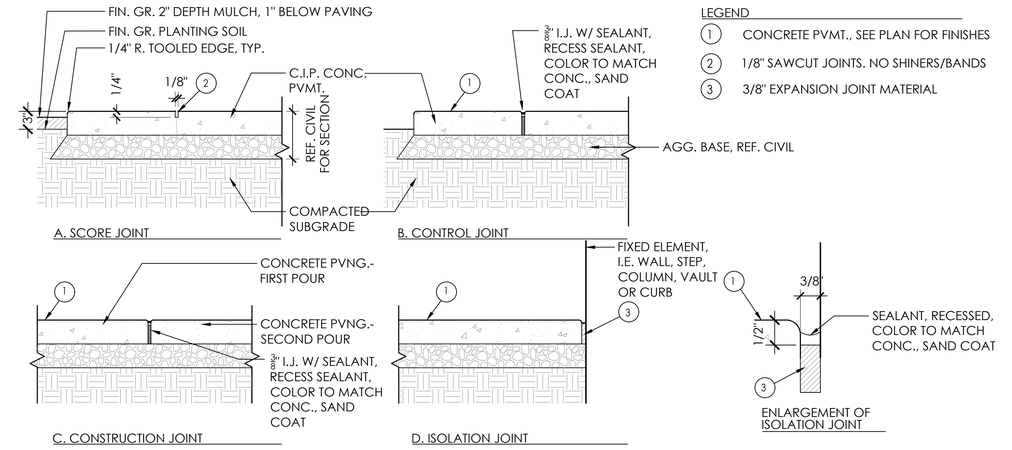

1 CONCRETE PAVEMENT JOINTS
SCALE: 1" = 1'-0"

Karen Kiest
Landscape Architects
111 west john street suite 306
seattle washington 98119
tel 206 323 6032

STATE OF WASHINGTON
KAREN S. KIEST
21684
REGISTERED LANDSCAPE ARCHITECT

3700 E MERCER WAY
BARNABIE POINT K-8

NO.	DATE	DESCRIPTION
2	01/06/2026	BLDG PERMIT CORRS
1	10/22/2025	BLDG PERMIT CORRS

4 JUNE 2025
BUILDING PERMIT

PROJECT: HNTS

HARDSCAPE & MATERIALS DETAILS

L-203

© ANJALI GRANT DESIGN LLC ORIGINAL SHEET SIZE 24" X 36"

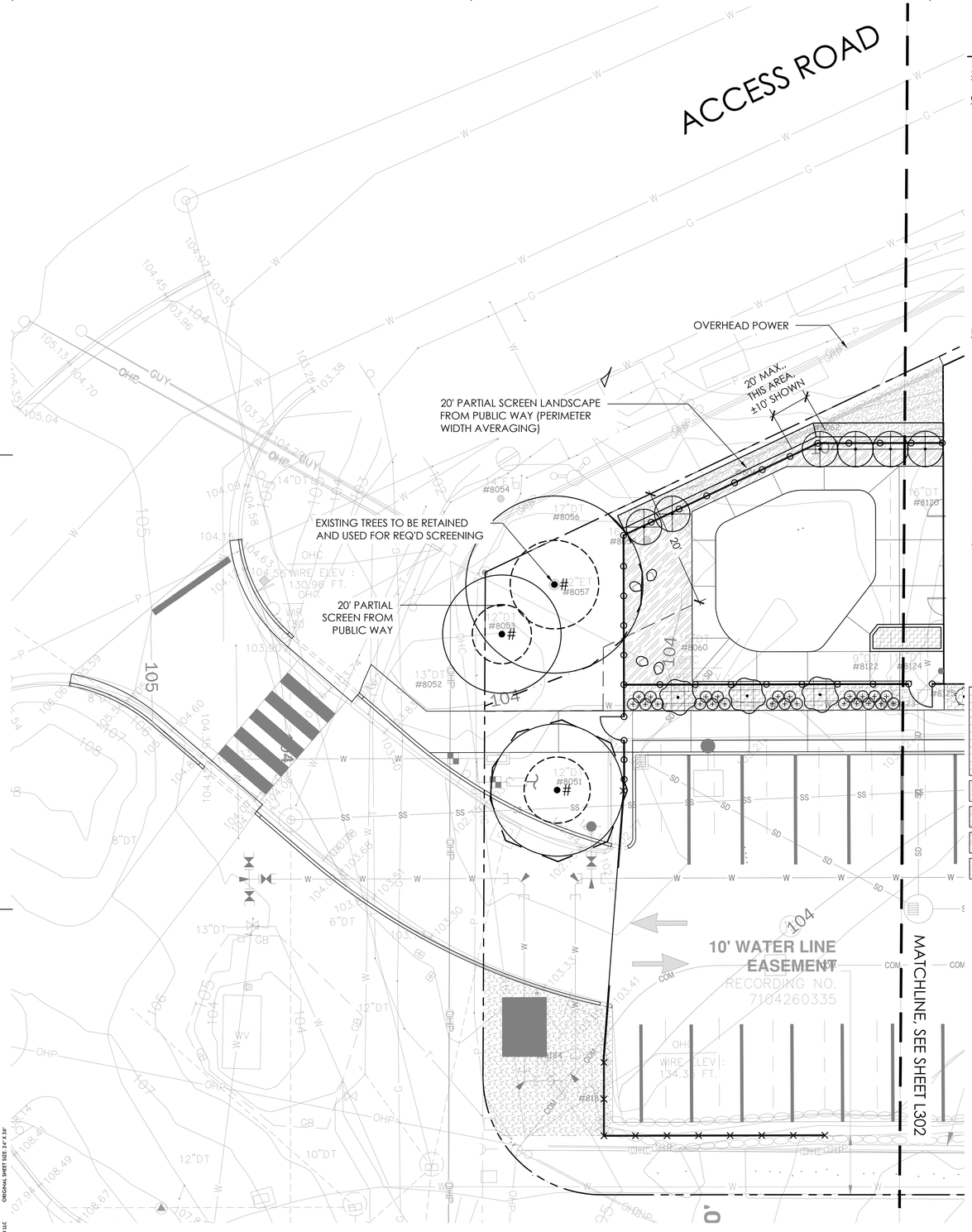

1 Planting Plan
scale 1" = 10' - 0"

0 10 20

PLANT SCHEDULE

SYMBOL	BOTANICAL NAME	COMMON NAME	SIZE	COND	DROUGHT	SPACING
CONIFERS						
	PINUS CONTORTA	SHORE PINE	6` HT.	B&B	NATIVE	
	PSEUDOTSUGA MENZIESII	DOUGLAS FIR	6` HT.	B&B	NATIVE	
	THUJA PLICATA	WESTERN RED CEDAR	6` HT.	B&B	NATIVE	
DECIDUOUS TREES						
	ACER CIRCINATUM MULTI-STEM, MIN. 3 STEMS	VINE MAPLE	1-1/2" AT BASE	B&B	NATIVE	
	RHAMNUS PURSHIANA	CASCARA	1-1/2" AT BASE	B&B	NATIVE	
SHRUBS						
	CORNUS SERICEA 'KELSEYI'	KELSEY'S DWARF RED TWIG DOGWOOD	1 GAL.	CONT.		24" o.c.
	VACCINIUM OVATUM	EVERGREEN HUCKLEBERRY	5 GAL.	CONT.	NATIVE	36" o.c.
LARGE SHRUBS						
	MYRICA CALIFORNICA	PACIFIC WAX MYRTLE	5 GAL.	CONT.	NATIVE	72" o.c.
	OEMLERIA CERASIFORMIS	OSOBERRY	5 GAL.	CONT.	NATIVE	72" o.c.
	RHODODENDRON MACROPHYLLUM	PACIFIC RHODODENDRON	5 GAL.	CONT.	NATIVE	72" o.c.
GROUND COVERS						
	NATIVE GROUNDCOVER					
	ARCTOSTAPHYLOS UVA-URSI	KINNIKINNICK	1 GAL.	CONT.	NATIVE	20% @ 24" o.c.
	GAULTHERIA SHALLON	SALAL	1 GAL.	CONT.	NATIVE	20% @ 24" o.c.
	MAHONIA NERVOSA	OREGON GRAPE	1 GAL.	CONT.	NATIVE	20% @ 24" o.c.
	MAHONIA REPENS	CREEPING MAHONIA	1 GAL.	CONT.	NATIVE	20% @ 24" o.c.
	POLYSTICHUM MUNITUM	WESTERN SWORD FERN	1 GAL.	CONT.	NATIVE	20% @ 24" o.c.
	UNIRRIGATED HYDROSEED, PER SPEC					
	ARBORIST WOOD CHIP MULCH, PER SPEC					
	ENGINEERED WOOD FIBER SURFACING, PER SPEC.					
	DRAIN ROCK, 5/8", 4" DEPTH					

LANDSCAPE CODE NOTES

PER MICC 19.12.040 - LANDSCAPE DESIGN AND OUTDOOR SPACES, THE FOLLOWING INFORMATION:

1. PERIMETER LANDSCAPE SCREENS: WHERE EXISTING UNDERGROWTH WILL BE RETAINED, THE SHRUB AND GROUNDCOVER REQUIREMENTS FOR ALL SCREEN TYPES MAY BE ADJUSTED, PROVIDED THE OBJECTIVES OF THIS SECTION ARE MET.

2. **FULL SCREEN**: PROVIDE A DENSE VEGETATED SEPARATION BETWEEN DISSIMILAR USES ON ADJACENT PROPERTIES. A FULL SCREEN SHOULD BLOCK VIEWS FROM ADJACENT PROPERTIES AS SEEN AT THE PEDESTRIAN EYE LEVEL IN ALL SEASONS WITHIN THREE YEARS OF INSTALLATION. THE NUMBER OF TREES PROVIDED SHALL BE PROPORTIONAL TO **ONE TREE FOR EVERY TEN FEET OF LANDSCAPE PERIMETER LENGTH**.

3. **PARTIAL SCREEN**: PROVIDE A MODERATE VEGETATED SEPARATION BETWEEN USES ON ADJACENT PROPERTIES AND INTERMITTENT VIEWS TO ADJACENT PROPERTIES. A PARTIAL SCREEN SHALL PROVIDE THE DESIRED SCREENING FUNCTION AS SEEN AT THE PEDESTRIAN EYE LEVEL IN ALL SEASONS WITHIN THREE YEARS OF INSTALLATION. THE NUMBER OF TREES PROVIDED SHALL BE PROPORTIONATE TO **ONE TREE FOR EVERY 20 FEET OF LANDSCAPE PERIMETER LENGTH**.

4. THE FOLLOWING PLANTING TYPES SHOULD BE USED: NATIVE OR NORTHWEST-ADAPTED PLANTS SHOULD BE USED FOR ALL OPEN SPACE AND BUFFER LOCATIONS AND DROUGHT TOLERANT PLANTINGS SHOULD BE USED IN A MAJORITY OF PLANTINGS.

5. GROUNDCOVER SHOULD BE USED TO ENSURE PLANTING AREAS ARE ATTRACTIVE, MINIMIZE MAINTENANCE AND THE POTENTIAL FOR ENCROACHMENT OF INVASIVE PLANT MATERIAL. GROUNDCOVER SHOULD BE PLANTED AND SPACED TO ACHIEVE TOTAL COVERAGE WITHIN THREE YEARS AFTER INSTALLATION.

TREE NOTES

1. PROVIDE TREE PROTECTION FOR TREES SHOWN TO REMAIN. SEE DETAIL L-103, SEE ALSO ARBORIST'S REPORT.

2. FOR REPLACEMENT TREE REQUIREMENTS, SEE SHEET L-103 TREE INVENTORY AND REPLACEMENT. REFER TO TREE REPLACEMENT CALCULATIONS FOR REQUIRED QUANTITIES.

3. ASSUME MIN. ONE WATER BAG PER TREE.

PLANTING NOTES

1. PROVIDE 1-YEAR MAINTENANCE AND WATER FOR HEALTHY ESTABLISHMENT OF ALL PLANTINGS.

2. ALL AREAS WITHIN LIMIT OF DISTURBANCE SHALL BE RESTORED.

3. PROVIDE GROUND COVERS IN ALL SHRUB PLANTING AREAS. GROUND COVERS SHALL BE SPACED USING TRIANGULAR PATTERN, TO PROVIDE TOTAL COVERAGE OF LANDSCAPE AREA IN THREE YEARS.

4. ADJUST TREE LOCATIONS AS NECESSARY TO BE 8 FEET CLEAR FROM CENTER LINES OF UNDERGROUND UTILITIES. SEE REPLACEMENT TREE NOTES FOR ADDITIONAL REQUIREMENTS.

5. ADJUST TREE LOCATIONS AS NECESSARY TO BE 5 FEET CLEAR MINIMUM FROM FENCING. SEE REPLACEMENT TREE NOTES FOR ADDITIONAL REQUIREMENTS.

Karen Kiest
Landscape Architects
111 west john street suite 306
seattle washington 98119
tel 206 323 6032

STATE OF WASHINGTON · KAREN S. KIEST · 21660 · REGISTERED LANDSCAPE ARCHITECT

3700 E MERCER WAY
BARNABIE POINT K-8

NO.	DATE	DESCRIPTION
2	01/06/2026	BLDG PERMIT CORRS
1	10/22/2025	BLDG PERMIT CORRS

4 JUNE 2025
BUILDING PERMIT

PROJECT: HNTS

PLANTING PLAN

L-301

© ANJALI GRANT DESIGN LLC ORIGINAL SHEET SIZE: 24" X 36"

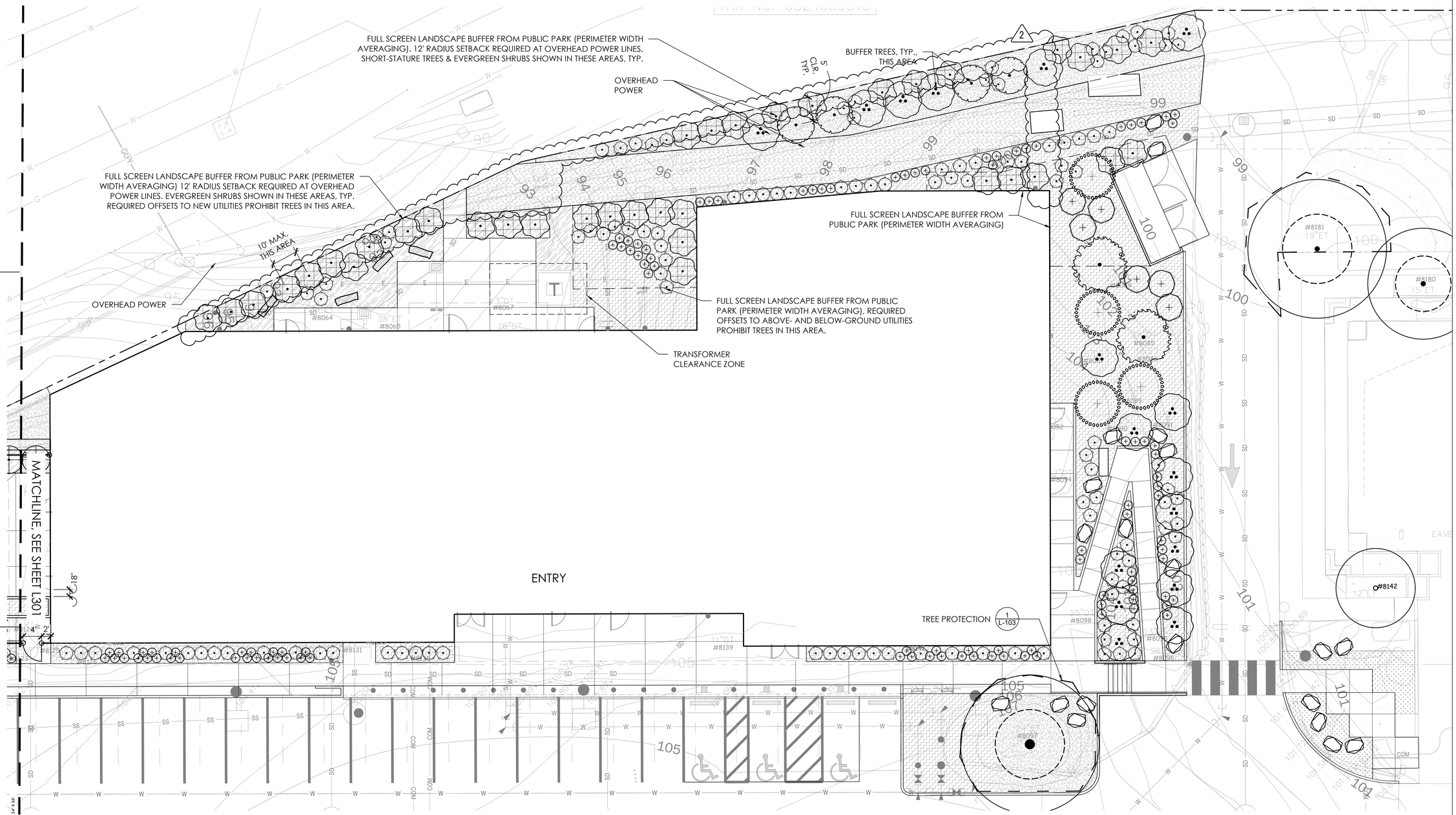

1 Planting Plan
scale 1" = 10' - 0"

Karen Kiest
Landscape Architects
111 west john street suite 306
seattle washington 98119
tel 206 323 6032

3700 E MERCER WAY
BARNABIE POINT K-8

NO.	DATE	DESCRIPTION
2	01/06/2026	BLDG PERMIT CORRS
1	10/22/2025	BLDG PERMIT CORRS

4 JUNE 2025
BUILDING PERMIT

PROJECT: HNTS

PLANTING PLAN

L-302

© ANJALI GRANT DESIGN LLC
ORIGINAL SHEET SIZE 24" X 36"

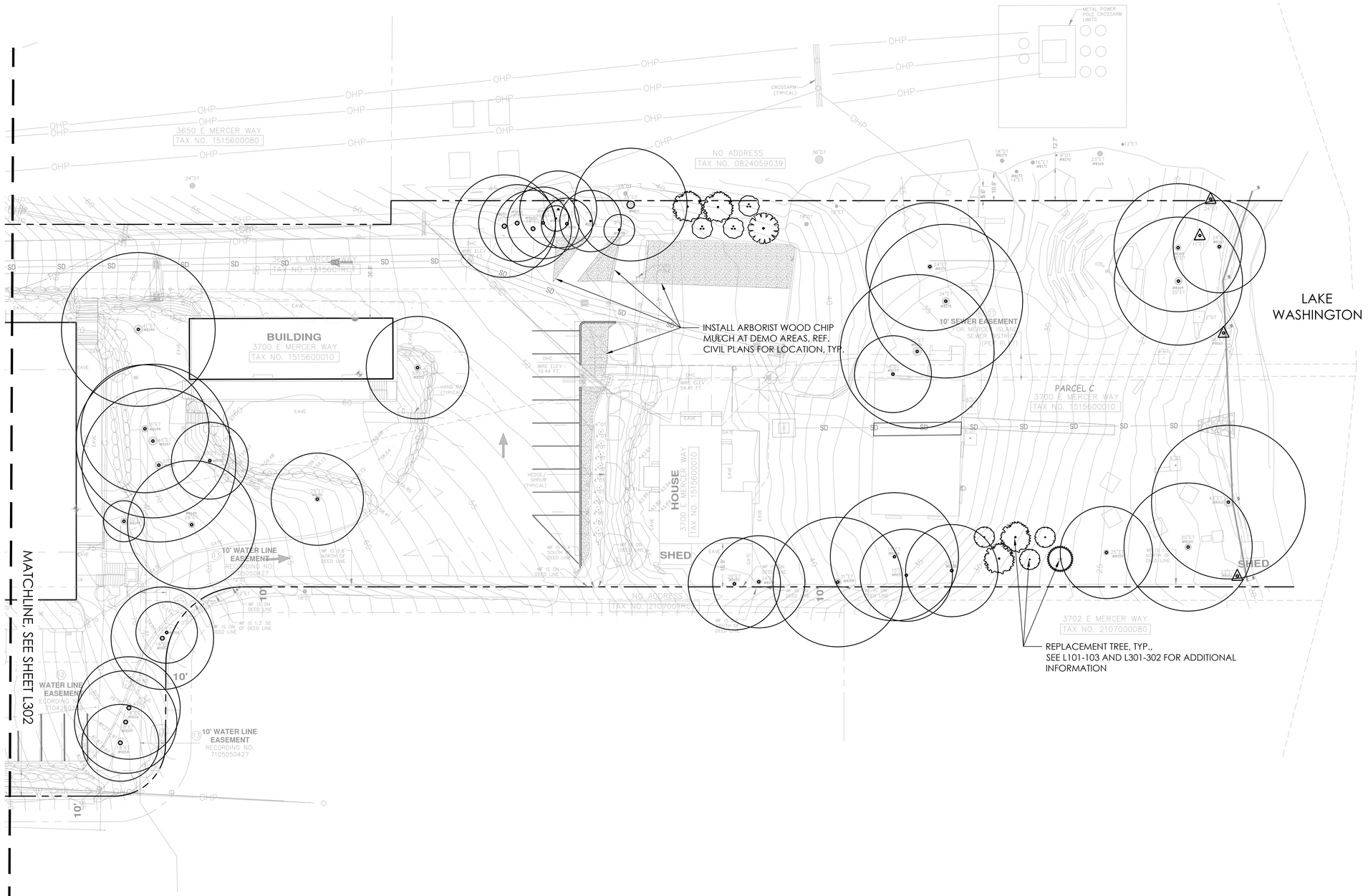

1 Planting Plan
scale 1" = 20' - 0"

0 20 40

© ANNALI GRANT DESIGN LLC ORIGINAL SHEET SIZE: 24" X 36"

Karen Kiest
Landscape Architects
111 west john street suite 306
seattle washington 98119
tel 206 323 6032

STATE OF WASHINGTON
KAREN S. KIEST
LICENSED LANDSCAPE ARCHITECT
NO 650 EXP. 07/16/2027

3700 E MERCER WAY
BARNABIE POINT K-8

NO.	DATE	DESCRIPTION
2	01/06/2026	BLDG PERMIT CORRS
1	10/22/2025	BLDG PERMIT CORRS

4 JUNE 2025
BUILDING PERMIT

PROJECT: HNTS

PLANTING PLAN

L-302.1

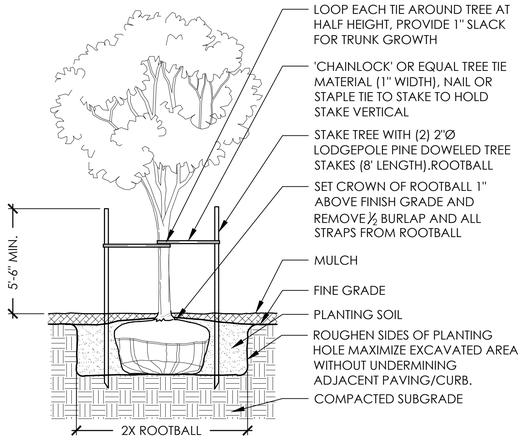

2 DECIDUOUS TREE PLANTING
SCALE: 1" = 1'-0"

NOTES

1. BARK MULCH SHOULD NOT COME IN CONTACT WITH TREE TRUNKS OR SHRUB BRANCHES & STEMS.
2. SCARIFY EDGES OF ALL PLANTING PITS TO ENCOURAGE WATER PERCOLATION AND ROOT PENETRATION.
3. SET CROWN OF ROOTBALL 1" ABOVE FINISH GRADE AND REMOVE BURLAP AND TWINE FROM TOP HALF OF ROOTBALL

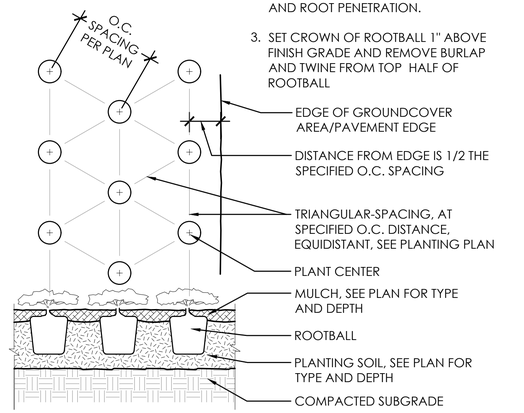

4 SHRUB/GROUNDCOVER PLANTING & SPACING
SCALE: NTS

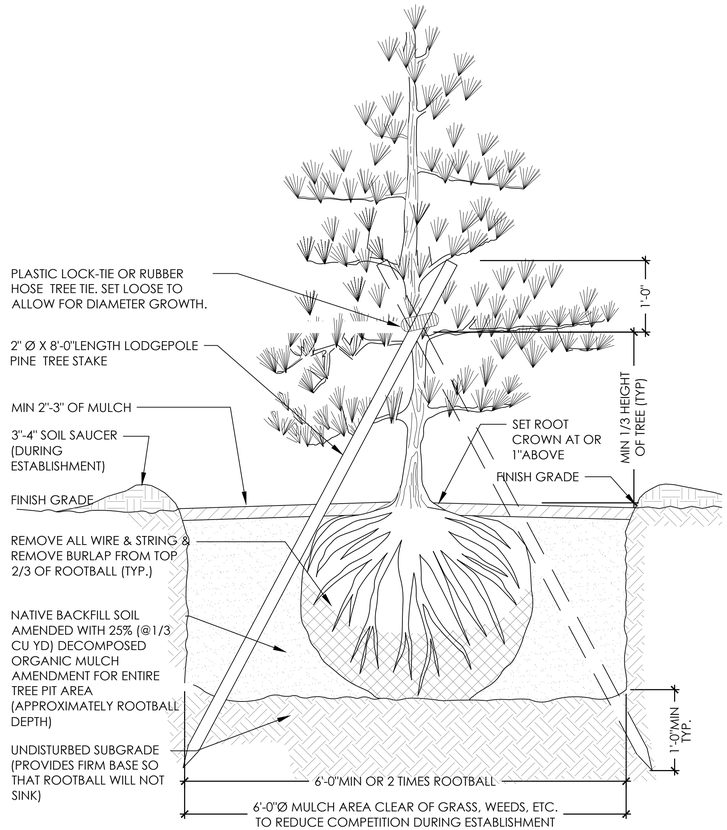

3 CONIFEROUS TREE PLANTING
SCALE: 1" = 1'-0"

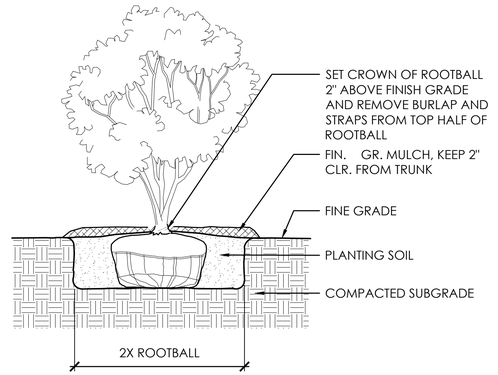

4 MULTISTEM TREE PLANTING ON GRADE
SCALE: 1" = 1'-0"

HNTS-DETAILS.DWG

Karen Kiest
Landscape Architects
111 west john street suite 306
seattle washington 98119
tel 206 323 6032

STATE OF WASHINGTON
KAREN S. KIEST
NO. 850 EXP. 12/10/2007
LICENSED LANDSCAPE ARCHITECT

3700 E MERCER WAY
BARNABIE POINT K-8

NO.	DATE	DESCRIPTION
2	01/06/2026	BLDG PERMIT CORRS
1	10/22/2025	BLDG PERMIT CORRS

4 JUNE 2025
BUILDING PERMIT

PROJECT: HNTS

PLANTING DETAILS

L-303

© ANJALI GRANT DESIGN LLC ORIGINAL SHEET SIZE: 24" X 36"

VALVE SCHEDULE

NUMBER	MODEL	SIZE	TYPE	GPM	PSI	PSI @ POC
1	RAIN BIRD PEB	1"	SHRUB SPRAY	1.3	31.4	31.4
2	RAIN BIRD PEB	1"	SHRUB SPRAY	2.88	31.6	31.6
3	RAIN BIRD PEB	1"	SHRUB SPRAY	2.2	31.4	31.6
4	RAIN BIRD PEB	1"	SHRUB SPRAY	8.03	32.0	33.8
5	RAIN BIRD PEB	1"	SHRUB SPRAY	14.95	34.9	39.4
6	RAIN BIRD PEB	1"	SHRUB SPRAY	11.42	33.3	38.5
7	RAIN BIRD PEB	1"	SHRUB SPRAY	17.77	37.7	42.7
8	RAIN BIRD PEB	1"	SHRUB SPRAY	11.11	35.2	37.7
9	RAIN BIRD PEB	1"	SHRUB SPRAY	4.85	32.3	32.6

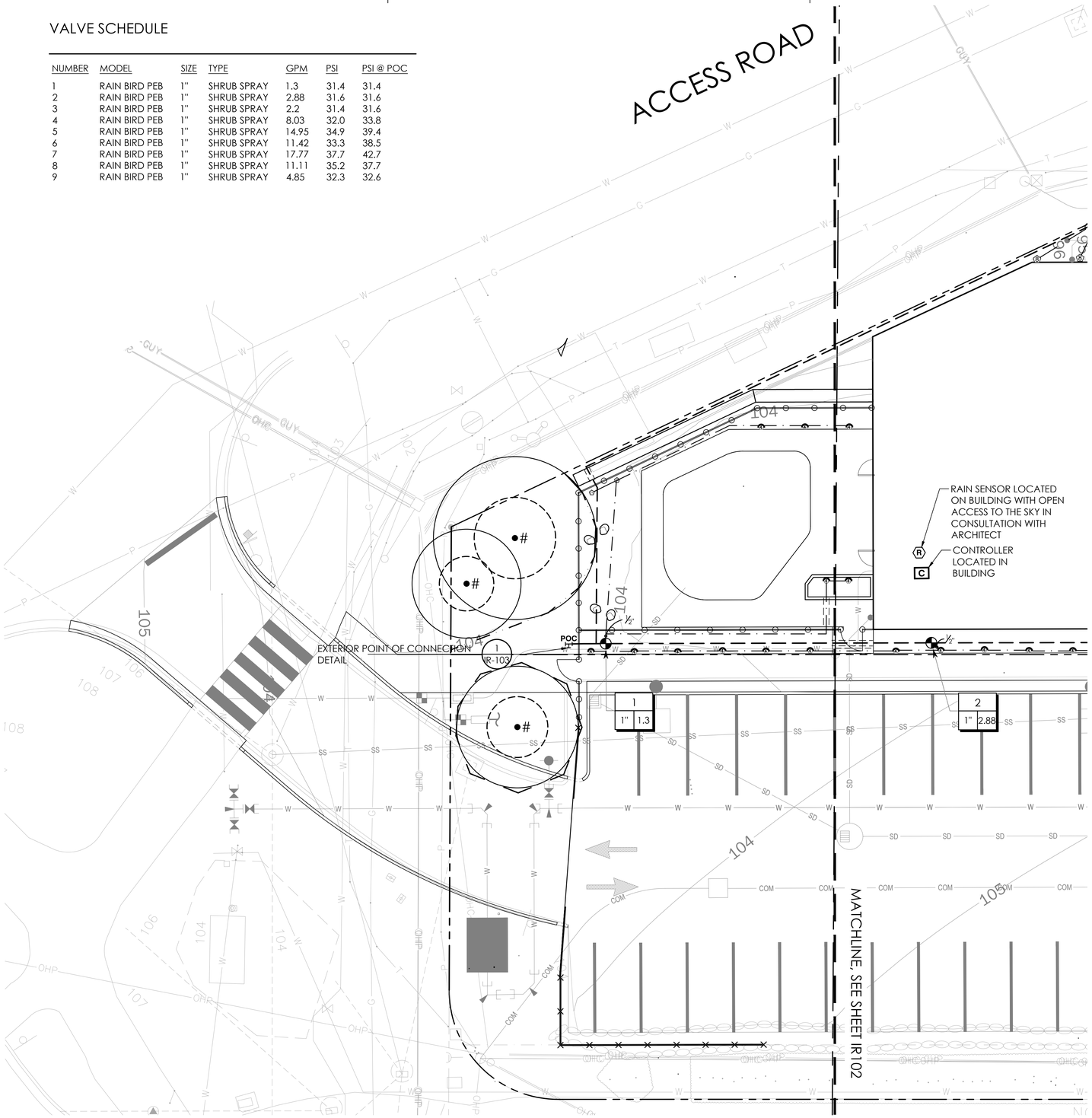

1 Landscape Irrigation Plan
scale 1" = 10' - 0"

0 10 20

IRRIGATION SCHEDULE

SYMBOL	MANUFACTURER/MODEL	PSI	DETAIL
2Q 2H 2TQ 2F 4Q 4H 4TQ 4F	RAIN BIRD 1812-SAM-PRS-U SQ SERIES	30	
EST LCS RCS CST SST	RAIN BIRD 1812-SAM-PRS-U 15 STRIP SERIES	30	
08HE–VAN 12HE–VAN 10HE–VAN 15HE–VAN	RAIN BIRD 1812-SAM-PRS-U HE-VAN SERIES	30	

SYMBOL	MANUFACTURER/MODEL/DESCRIPTION	DETAIL
	RAIN BIRD PEB 1IN., 1-1/2IN., 2IN. PLASTIC INDUSTRIAL REMOTE CONTROL VALVE. LOW FLOW OPERATING CAPABILITY, GLOBE CONFIGURATION.	2/IR-103
C	RAIN BIRD ESPLXME2 12 STATION TRADITIONALLY-WIRED, COMMERCIAL CONTROLLER. INDOOR/OUTDOOR, PLASTIC WALL-MOUNT ENCLOSURE.	3/IR-103
R	RAIN BIRD RSD-CEX RAIN SENSING DEVICE, CONDUIT MOUNT. WITH THREADED ADAPTER, EXTENSION WIRE.	
POC	POINT OF CONNECTION 2"	1/IR-103
	IRRIGATION LATERAL LINE: PVC CLASS 200	4/IR-103
	IRRIGATION MAINLINE: PVC SCHEDULE 40	
	PIPE SLEEVE: DUCTILE IRON PIPE - CLASS 52	
	PIPE SLEEVE: PVC SCHEDULE 40	

Valve Callout
- # — Valve Number
- #" — Valve Flow
- # — Valve Size

IRRIGATION NOTES

1. ALL PROPOSED PLANTING AREAS WILL BE WATERED WITH A COMPLETE IN-GROUND AUTOMATIC IRRIGATION SYSTEM .
2. IRRIGATION SYSTEM IS BASED ON THE MINIMUM OPERATING PRESSURE OF THE SPRINKLERS AND THE MAXIMUM FLOW DEMAND FOR STATIONS PROPOSED. THE CONTRACTOR SHALL VERIFY POINT OF CONNECTION LOCATION AND SUFFICIENT WATER PRESSURE PRIOR TO CONSTRUCTION.
3. LOCATION OF POINT OF CONNECTION, MAINLINE AND SLEEVES AS SHOWN ARE SCHEMATIC. LOCATE MAINLINE AND VALVES TO AVOID ANY CONFLICTS BETWEEN THE SPRINKLER SYSTEM AND PLANTING, UTILITIES, PAVEMENTS AND ARCHITECTURAL FEATURES.
4. DO NOT WILLFULLY DESIGN AND INSTALL THE SPRINKLER SYSTEM WHERE IT IS OBVIOUS IN THE FIELD THAT OBSTRUCTIONS, GRADE DIFFERENCES, OR DIFFERENCES IN THE AREA DIMENSIONS EXIST THAT MIGHT NOT HAVE BEEN CONSIDERED IN THE ENGINEERING. SUCH OBSTRUCTIONS OR DIFFERENCES SHOULD BE BROUGHT TO THE ATTENTION OF THE OWNER'S AUTHORIZED REPRESENTATIVE. IN THE EVENT THIS NOTIFICATION IS NOT PERFORMED, THE IRRIGATION CONTRACTOR SHALL ASSUME FULL RESPONSIBILITY FOR ANY REVISIONS NECESSARY.
5. CONTRACTOR SHALL BE RESPONSIBLE FOR SLEEVES AND CHASES UNDER PAVING, THROUGH WALLS, ETC, UNLESS OTHERWISE NOTED.
6. WHERE THE FIELD CONDITIONS REQUIRE ADJUSTMENTS, HEADS SHALL BE ADDED OR DELETED IN ACCORDANCE WITH THE IRRIGATION LEGEND OR MANUFACTURER'S SPECIFICATIONS. PIPE SIZING SHALL BE ADJUSTED ACCORDINGLY, AND WATER VELOCITY SHALL NOT EXCEED 5 FEET PER SECOND.
7. SIZE PIPE ACCORDING TO PIPE SIZING CHART.
8. INSTALL BACKFLOW PREVENTION DEVICE AS REQUIRED BY LOCAL CODES AND HEALTH DEPARTMENT REQUIREMENTS.
9. IN ADDITION TO THE PIPE SLEEVES SHOWN ON THE DRAWINGS, THE CONTRACTOR SHALL BE RESPONSIBLE FOR THE INSTALLATION OF CONTROL WIRE SLEEVES OF SUFFICIENT SIZE UNDER ALL PAVED AREAS AND TO CLOCK LOCATION.
10. ROUTE COMMON AND CONTROL WIRE FROM THE CONTROLLER TO CONTROL VALVES. CONNECT TO MAINLINE, EXCEPT AT SLEEVES. PROVIDE ONE SPARE WIRE FROM THE CONTROLLER TO THE FARTHEST VALVE ON THE SITE AND AT THE ENDS OF THE MAINLINE RUNS.
11. THE IRRIGATION SYSTEM IS DESIGNED TO BE WINTERIZED THROUGH THE DRAIN VALVE AT THE POINT OF CONNECTION. COMPRESSED AIR CAN ALSO BE USED THROUGH THE QUICK COUPLER VALVE AT THE POINT OF CONNECTION FOR BLOW-OUT.
12. COORDINATE RAIN SENSOR LOCATION WITH ARCHITECT. WIRELESS RAIN SENSOR MAY BE USED IF LINE-OF-SIGHT OF CONTROLLER LOCATION IS DETERMINED TO BE COMPATIBLE. OTHERWISE, USE WIRED SENSOR AS SPECIFIED.

Karen Kiest
Landscape Architects
111 west john street suite 306
seattle washington 98119
tel 206 323 6032

STATE OF WASHINGTON KAREN S. KIEST No 885 EXP. 07/19/2027 LICENSED LANDSCAPE ARCHITECT

3700 E MERCER WAY
BARNABIE POINT K-8

NO.	DATE	DESCRIPTION
2	01/06/2026	BLDG PERMIT CORRS
1	10/22/2025	BLDG PERMIT CORRS

4 JUNE 2025
BUILDING PERMIT

PROJECT: HNTS

LANDSCAPE IRRIGATION PLAN

IR-101

© ANJALI GRANT DESIGN LLC ORIGINAL SHEET SIZE: 24" X 36"

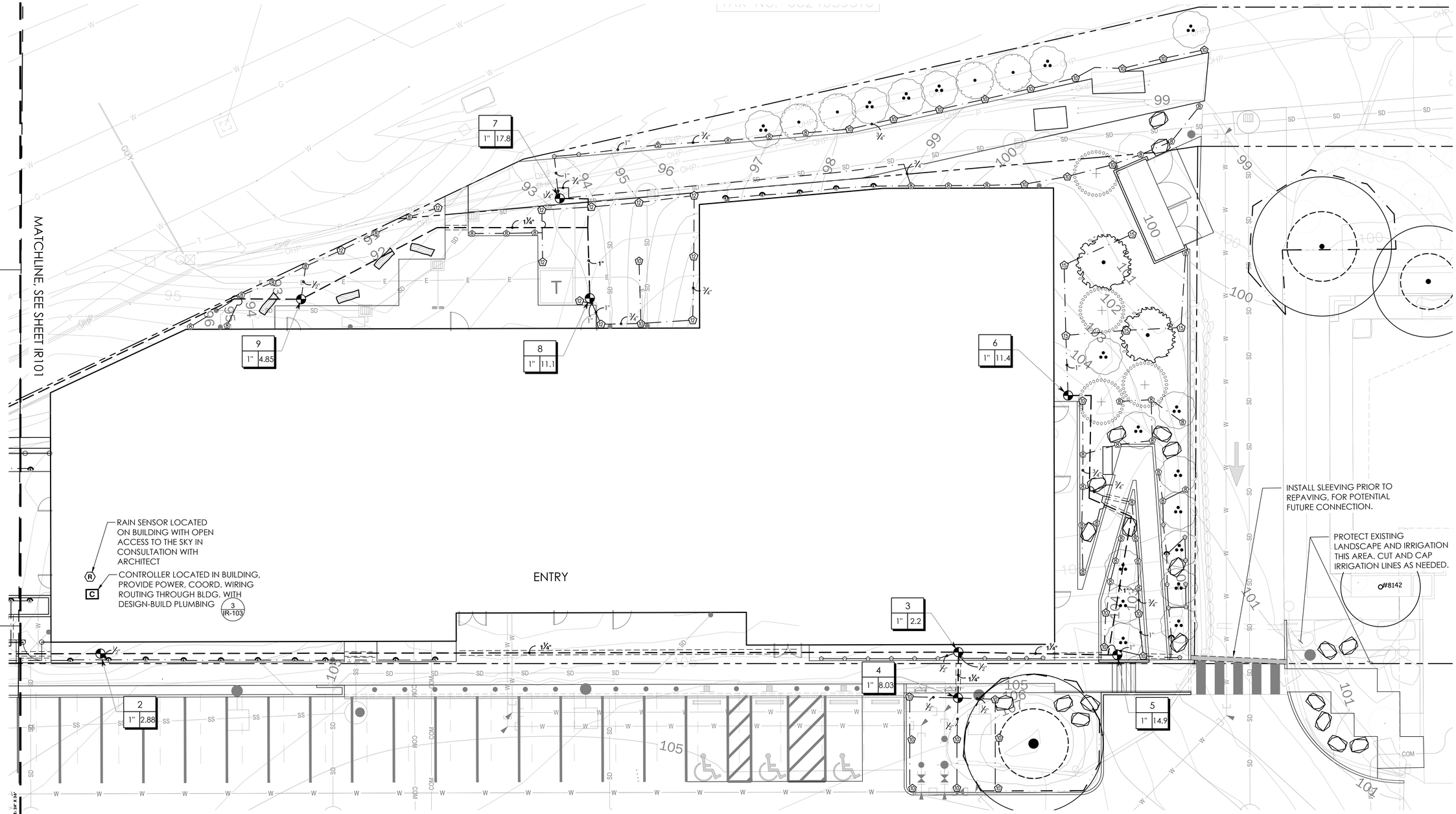

1 Landscape Irrigation Plan
scale 1" = 10' - 0"

0 10 20

NOTES
1. SEE IR101 FOR IRRIGAITON NOTES & SCHEDULE

Karen Kiest
Landscape Architects
111 west john street suite 306
seattle washington 98119
tel 206 323 6032

STATE OF WASHINGTON
KAREN S. KIEST
NO. 850 EXP. 12/10/2007
LICENSED LANDSCAPE ARCHITECT

3700 E MERCER WAY
BARNABIE POINT K-8

NO.	DATE	DESCRIPTION
2	01/06/2026	BLDG PERMIT CORRS
1	10/22/2025	BLDG PERMIT CORRS

4 JUNE 2025
BUILDING PERMIT

PROJECT: HNTS

LANDSCAPE IRRIGATION PLAN

IR-102

© ANJALI GRANT DESIGN L
ORIGINAL SHEET SIZE: 24" X 36"

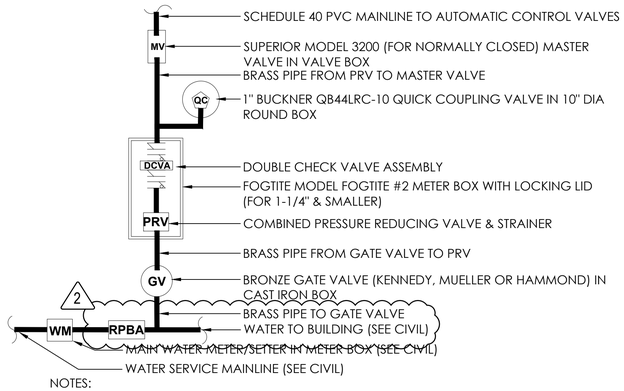

NOTES:
1. ALL COMPONENTS OF SCHEMATIC POINT OF CONNECTION SHALL BE INSTALLED PER MERCER ISLAND STANDARD DETAILS.
2. BACKFLOW PREVENTION DEVICE INSTALLATIONS REQUIRE INSPECTION, TESTING, AND CERTIFICATION BY CITY INSPECTION SERVICES.

1 EXTERIOR POINT OF CONNECTION DETAIL
3/4" = 1'-0" P-IN-HNTS-03

THE ISOLATION VALVE TO BE THE SAME SIZE AS THE MAINLINE. PVC PIPE & FITTINGS DOWNSTREAM OF ISOLATION VALVE TO BE SIZED PER PIPE SIZING CHART OR AS NOTED ON PLANS.

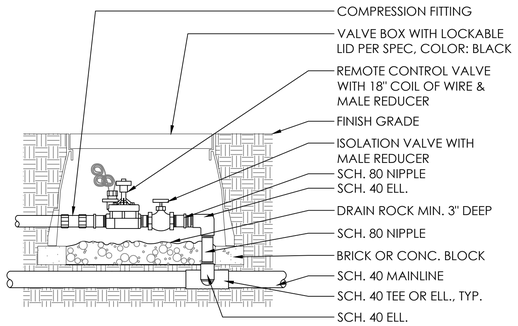

2 REMOTE CONTROL VALVE
1" = 1'-0" 328406.13-01

ALL WIRE TO BE INSTALLED INSTALL PER LOCAL ELECTRICAL CODE. VERIFY LOCATION PRIOR TO INSTALLATION. CONTROLLER PER MANUFACTURER'S INSTRUCTIONS.

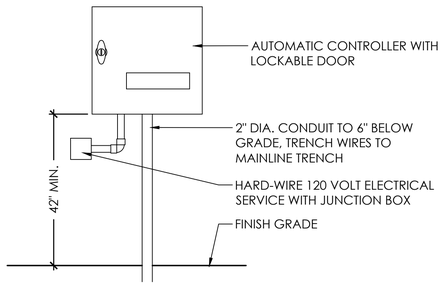

3 WALL-MOUNTED IRRIGATION CONTROLLER
1" = 1'-0" 328409.13-01

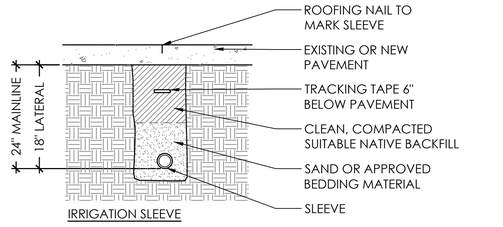

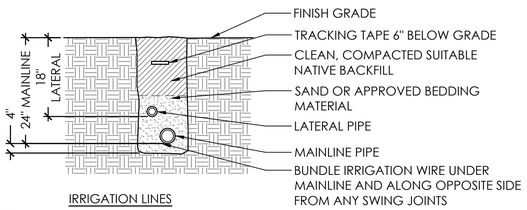

4 IRRIGATION LINE AND SLEEVE TRENCH
1" = 1'-0" 328409.76-01

NOTE:
BRASS PIPE AND FITTINGS TO BE USED FOR GATE VALVE AT POINT OF CONNECTION

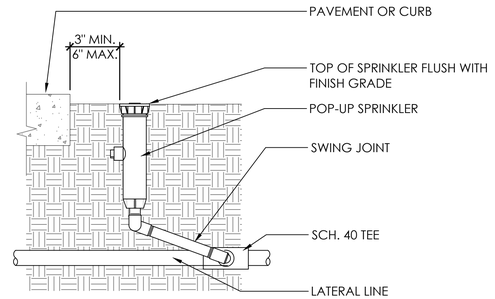

5 POP-UP SPRINKLER
1" = 1'-0" 328403-03

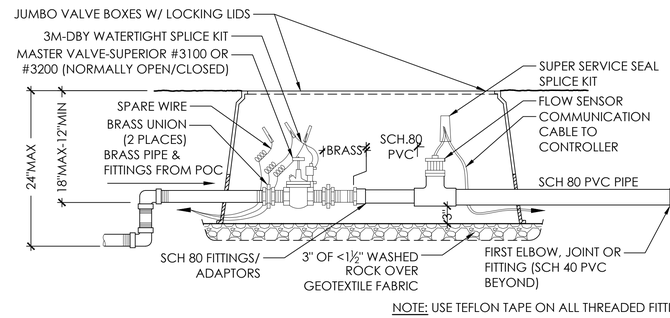

NOTE: USE TEFLON TAPE ON ALL THREADED FITTINGS

6 MASTER VALVE & FLOW SENSOR
1" = 1'-0" 328406.23-02

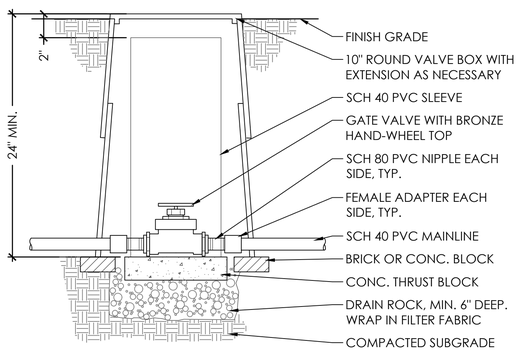

7 GATE VALVE
1" = 1'-0" 328406.19-01

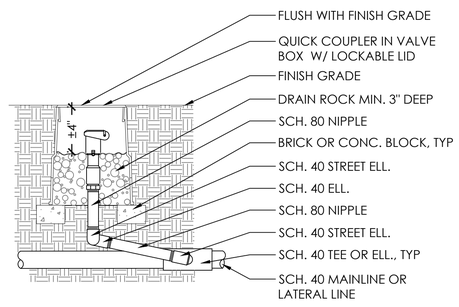

8 QUICK COUPLER
1" = 1'-0" 328406.43-01

© ANJALI GRANT DESIGN LLC ORIGINAL SHEET SIZE: 24" X 36"

Karen Kiest
Landscape Architects
111 west john street suite 306
seattle washington 98119
tel 206 323 6032

STATE OF WASHINGTON KAREN S. KIEST 22404 REGISTERED LANDSCAPE ARCHITECT

3700 E MERCER WAY
BARNABIE POINT K-8

NO.	DATE	DESCRIPTION
2	01/06/2026	BLDG PERMIT CORRS
1	10/22/2025	BLDG PERMIT CORRS

4 JUNE 2025
BUILDING PERMIT

PROJECT: HNTS

LANDSCAPE IRRIGATION DETAILS

IR-103

LIST OF DRAWINGS

◦ARCHITECTURAL
1 SITE PLAN, GRADING, PAVING
2 UPPER FLOOR
3 LOWER FLOOR PLAN, STAIR SECTIONS & DETAILS
4 BASEMENT PLAN, HIGH ROOF PLAN, SECTIONS & DETAILS
5 DOOR SCHEDULE, INTERIOR ELEVATION & DETAILS
6 FINISH SCHEDULE & INTERIOR ELEVATION
7 BIMA & CHAPEL DETAILS
8 BUILDING SECTIONS & DETAILS
9 BUILDING SECTIONS & SECTION DETAILS
10 EXTERIOR ELEVATIONS & DETAILS
11 INTERIOR & EXTERIOR WALL SECTIONS

◦STRUCTURAL
S1 FOUNDATION PLAN
S2 FOUNDATION, ELEVATION & DETAILS
S3 FLOOR FRAMING PLANS
S4 ROOF FRAMING PLANS
S5 FRAME WALL ELEVATIONS & DETAILS
S6 ROOF FRAMING DETAILS

◦MECHANICAL
M1 SITE PLAN & DETAILS & SCHEDULES
M2 FOUNDATION PLAN & BASEMENT PLAN
M3 LOWER FLOOR PLAN & DETAILS
M4 UPPER FLOOR PLAN & DETAILS

◦ELECTRICAL
E1 SITE PLAN, LEGEND & SCHEDULES
E2 UPPER FLOOR PLAN
E3 LOWER FLOOR PLAN
E4 BASEMENT FLOOR PLAN, BIMA PLAN & RISER DIAGRAM

FIRE ZONE THREE
B 2 Occupancy Group
111 H.T 1hr
OCC LOAD B.LEVEL 159 (159)
Lower " 76 ⟵EXCLUDE
upper " ~~680~~ 680 (839)
Two story w/Base ment ~~145~~ 965
Floor area 11793 upper
10035 lower
5965 basement
27793

0.0 TOPSOIL
1.5 HEAVILY WEATHERED GLACIAL TILL
4.0 HARD GLACIAL TILL
TEST PIT- 1

0.0 TOPSOIL
1.0 HEAVILY WEATHERED GLACIAL TILL
5.5 6.0 GLACIAL TILL
TEST PIT- 2

0.0 TOPSOIL
1.5 WEATHERED GLACIAL TILL SANDIER AND MORE BOULDERS WITH DEPTH
7.6 6.0 SANDY GLACIAL TILL
TEST PIT- 3

0.0 TOPSOIL
1.5 HEAVILY WEATHERED GLACIAL TILL
3.5 MODERATE WEATHERED GLACIAL TILL
5.0 HARD GRAY GLACIAL TILL
TEST PIT- 4

TEST PIT SOIL DATA (LOCATIONS ON KEY MAP)
SEE REPORT IN SPECIFICATION SEC 1
(PREPARED BY ENGINEER GEO. E LAMB)

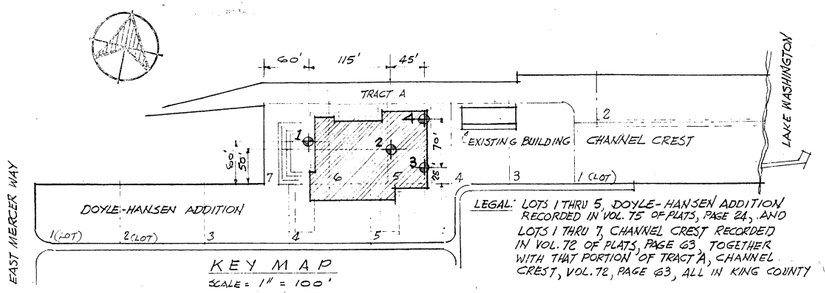

LEGAL: LOTS 1 THRU 5, DOYLE-HANSEN ADDITION RECORDED IN VOL. 75 OF PLATS, PAGE 24, AND LOTS 1 THRU 7, CHANNEL CREST RECORDED IN VOL. 72 OF PLATS, PAGE 63, TOGETHER WITH THAT PORTION OF TRACT A, CHANNEL CREST, VOL. 72, PAGE 63, ALL IN KING COUNTY

KEY MAP
SCALE: 1" = 100'
(SHOWING SOIL TEST PIT LOCATIONS)

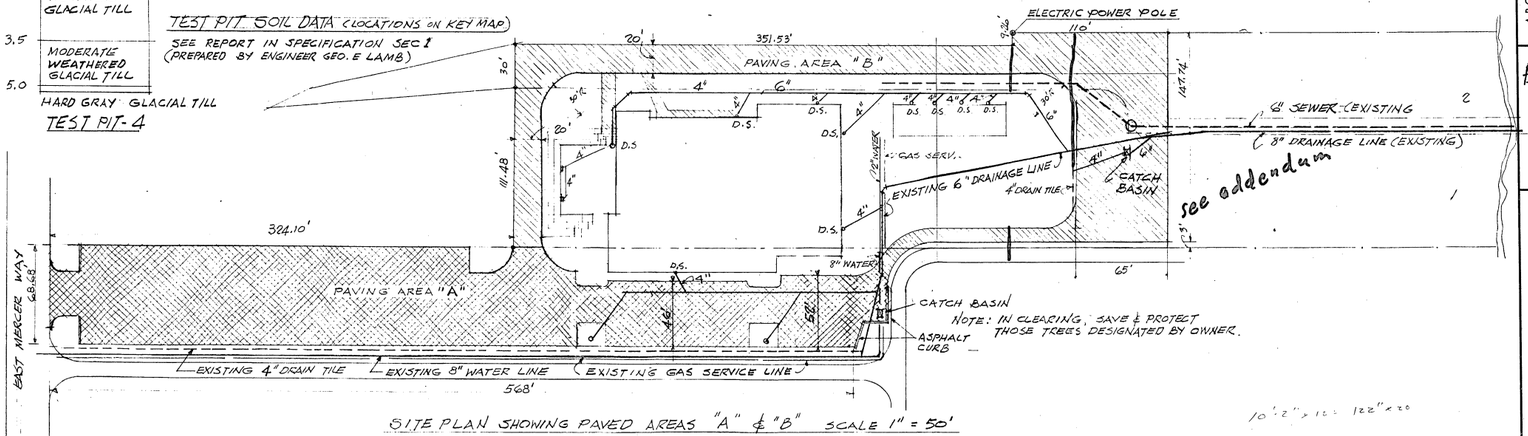

SITE PLAN SHOWING PAVED AREAS "A" & "B" SCALE 1" = 50'

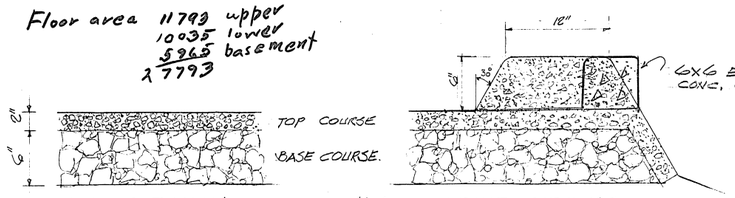

ASPHALT PAVING SCALE 1½" = 1'-0" ASPHALT CURBING

5965
10035
19928 inc. roof overhang & Loggia
35,928

APPROVED
THESE DRAWINGS ARE AN OFFICIAL RECORD AND MUST BE MAINTAINED IN A GOOD CONDITION ON THE JOB SITE AT ALL TIMES FOR USE BY THE BUILDING INSPECTOR.
Date: 12-17-70
By:

Office Copy

70-175

PARKING REQUIREMENT
SANCTUARY: FIXED SEATING 408
1 CAR PER 5 SEATS = 82
ADMINISTRATIVE PARKING = 9
PROVIDED PARKING = 91

SEE SPECIFICATIONS FOR CATCH BASINS & AREA DRAINS

SITE PLAN SCALE 1" = 20'
(SEE PLAN ABOVE FOR ADDED UTILITY LAYOUT)

HERZL-NER TAMID CONSERVATIVE CONGREGATION
3700 East Mercer Way
1971 Sanctuary & Social Hall

70-175

ARCHITECT
JAMES J. CHIARELLI A.I.A.
1717 EAST PINE STREET
SEATTLE 22, WASHINGTON EA 3-2000

EA 3-2 0060
15 TISHRI 5731

ENGINEERS

APPROVED BY

DATE	REVISIONS
9-15-70	

DATE	DRAWN	CHECKED
	J/C	DMZ

DRAWING SITE PLAN, GRADING, PAVING

TITLE SANCTUARY & SOCIAL CENTER FOR HERZL-NER TAMID CONSERVATIVE CONGREGATION 3700 E MERCER WAY MERCER ISLAND WASHINGTON 98040

SHEET 1 OF 5 7 JOB 69

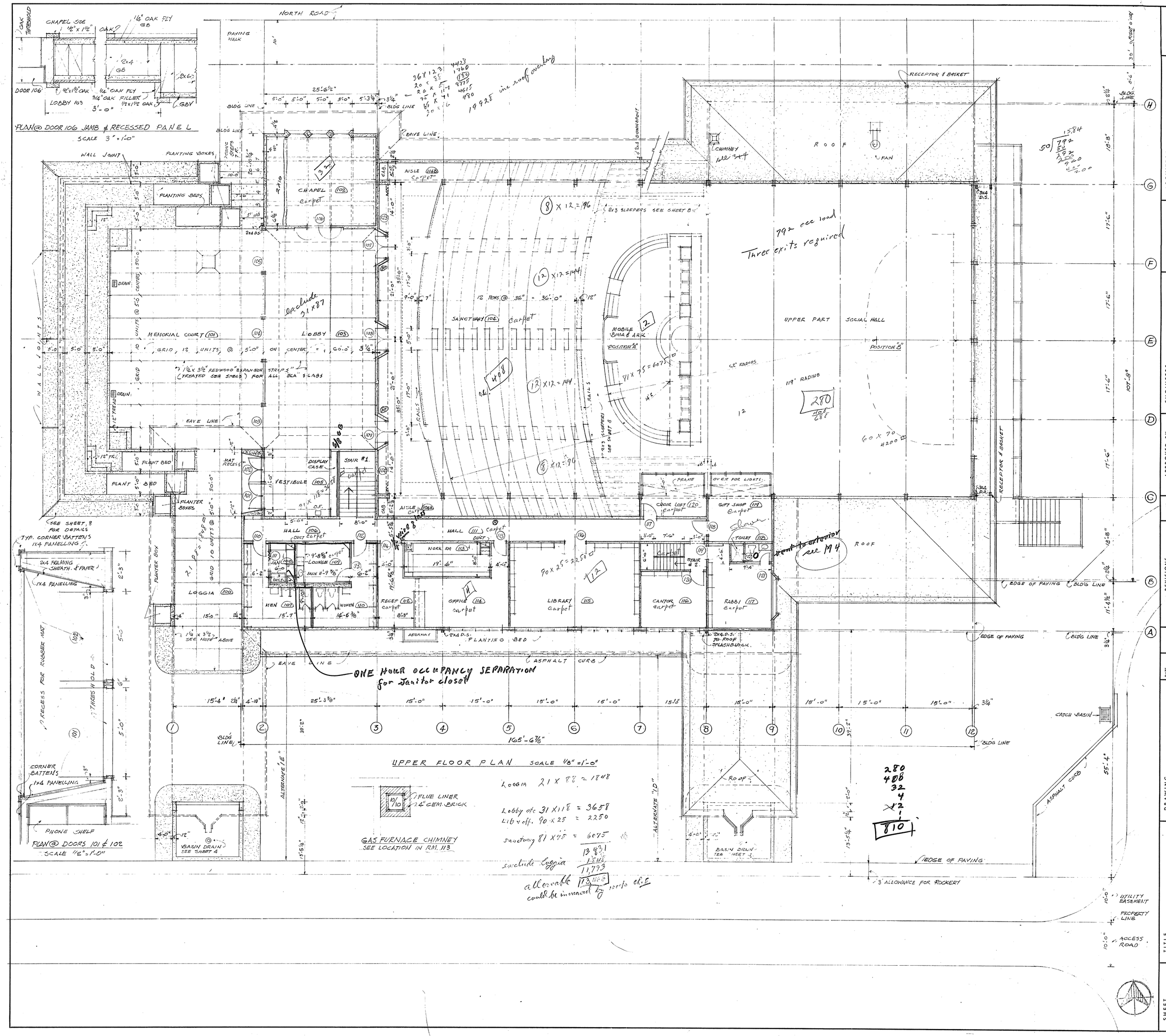

ARCHITECT
JAMES J. CHIARELLI A.I.A.
1717 EAST PINE STREET
SEATTLE 22, WASHINGTON EA 3-2000

15 TISHRI 5731

ENGINEERS

APPROVED BY

DATE

REVISIONS

DATE

DRAWN JJC

CHECKED DMC

DRAWING
UPPER FLOOR PLAN

TITLE
SANCTUARY & SOCIAL CENTER FOR HERZL-NER-TAMID CONSERVATIVE CONGREGATION 3700 E. MERCER WAY MERCER ISLAND WASHINGTON 98040

SHEET 2 OF 11

JOB 5769

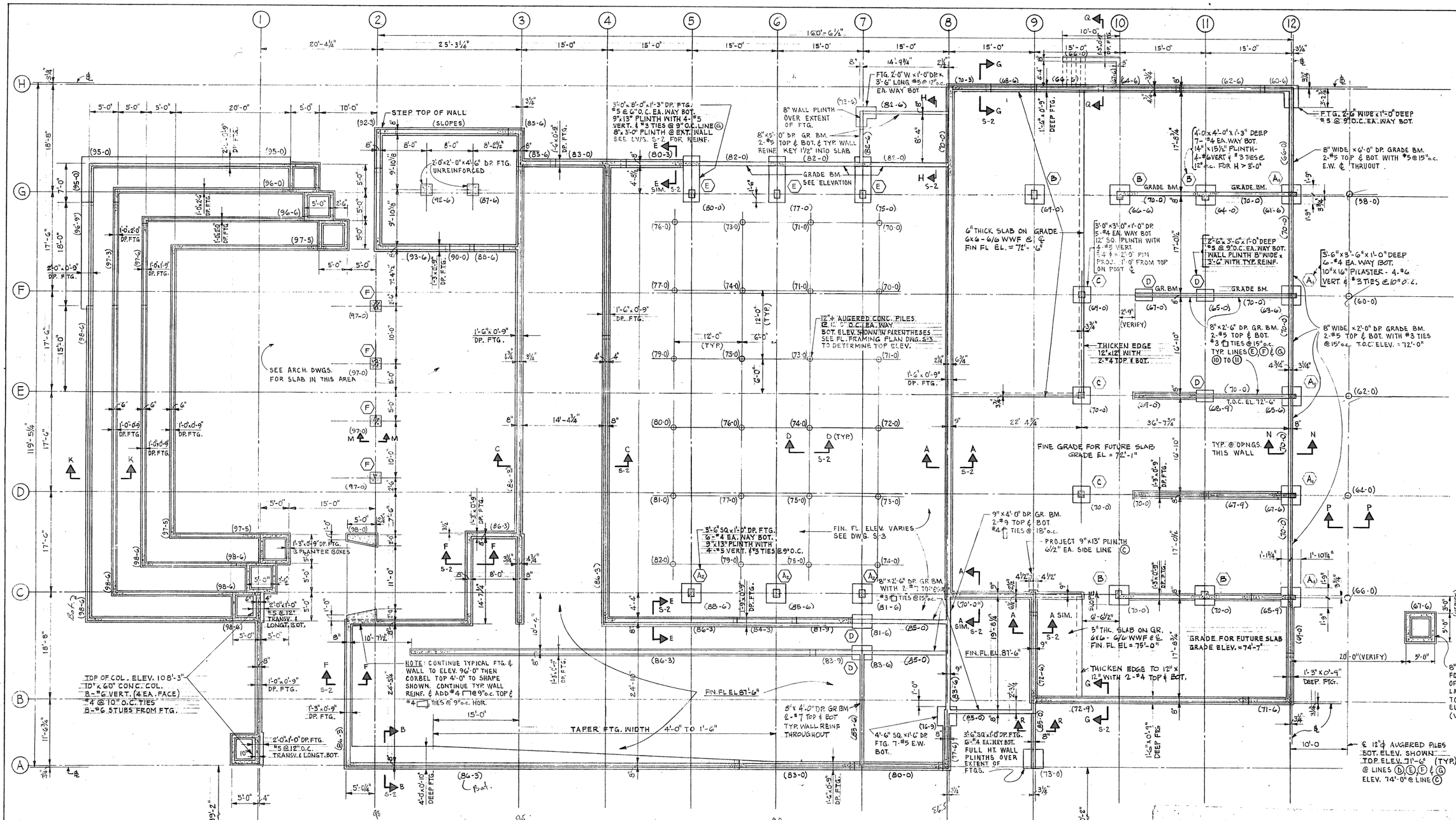
STEP TOP OF WALL (SLOPES)
SEE ARCH. DWGS. FOR SLAB IN THIS AREA
12"ϕ AUGERED CONC. PILES @ 12'-0" O.C. EA. WAY BOT. ELEV. SHOWN IN PARENTHESES SEE FL. FRAMING PLAN DWG. S-3 TO DETERMINE TOP ELEV.
GRADE BM. SEE ELEVATION
6" THICK SLAB ON GRADE 6x6 - 6/6 WWF @ ℄ FIN FL EL. = 72'- 6"
FINE GRADE FOR FUTURE SLAB GRADE EL = 72'-1"
THICKEN EDGE 12"x12" WITH 2-#4 TOP & BOT.
T.O.C. EL. 72'-6"
TYP. @ OPNGS. THIS WALL
FIN. FL. ELEV. VARIES SEE DWG. S-3
FIN. FL. EL. 87'-6"
GRADE FOR FUTURE SLAB GRADE ELEV. = 74'-7"
5" THK. SLAB ON GR. 6x6 - 6/6 WWF @ ℄ FIN. FL. EL = 75'-0"
THICKEN EDGE TO 12"x 12" WITH 2-#4 TOP & BOT.
TAPER FTG. WIDTH 4'-0" TO 1'-6"
NOTE: CONTINUE TYPICAL FTG. & WALL TO ELEV. 96'-0" THEN CORBEL TOP 4'-0" TO SHAPE SHOWN. CONTINUE TYP. WALL REINF. & ADD #4 ⊓ @ 9"o.c. TOP & #4 TIES @ 9"o.c. HOR.
TOP OF COL. ELEV. 108'-3" 10" x 60" CONC. COL. 8-#6 VERT. (4 EA. FACE) #4 @ 10" O.C. TIES 8-#6 STUBS FROM FTG.
FTG. 2'-6" WIDE x 1'-0" DEEP #5 @ 9" O.C. EA. WAY BOT.
8" WIDE x 6'-0" DP. GRADE BM. 2-#5 TOP & BOT. WITH #5 @ 15" o.c. E.W. ℄ THRUOUT.
4'-0" x 4'-0" x 1'-3" DEEP 7-#4 EA. WAY BOT. 14" x (15¼") PLINTH 4-#6 VERT & #3 TIES @ 12" o.c. FOR H > 3'-0"
3'-0" x 3'-0" x 1'-0" DP 5-#4 EA. WAY BOT 12" SQ. PLINTH WITH 4-#5 VERT. & #3 x 2'-0" PIN PROJ. 1'-0" FROM TOP ON POST ℄
2'-6" x 3'-6" x 1'-0" DEEP #5 @ 9" O.C. EA. WAY BOT. WALL PLINTH 8" WIDE x 3'-0" WITH TYP. REINF.
3'-6" x 3'-6" x 1'-0" DEEP 4-#4 EA. WAY BOT. 10" x 16" PILASTER - 4-#6 VERT & #3 TIES @ 10" O.C.
8" WIDE x 2'-0" DP. GRADE BM. 2-#5 TOP & BOT. WITH #3 TIES @ 15" o.c. TYP. LINES (E) (F) & (G) (10) TO (11)
8" x 2'-6" DP. GR. BM. 2-#5 TOP & BOT. #3 TIES @ 15" o.c.
9" x 4'-0" DP. GR. BM. 2-#5 TOP & BOT. #4 TIES @ 18" o.c.
8" x 2'-6" DP. GR. BM. WITH 2-#7 TOP & BOT. #3 TIES @ 15" o.c.
5'-0" x 4'-0" DP. GR BM 2-#7 TOP & BOT TYP. WALL REINF THROUGHOUT
4'-6" SQ. x 1'-6" DP FTG. 7-#5 E.W. BOT.
3'-6" SQ. x 1'-0" DP. FTG. 6-#4 EA. WAY BOT. FULL HT. WALL PLINTHS OVER EXTENT OF FTGS.
8" FDN. WALL FOR SUPPORT OF STAIR LANDING. TOP OF CONC. EL. 75'-0" (VERIFY)
℄ 12"ϕ AUGERED PILES BOT. ELEV. SHOWN TOP ELEV. 71'-6" (TYP.) @ LINES (D) (E) (F) & (G) ELEV. 74'-0" @ LINE (C)
2'-0" x 2'-0" x 4'-6" DP. FTG. UNREINFORCED
2'-0" x 1'-0" DP. FTG. #5 @ 12" O.C. TRANSV. & LONGT. BOT.
3'-3" x 0'-9" DP. FTG. 3 PLANTER BOXES
4" TRANSV. & LONGT. BOT.
2'-0" x 1'-0" DP. FTG. #5 @ 12" O.C. TRANSV. & LONGT. BOT.
1'-3" x 0'-9" DP. FTG.
1'-6" x 0'-9" DP. FTG.
1'-0" x 0'-9" DP. FTG.
1'-0" x 2'-0" DP. FTG.
1'-0" x 2'-6" DP. FTG.
1'-3" x 0'-9" DEEP FTG.
1'-3" x 0'-10" DEEP FTG.
1'-6" x 0'-9" DEEP FTG.
1'-6" x 1'-0" DEEP FTG.
1'-6" x 2'-0" DEEP FTG.
2'-0" x 1'-0" DEEP FTG.
4'-0" x 10" DEEP FTG.
5'-0" x 4" DEEP FTG.
5'-0" x 8" DEEP FTG.
5'-0" x 10" DEEP FTG.
5'-0" x 1'-0" DEEP FTG.
5'-0" x 1'-6" DEEP FTG.
5'-0" x 2'-0" DEEP FTG.
5'-0" x 2'-6" DEEP FTG.
5'-0" x 3'-0" DEEP FTG.
5'-0" x 3'-6" DEEP FTG.
5'-0" x 4'-0" DEEP FTG.
5'-0" x 5'-0" DEEP FTG.
5'-0" x 6'-0" DEEP FTG.
5'-0" x 7'-0" DEEP FTG.
5'-0" x 8'-0" DEEP FTG.
5'-0" x 9'-0" DEEP FTG.
5'-0" x 10'-0" DEEP FTG.
5'-0" x 11'-0" DEEP FTG.
5'-0" x

1/2" PLYWOOD SHEATHING ALL LOW ROOF AREA

LOW ROOF SLOPE

HIGH ROOF SLOPE

HIGH ROOF AREA

TRUSSED RAFTERS @24"O.C.

EDGE OF HIGH ROOF OVERHANG

HIGH POINT OF LOW ROOF

EDGE OF HIGH ROOF

HIGH POINT OF LOW ROOF

VALLEY

VALLEY

VALLEY LINE 7

LOW ROOF RIDGE LINE

LOW ROOF RIDGE

SLOPE

SLOPE

SLOPE

SLOPE

SLOPE

SLOPE

SLOPE

SLOPE

SLOPE

SLOPE

2-2x10" HIP

2-2x10" HIP

2-2x10" HIP

2-2x10" HIP

2-2x10" HIP

2-2x10" HIP

2-2x12

2-2x12

2-2x12

2-2x12

2-2x12

2-2x12

3-2x12

3-2x12

3

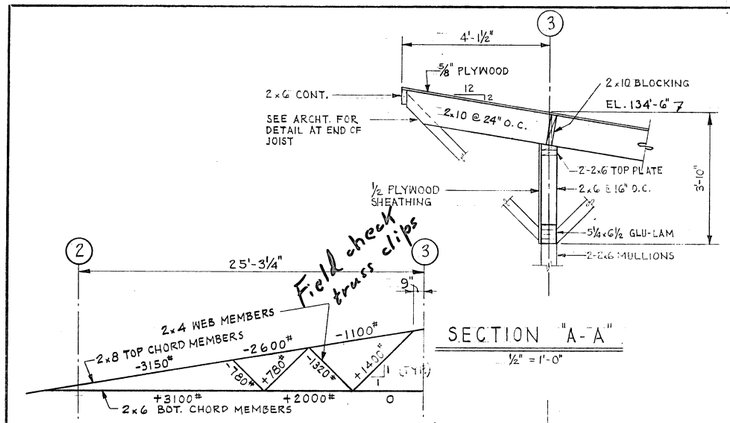

SECTION "A-A"

½" = 1'-0"

ALL JOINTS TO BE CONNECTED WITH TRUSS CLIP (OR EQUAL) FASTENERS. EACH FACE OF B'BOARDS. MIN. TRUSS CLIP CAPACITY SHALL BE EQUAL TO ½ CAPACITY OF FRAMING MEMBERS.

TRUSSES RAFTER DIAGRAM

NO SCALE

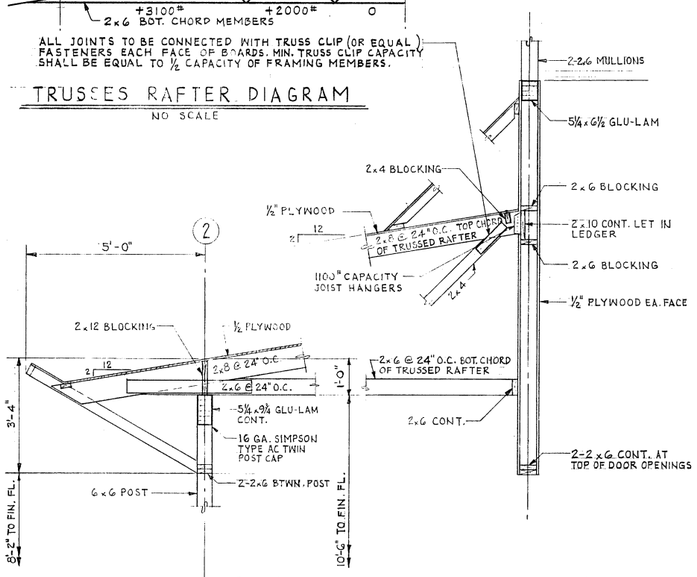

SECTION "C-C"

½" = 1'-0"

SECTION "B-B"

½" = 1'-0"

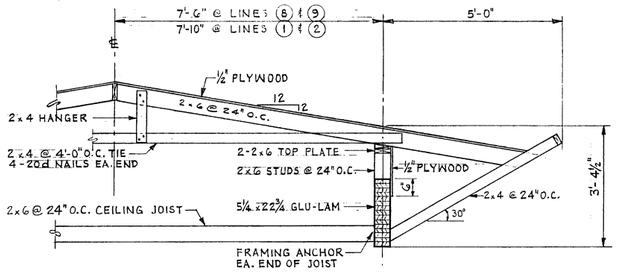

SECTION "D-D"

½" = 1'-0"

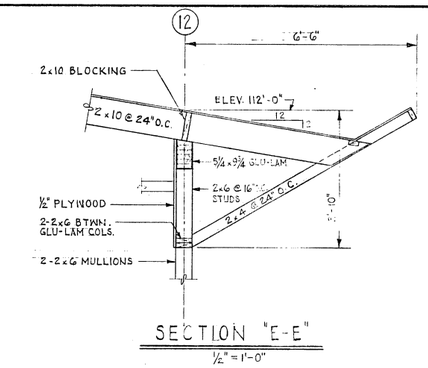

SECTION "E-E"

½" = 1'-0"

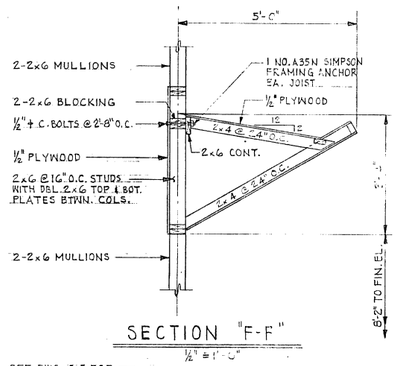

SECTION "F-F"

½" = 1'-0"

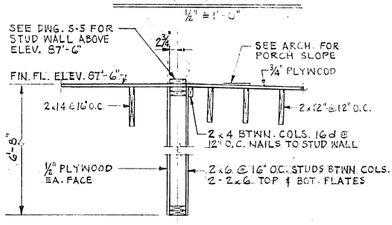

SECTION "G-G"

½" = 1'-0"

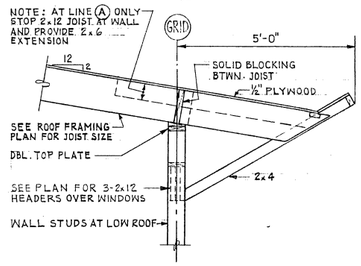

SECTION "H-H"

½" = 1'-0"

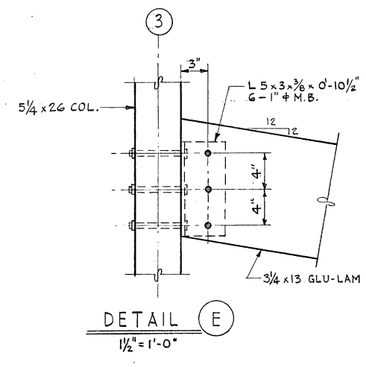

DETAIL (E)

1½" = 1'-0"

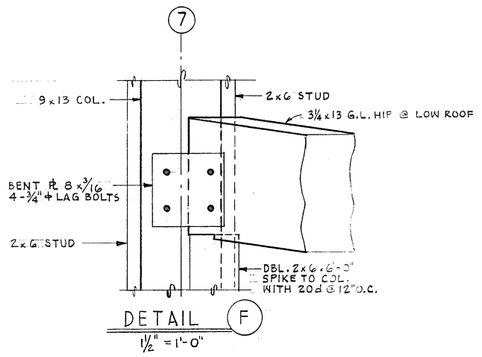

DETAIL (F)

1½" = 1'-0"

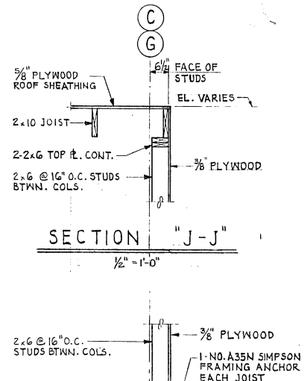

SECTION "J-J"

½" = 1'-0"

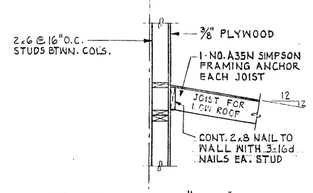

SECTION "K-K"

½" = 1'-0"

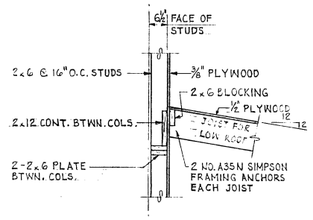

SECTION "L-L"

½" = 1'-0"

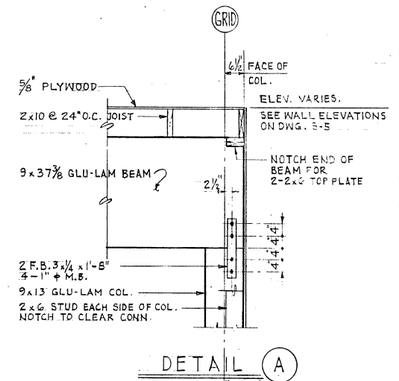

DETAIL (A)

½" = 1'-0"

DETAIL (B)

½" = 1'-0"

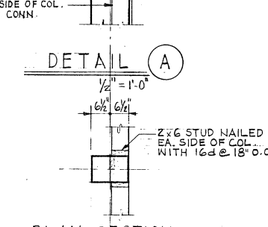

PLAN SECTION

½" = 1'-0"

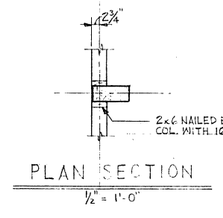

PLAN SECTION

½" = 1'-0"

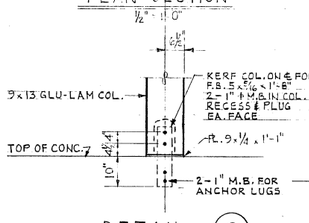

DETAIL (C)

½" = 1'-0"

TYP. ALL 9x13 GLU-LAM COLS.

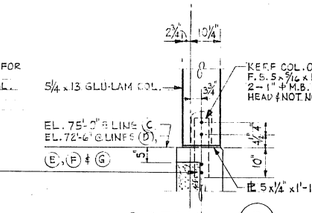

DETAIL (D)

½" = 1'-0"

TYP. ALL 5¼x13 COLS. ON LINE (12)

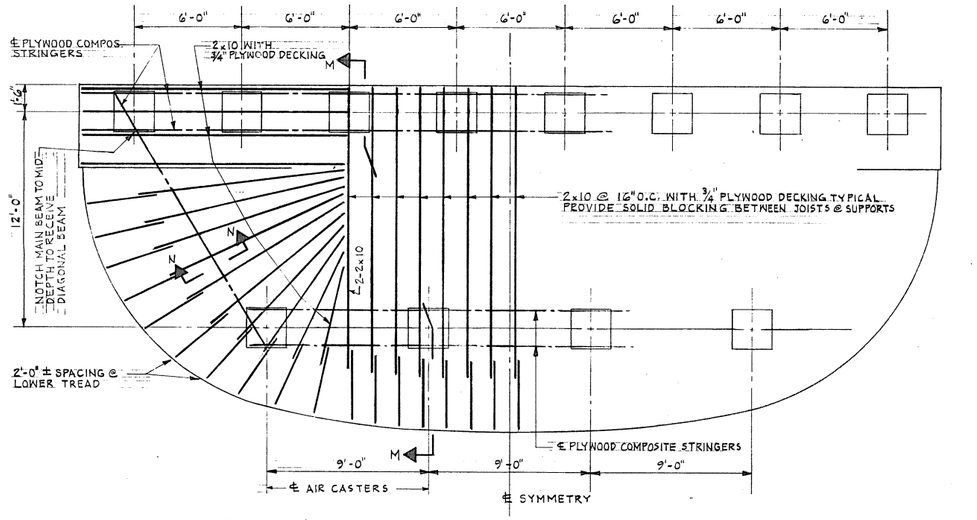

BIMA & ARK PLATFORM FRAMING PLAN

¼" = 1'-0"

NOTE: RECESS AIR CASTERS 2⅛" INTO BOTTOM OF PLYWOOD COMPOSITE STRINGERS

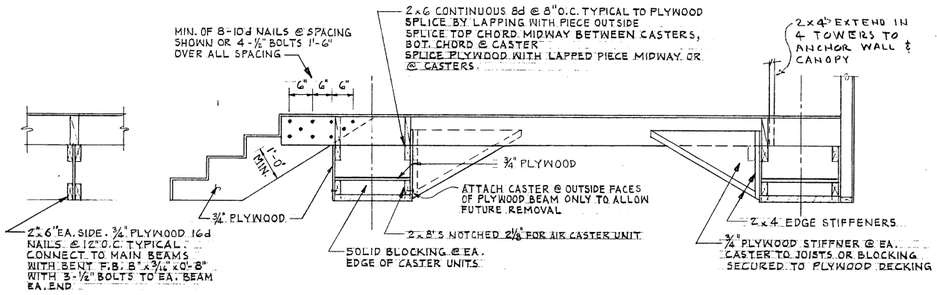

SECTION "N-N"
DIAGONAL BEAM

½" = 1'-0"

SECTION "M-M"
MAIN BEAMS & FRAMING

½" = 1'-0"

APPROVED BY

DATE

REVISIONS

DATE

DRAWN A-B-K

CHECKED RCN

DRAWING ROOF FRAMING DETAILS

TITLE SANCTUARY & SOCIAL CENTER FOR HERZL-NER-TAMID CONSERVATIVE CONGREGATION 3700 E MERCER WAY MERCER ISLAND WASHINGTON 98040

SHEET S-6

OF

JOB

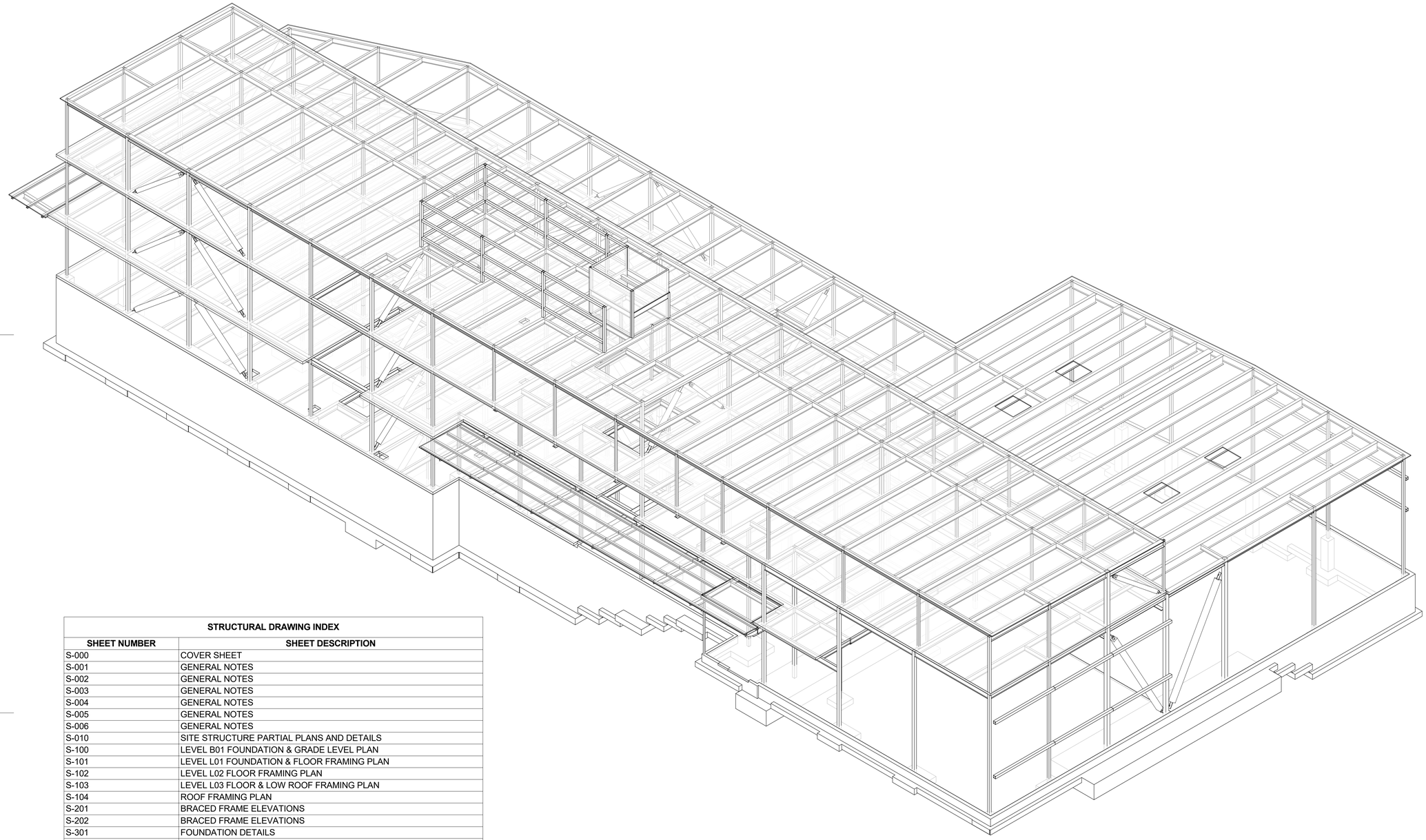

STRUCTURAL DRAWING INDEX	
SHEET NUMBER	**SHEET DESCRIPTION**
S-000	COVER SHEET
S-001	GENERAL NOTES
S-002	GENERAL NOTES
S-003	GENERAL NOTES
S-004	GENERAL NOTES
S-005	GENERAL NOTES
S-006	GENERAL NOTES
S-010	SITE STRUCTURE PARTIAL PLANS AND DETAILS
S-100	LEVEL B01 FOUNDATION & GRADE LEVEL PLAN
S-101	LEVEL L01 FOUNDATION & FLOOR FRAMING PLAN
S-102	LEVEL L02 FLOOR FRAMING PLAN
S-103	LEVEL L03 FLOOR & LOW ROOF FRAMING PLAN
S-104	ROOF FRAMING PLAN
S-201	BRACED FRAME ELEVATIONS
S-202	BRACED FRAME ELEVATIONS
S-301	FOUNDATION DETAILS
S-302	FOUNDATION DETAILS
S-303	FOUNDATION DETAILS
S-304	FOUNDATION DETAILS
S-305	FOUNDATION DETAILS
S-401	STEEL FRAMING DETAILS
S-402	STEEL FRAMING DETAILS
S-403	STEEL FRAMING DETAILS
S-404	STEEL FRAMING DETAILS
S-405	STEEL FRAMING DETAILS
S-406	STEEL FRAMING DETAILS
S-407	STEEL FRAMING DETAILS
S-408	STEEL FRAMING DETAILS
S-420	STEEL FRAMING DETAILS
S-421	STEEL FRAMING DETAILS
S-422	STEEL FRAMING DETAILS
S-423	STEEL FRAMING DETAILS
S-501	COLD-FORMED STEEL FRAMING DETAILS
S-502	COLD-FORMED STEEL FRAMING DETAILS
S-503	COLD-FORMED STEEL FRAMING DETAILS
S-504	COLD-FORMED STEEL FRAMING DETAILS
Grand total: 36	

12/15/2025 12:07:20 PM C:_Revit Models\23560 HNT Pk-12 R2024 (Central)_DanH-PCS.rvt
© ANJALI GRANT DESIGN LLC ORIGINAL SHEET SIZE: 24" X 36"

3427 BEACON AVE S
SEATTLE 98144
ANJALI@AGRANTDESIGN.COM
206-512-4209
anjali grant design LLC

PCS Structural Solutions
Seattle | Tacoma | Portland
www.pcs-structural.com

3700 E MERCER WAY
BARNABIE POINT PROJECT

NO.	DATE	DESCRIPTION

4 JUNE 2025
BUILDING PERMIT

PROJECT:

COVER SHEET

S-000

GENERAL NOTES

THESE GENERAL NOTES ARE TO BE USED AS A SUPPLEMENT TO THE SPECIFICATIONS. ANY DISCREPANCIES FOUND AMONG THE DRAWINGS, THE SPECIFICATIONS, THESE GENERAL NOTES AND THE SITE CONDITIONS SHALL BE REPORTED TO THE ARCHITECT, WHO SHALL CORRECT SUCH DISCREPANCY IN WRITING. ANY WORK DONE BY THE GENERAL CONTRACTOR AFTER DISCOVERY OF SUCH DISCREPANCY SHALL BE DONE AT THE GENERAL CONTRACTOR'S RISK. THE GENERAL CONTRACTOR SHALL VERIFY AND COORDINATE DIMENSIONS AMONG ALL DRAWINGS PRIOR TO PROCEEDING WITH ANY WORK OR FABRICATION. THE STRUCTURE HAS BEEN DESIGNED TO RESIST CODE SPECIFIED VERTICAL AND LATERAL FORCES AFTER THE CONSTRUCTION OF ALL STRUCTURAL ELEMENTS HAS BEEN COMPLETED. STABILITY OF THE STRUCTURE PRIOR TO COMPLETION IS THE SOLE RESPONSIBILITY OF THE GENERAL CONTRACTOR. THIS RESPONSIBILITY INCLUDES BUT IS NOT LIMITED TO JOB SITE SAFETY; ERECTION MEANS, METHODS, AND SEQUENCES; TEMPORARY SHORING, FORMWORK, BRACING; USE OF EQUIPMENT AND CONSTRUCTION PROCEDURES. PROVIDE ADEQUATE RESISTANCE TO LOADS ON THE STRUCTURES DURING CONSTRUCTION PER SEI/ASCE STANDARD NO. 37-14 "DESIGN LOADS ON STRUCTURES DURING CONSTRUCTION."

CONSTRUCTION OBSERVATION BY THE STRUCTURAL ENGINEER IS FOR GENERAL CONFORMANCE WITH DESIGN ASPECTS ONLY AND IS NOT INTENDED IN ANY WAY TO REVIEW THE CONTRACTOR'S CONSTRUCTION PROCEDURES.

STANDARDS
ALL METHODS, MATERIALS AND WORKMANSHIP SHALL CONFORM TO THE 2021 INTERNATIONAL BUILDING CODE (IBC) AS AMENDED AND ADOPTED BY THE LOCAL BUILDING OFFICIAL OR APPLICABLE JURISDICTION.

CONTRACT DRAWINGS / DIMENSIONS

ARCHITECTURAL DRAWINGS ARE THE PRIME CONTRACT DRAWINGS. CONSULTANT DRAWINGS BY OTHER DISCIPLINES ARE SUPPLEMENTARY TO ARCHITECTURAL DRAWINGS. REPORT DIMENSIONAL OMISSIONS OR DISCREPANCIES BETWEEN ARCHITECTURAL DRAWINGS AND STRUCTURAL, MECHANICAL, ELECTRICAL OR CIVIL DRAWINGS TO ARCHITECT PRIOR TO PROCEEDING WITH WORK.

STRUCTURAL DRAWINGS SHALL BE USED IN CONJUNCTION WITH ARCHITECTURAL DRAWINGS. PRIMARY STRUCTURAL ELEMENTS ARE DIMENSIONED ON STRUCTURAL PLANS AND DETAILS AND OVERALL LAYOUT OF STRUCTURAL PORTION OF WORK. SOME SECONDARY ELEMENTS ARE NOT DIMENSIONED, SUCH AS WALL CONFIGURATIONS, INCLUDING EXACT DOOR AND WINDOW LOCATIONS, ALCOVES, SLAB SLOPES AND DEPRESSIONS, CURBS, ETC. VERTICAL DIMENSIONAL CONTROL IS DEFINED BY ARCHITECTURAL WALL SECTIONS AND BUILDING SECTIONS. STRUCTURAL DETAILS SHOW DIMENSIONAL RELATIONSHIPS TO CONTROL DIMENSIONS DEFINED BY ARCHITECTURAL DRAWINGS. DETAILING AND SHOP DRAWING PRODUCTION FOR STRUCTURAL ELEMENTS WILL REQUIRE DIMENSIONAL INFORMATION CONTAINED IN **BOTH** ARCHITECTURAL AND STRUCTURAL DRAWINGS.

DESIGN CRITERIA

VERTICAL LOADS

AREA	DESIGN DEAD LOAD	LIVE LOAD (2)	PARTITION LOAD	CONCENTRATED LOADS
ROOF	15 PSF	30 PSF	--	300#
ROOF (SOLAR)	25 PSF (2)	30 PSF	--	300#
CLASSROOM	75 PSF	40 PSF	--	1,000#
MECHANICAL ROOM	75 PSF	40 PSF	+EQUIPMENT	
OFFICE	75 PSF	50 PSF	+15 PSF	2,000#
CORRIDORS (ABOVE 1ST FLR)	75 PSF	80 PSF	--	2,000#
CORRIDORS (1ST FLR)	75 PSF	100 PSF	--	2,000#
STAIRS	30 PSF	100 PSF	--	300#

(1) LIVE LOADS EXCEPT SNOW LOADS ARE REDUCED PER IBC SECTION 1607.12.
(2) INCLUDES 10 PSF FOR SOLAR READINESS.

SNOW: (MINIMUM ROOF SNOW LOAD = 25 PSF. ROOFS WITH SLOPES LESS THAN 5% INCLUDE 5 PSF ADDITIONAL RAIN ON SNOW LOAD SURCHARGE IN ADDITION TO THE DESIGN SNOW LOAD)

Pg = 16 PSF = GROUND SNOW LOAD
Pf = 0.7CeCtIsPg = FLAT ROOF SNOW LOAD
Ps = CsPf = SLOPED ROOF SNOW LOAD
Is = 1.1 Ce = 1.1, Ct = 1.1, Cs = VARIES

LATERAL FORCES

LATERAL FORCES ARE TRANSMITTED BY DIAPHRAGM ACTION OF ROOF AND FLOORS TO BRACED FRAME/SHEAR WALLS. LOADS ARE THEN TRANSFERRED TO FOUNDATION BY BRACED FRAME/SHEAR WALL ACTION WHERE ULTIMATE DISPLACEMENT IS RESISTED BY PASSIVE PRESSURE OF EARTH AND/OR SLIDING FRICTION. OVERTURNING IS RESISTED BY DEAD LOAD OF THE STRUCTURE.

LATERAL FORCE RESISTING SYSTEM: ALL MEMBERS AND CONNECTIONS REFERRED TO AS LATERAL FORCE RESISTING SYSTEM (LFRS) SHALL COMPLY WITH REQUIREMENTS OF THE SEISMIC FORCE RESISTING SYSTEM AND THE WIND FORCE RESISTING SYSTEM SET FORTH IN THE SPECIAL INSPECTION REQUIREMENTS OF IBC SECTION 1704 AND 1705, AND AS NOTED IN THE STATEMENT OF SPECIAL INSPECTIONS.

WIND:

THE BUILDING MEETS THE CRITERIA TO USE THE "ENCLOSED, PARTIALLY ENCLOSED, AND OPEN BUILDING OF ALL HEIGHTS PROCEDURE" PER ASCE 7-16.

- EXPOSURE CATEGORY = C
- BASIC WIND SPEED, (3 SEC. GUST), V_{ULT} = 105 MPH; V_{ASD} = 85 MPH
- RISK CATEGORY PER IBC TABLE 1604.5 = III
- TOPOGRAPHIC FACTOR K_{ZT} = 1.32
- INTERNAL PRESSURE COEFFICIENT (ENCLOSED) = ± 0.18
- COMPONENTS AND CLADDING LOADS, SEE SHEET S-005

SEISMIC: (ASCE 7-16) V = CsW

WHERE $Cs = \frac{S_{DS}}{(\frac{R}{Ie})}$; WITH

Cs MINIMUM = 0.044 $S_{DS}Ie \geq 0.01$
OR
Cs MINIMUM = $\frac{0.5S_1}{\frac{R}{Ie}}$ FOR $S_1 > 0.6g$

Cs MAXIMUM = $\frac{S_{D1}}{T(\frac{R}{Ie})}$ FOR $T \leq T_L$
OR
Cs MAXIMUM = $\frac{S_{D1}T_L}{T^2(\frac{R}{Ie})}$ FOR $T > T_L$

SEISMIC IMPORTANCE FACTOR, Ie = 1.25
RISK CATEGORY OF BUILDING PER IBC TABLE 1604.5 = III
SPECTRAL RESPONSE ACCELERATIONS S_S = 1.397 & S_1 = 0.486
SITE CLASS PER TABLE 20.3-1 = D
DESIGN SPECTRAL RESPONSE ACCELERATIONS S_{DS} = 0.931 & S_{D1} = 0.590
SEISMIC DESIGN CATEGORY = D
W = EFFECTIVE SEISMIC WEIGHT OF BUILDING = 2820 KIPS
ANALYSIS PROCEDURE USED = MODALRESPONSE SPECTRUM ANALYSIS
SEISMIC FORCE-RESISTING SYSTEM PER TABLE 12.2-1:

ABOVE FLOOR LEVEL 1:
STEEL BUCKLING RESTRAINED BRACE FRAMES
RESPONSE MODIFICATION FACTOR, R = 8
OVERSTRENGTH FACTOR, Ω = 2 1/2
DEFLECTION AMPLIFICATION FACTOR, Cd = 5
Cs = 0.146
DESIGN BASE SHEAR V = 410 KIPS
REDUNDANCY FACTOR PER 12.3.4, ρ = 1.3

FLOOR LEVEL 1 AND BELOW:
STEEL BUCKLING RESTRAINED BRACE FRAMES AND SPECIAL REINFORCED CONCRETE SHEAR WALLS
RESPONSE MODIFICATION FACTOR, R = 5
OVERSTRENGTH FACTOR, Ω = 2 1/2
DEFLECTION AMPLIFICATION FACTOR, Cd = 5
Cs = 0.234
DESIGN BASE SHEAR V = 660 KIPS
REDUNDANCY FACTOR PER 12.3.4, ρ = 1.3
PIPES, DUCTS AND MECHANICAL EQUIPMENT SUPPORTED OR BRACED FROM STRUCTURE SHALL CONFORM TO SHEET METAL AND AIR CONDITIONING CONTRACTORS' NATIONAL ASSOCIATION, INC. PUBLICATION "SEISMIC RESTRAINT MANUAL: GUIDELINES FOR MECHANICAL SYSTEMS". SPRINKLER LINE ATTACHMENTS SHALL CONFORM TO NFPA PAMPHLET 13.

FOUNDATION DESIGN CRITERIA ("SUBSURFACE EXPLORATION, GEOLOGIC HAZARD, AND GEOTECHNICAL ENGINEERING REPORT - HERZL-NER TAMID CONSERVATIVE CONGREGATION K-8 EXPANSION" BY ASSOCIATED EARTH SCIENCES, DECEMBER 2024).

ALLOWABLE SOIL BEARING PRESSURE: 3000 PSF

ACTIVE PRESSURE - RESTRAINED: 55 PCF +15H SEISMIC SURCHARGE
ACTIVE PRESSURE - UNRESTRAINED: 35 PCF +10H SEISMIC SURCHARGE
PASSIVE RESISTANCE: 300 PCF (INCLUDES F.O.S. ≥ 1.5)
COEFFICIENT OF FRICTION: .30 (INCLUDES F.O.S. ≥ 1.5)
*1/3 INCREASE ALLOWED FOR SEISMIC OR WIND LOADING
STATIC DIFFERENTIAL SETTLEMENT: 1/2" MAX OVER 50 FEET PER GEO-TECHNICAL REPORT.

ALL FOOTINGS SHALL BEAR ON FIRM, UNDISTURBED EARTH OR "STRUCTURAL BACKFILL". NATIVE EARTH BEARING SHALL BE SURFACE COMPACTED. AREAS OVER-EXCAVATED SHALL BE BACKFILLED WITH LEAN CONCRETE (f'c= 2000 PSI) OR "STRUCTURAL BACKFILL". AREAS DESIGNATED "STRUCTURAL BACKFILL" SHALL BE FILLED WITH APPROVED WELL-GRADED BANKRUN MATERIAL. MAXIMUM SIZE OF ROCK 4". FROZEN SOIL, ORGANIC MATERIAL AND DELETERIOUS MATTER NOT ALLOWED. COMPACT TO AT LEAST 95% OF ITS MAXIMUM DENSITY AS DETERMINED BY ASTM D1557. CONTRACTOR SHALL EXERCISE EXTREME CARE DURING EXCAVATION TO AVOID DAMAGE TO BURIED LINES, TANKS, AND OTHER CONCEALED ITEMS. UPON DISCOVERY, DO NOT PROCEED WITH WORK UNTIL RECEIVING WRITTEN INSTRUCTIONS FROM ARCHITECT. A COMPETENT REPRESENTATIVE OF THE OWNER SHALL INSPECT ALL FOOTING EXCAVATIONS FOR SUITABILITY OF BEARING SURFACES PRIOR TO PLACEMENT OF REINFORCING STEEL. PROVIDE DRAINAGE AND DEWATERING AROUND ALL WORK TO AVOID WATER-SOFTENED FOOTINGS.

FREE DRAINING BACKFILL MATERIAL FOR RETAINING & BASEMENT WALLS

A CLEAN, FREE DRAINING, WELL GRADED GRANULAR MATERIAL CONFORMING TO ASTM D2487 GW OR SW WHOSE MAXIMUM PARTICLE SIZE DOES NOT EXCEED 3/4" AND WHOSE FINES CONTENT (MATERIAL PASSING THE NO. 200 SIEVE) DOES NOT EXCEED 5%,

WITH A MAXIMUM DUST RATIO $\frac{\text{\% PASSING U.S. NO. 200 SIEVE}}{\text{\% PASSING U.S. NO. 40 SIEVE}}$ = 2/3 MAX.

CONCRETE

CAST-IN-PLACE CONCRETE

CODES, SPECIFICATIONS, AND STANDARDS. CONCRETE WORK SHALL CONFORM TO THE FOLLOWING CODES, SPECIFICATIONS, AND STANDARDS, AND THE STANDARDS AND SPECIFICATIONS THEY REFERENCE. THE CONTRACTOR SHALL OBTAIN AND HAVE READILY AVAILABLE ON SITE THE LATEST VERSION OF THE "ACI MANUAL OF CONCRETE PRACTICE":

ACI:
1. ACI-117 'SPECIFICATIONS FOR TOLERANCES FOR CONCRETE CONSTRUCTION AND MATERIALS AND COMMENTARY'.
2. ACI-301 'SPECIFICATIONS FOR CONCRETE CONSTRUCTION'.
3. ACI-302.1 'GUIDE TO CONCRETE FLOOR AND SLAB CONSTRUCTION'.
4. ACI-304 'GUIDE FOR MEASURING, MIXING, TRANSPORTING, AND PLACING CONCRETE'.
5. ACI-305.1 'SPECIFICATIONS FOR HOT WEATHER CONCRETING'.
6. ACI-306.1 'STANDARD SPECIFICATION FOR COLD WEATHER CONCRETING'.
7. ACI-308.1 'STANDARD SPECIFICATION FOR CURING CONCRETE'.
8. ACI-309 'GUIDE FOR CONSOLIDATION OF CONCRETE'.
9. ACI-311.4 'GUIDE FOR CONCRETE INSPECTION'.
10. ACI-315 'GUIDE TO PRESENTING REINFORCING STEEL DESIGN DETAILS'.
11. ACI-318 'BUILDING CODE REQUIREMENTS FOR STRUCTURAL CONCRETE'.
12. ACI-506.2 'SPECIFICATION FOR SHOTCRETE'.
13. ACI 347 'GUIDE TO FORMWORK FOR CONCRETE'.
14. ACI 303 'GUIDE TO CAST-IN-PLACE ARCHITECTURAL CONCRETE PRACTICE'.

ASTM:
1. ASTM C33 'STANDARD SPECIFICATION FOR CONCRETE AGGREGATES'.
2. ASTM C94 'STANDARD SPECIFICATION FOR READY-MIX CONCRETE'.
3. ASTM C150 'STANDARD SPECIFICATION FOR PORTLAND CEMENT'.
4. ASTM C260 'STANDARD SPECIFICATION FOR AIR-ENTRAINED ADMIXTURES FOR CONCRETE'.
5. ASTM C309 'STANDARD SPECIFICATION FOR LIQUID MEMBRANE-FORMING COMPOUNDS FOR CURING CONCRETE'.
6. ASTM C494 'STANDARD SPECIFICATION FOR CHEMICAL ADMIXTURES FOR CONCRETE'.
7. ASTM C595 'STANDARD SPECIFICATION FOR BLENDED HYDRAULIC CEMENTS'.
8. ASTM C618 'STANDARD SPECIFICATION FOR ... COAL-ASH...'.
9. ASTM C989 'STANDARD SPECIFICATION FOR SLAG...'.
10. ASTM C1017 'STANDARD SPECIFICATION FOR CHEMICAL ADMIXTURES FOR USE IN PRODUCING FLOWING CONCRETE'.
11. ASTM C1116 'STANDARD SPECIFICATION FOR FIBER-REINFORCED CONCRETE'.
12. ASTM C1218 'STANDARD TEST METHOD FOR WATER-SOLUBLE CHLORIDE IN MORTAR AND CONCRETE'.
13. ASTM C1315 'STANDARD SPECIFICATION FOR LIQUID MEMBRANE-FORMING COMPOUNDS HAVING SPECIAL PROPERTIES FOR CURING AND SEALING CONCRETE'

MIX DESIGNS: THE CONTRACTOR SHALL DESIGN CONCRETE MIXES THAT MEET OR EXCEED THE REQUIREMENTS OF THE CONCRETE MIX TABLE. ALL CONCRETE MIXES SHALL BE NORMAL WEIGHT, UNLESS NOTED OTHERWISE. THE MIX DESIGNS SHALL FACILITATE ANTICIPATED PLACEMENT METHODS, WEATHER, REBAR CONGESTION, ARCHITECTURAL FINISHES, CONSTRUCTION SEQUENCING, STRUCTURAL DETAILS, AND ALL OTHER FACTORS REQUIRED TO PROVIDE A STRUCTURALLY SOUND, AESTHETICALLY ACCEPTABLE FINISHED PRODUCT. WATER REDUCING ADMIXTURES WILL LIKELY BE REQUIRED TO MEET THESE REQUIREMENTS. CONCRETE MIX DESIGNS SHALL CLEARLY INDICATE THE TARGET SLUMP. SLUMP TOLERANCE SHALL BE ± 1-1/2 INCHES.

AGGREGATE: COARSE AND FINE AGGREGATE SHALL CONFORM TO ASTM C33

CEMENT: CEMENT SHALL CONFORM TO ASTM C150, TYPE II PORTLAND CEMENT OR ASTM C595 - TYPE IL PORTLAND LIMESTONE CEMENT, UNLESS NOTED OTHERWISE. CEMENT IN CONCRETE EXPOSED TO EARTH SHALL BE TYPE II OR TYPE IL-MS.

FLYASH: SHALL CONFORM TO ASTM C618 CLASS C OR F, MAXIMUM LOSS OF IGNITION SHALL BE 1.0%.

SLAG: GROUND GRANULATED BLAST-FURNACE (GGBF) SLAG SHALL CONFORM TO ASTM C989 GRADE 100 OR 120.

ALTERNATE MIX DESIGNS: VARIATIONS TO THE MIX DESIGN PROPORTIONS MAY BE ACCEPTED IF SUBSTANTIATED IN ACCORDANCE WITH ACI 318, CHAPTER 19. PROVIDE SUBMITTALS A MINIMUM OF TWO WEEKS PRIOR TO BID FOR DETERMINATION OF ACCEPTABILITY.

ADMIXTURES: ADMIXTURES SHALL BE BY MASTER BUILDERS, W.R. GRACE, OR PRE-APPROVED EQUAL. ALL MANUFACTURER'S RECOMMENDATIONS SHALL BE FOLLOWED.

WATER: SHALL BE CLEAN AND POTABLE.

MAXIMUM CHLORIDE CONTENT: THE MAXIMUM WATER SOLUBLE CHLORIDE CONTENT SHALL NOT EXCEED 0.15% BY WEIGHT OF CEMENTITIOUS MATERIAL UNLESS NOTED OTHERWISE.

CONCRETE EXPOSED TO WEATHER: PROVIDE 5.0% TOTAL AIR CONTENT FOR ALL CONCRETE EXPOSED TO WEATHER. TOTAL AIR CONTENT IS THE SUM OF ENTRAINED AIR PROVIDED BY ADMIXTURES AND NATURALLY OCCURRING ENTRAPPED AIR. AIR CONTENT SHALL BE TESTED PRIOR TO BEING PLACED IN THE PUMP HOPPER OR BUCKET; IT IS NOT REQUIRED TO BE TESTED AT THE DISCHARGE END OF THE PUMP HOSE. THE TOLERANCE ON ENTRAPPED AIR SHALL BE +2.0% AND -1.5% WITH THE AVERAGE OF ALL TESTS NOT LESS THAN THE SPECIFIED AMOUNT.

TOTAL CEMENTITIOUS MATERIAL: THE SUM OF ALL CEMENT PLUS FLYASH AND SLAG. AT THE CONTRACTORS OPTION FLYASH OR SLAG MAY BE SUBSTITUTED FOR CEMENT BUT SHALL NOT EXCEED 25% BY WEIGHT OF TOTAL CEMENTITIOUS MATERIAL. IN NO CASE SHALL THE AMOUNT OF FLYASH OR SLAG BE LESS THAN REQUIRED BY THE CONCRETE MIX DESIGN TABLE. FOOTING MIXES SHALL CONTAIN NOT LESS THAN **5 SACKS** OF CEMENTITIOUS MATERIAL PER CUBIC YARD, ALL OTHER MIXES SHALL CONTAIN NOT LESS THAN **5-1/2 SACKS** OF CEMENTITIOUS MATERIAL PER CUBIC YARD, UNLESS NOTED OTHERWISE.

ITEM	DESIGN f'c (PSI) (AT 28 DAYS U.N.O.)	MAX. W/C RATIO	MIN. FLYASH OR SLAG (PCY)	AGGREGATE GRADING ASTM AASHTO	NOTES
SLABS ON GRADE - UNO	4000	0.45	100	57 OR 67	
ARCHITECTURALLY EXPOSED SLABS ON GRADE	4000	0.45	100	57 OR 67	1, 2
FOUNDATIONS - UNO	3000	0.50	--	57 OR 67	
STEM WALLS AND OTHER WALLS EXPOSED TO EARTH OR WEATHER	4500	0.45	100	57 OR 67	
STEM WALLS AND OTHER WALLS - UNO	4000	0.50	100	57 OR 67	
ARCHITECTURALLY EXPOSED ELEVATED DECKS, TOPPING SLABS, AND SLABS ON METAL DECK	5000	0.40	100	57 OR 67	
ELEVATED DECKS, TOPPING SLABS, AND SLABS ON METAL DECK - UNO	4000	0.45	--	57 OR 67	
COLUMNS AND SHEAR WALLS	4000	0.50	--	7 OR 8	
CONTROLLED DENSITY FILL (CDF)	200	--	--	SAND	3
ALL OTHER CONCRETE	4000	0.50	--	57 OR 67	

CONCRETE MIX NOTES:

1. MAXIMUM WATER CONTENT 240 PCY.
2. THIS MIX SHALL CONTAIN 1 GALLON PER CY OF "ECLIPSE FLOOR 200" SHRINKAGE REDUCING ADMIXTURE BY GCP APPLIED TECHNOLOGIES, MASTER BUILDERS MASTERLIFE CRA 007 OR APPROVED ALTERNATE. FOR CONCRETE REQUIRING AN AIR ENTRAINMENT ADMIXTURE, GCP "ECLIPSE 4500" OR MASTERLIFE "SRA 035" SHALL BE USED.
3. SAND - CEMENT CONCRETE GROUT.

CONCRETE PLACEMENT

PLACE CONCRETE FOLLOWING ALL APPLICABLE ACI RECOMMENDATIONS. CONCRETE SHALL BE PROPERLY CONSOLIDATED PER ACI 309 USING INTERIOR MECHANICAL VIBRATORS. DO NOT OVER-VIBRATE. CONCRETE SHALL BE POURED MONOLITHICALLY BETWEEN CONSTRUCTION OR EXPANSION JOINTS. IF CONCRETE IS PLACED BY THE PUMP METHOD, HORSES SHALL BE PROVIDED TO SUPPORT THE HOSE, THE HOSE SHALL NOT BE ALLOWED TO RIDE ON THE REINFORCING. WEATHER FORECASTS SHALL BE MONITORED AND ACI RECOMMENDATIONS FOR HOT AND COLD WEATHER CONCRETING SHALL BE FOLLOWED AS REQUIRED. CONCRETE SHALL NOT FREE FALL MORE THAN 5 FEET DURING PLACEMENT WITHOUT WRITTEN APPROVAL OF STRUCTURAL ENGINEER.

3427 BEACON AVE S
SEATTLE 98144
ANJALI@AGRANTDESIGN.COM
206-512-4209
anjali grant design LLC

PCS Structural Solutions
Seattle | Tacoma | Portland
www.pcs-structural.com

3700 E MERCER WAY
BARNABIE POINT PROJECT

NO.	DATE	DESCRIPTION
01	10/22/2025	BLDG PERMIT CORRECTIONS

4 JUNE 2025
BUILDING PERMIT

PROJECT:

GENERAL NOTES

S-001

12/15/2025 12:07:23 PM C:\...\Revit Models\23580 HNT Pk-12 R2024 [Central]_DanH.PCS.rvt
© ANJALI GRANT DESIGN LLC ORIGINAL SHEET SIZE: 24" X 36"

FLOATING & FINISHING OPERATIONS

WATER SHALL NOT BE ADDED TO THE CONCRETE SURFACE DURING FLOATING & FINISHING OPERATIONS. PRE-APPROVED EVAPORATION RETARDER SPECIFICALLY DESIGNED FOR FLOATING & FINISHING OPERATIONS ARE ACCEPTABLE.

FORMED SURFACES:

FORMWORK CLASS OF SURFACE PER ACI 347 TABLE 5.3.1	
ITEM	CLASS OF FINISH
ALL SURFACES EXPOSED TO PUBLIC VIEW, U.N.O.	A
ALL SURFACES RECEIVING A COURSE TEXTURED COATING SUCH AS PLASTER OR STUCCO, UNLESS NOTED OTHERWISE	B
ALL OTHER SURFACES, UNLESS NOTED OTHERWISE	C

FORMWORK STRIPPING:

COLUMNS & WALLS: COLUMNS AND WALLS NOT SUPPORTING FRAMING WEIGHT MAY BE STRIPPED AS SOON AS FORMS CAN BE REMOVED WITHOUT DAMAGING THE CONCRETE AND THE CONCRETE HAS REACHED A MINIMUM COMPRESSIVE STRENGTH OF 500 PSI.

COLD WEATHER PLACEMENT:

1. COLD WEATHER IS DEFINED BY ACI 306 AS "A PERIOD WHEN FOR MORE THAN 3 SUCCESSIVE DAYS THE MEAN DAILY TEMPERATURE DROPS BELOW 40° F."
2. NO CONCRETE SHALL BE PLACED ON FROZEN OR PARTIALLY FROZEN GROUND. THAWING THE GROUND WITH HEATERS IS PERMISSIBLE.
3. CONCRETE MIX TEMPERATURES SHALL BE AS SHOWN BELOW. HEATING OF WATER AND/OR AGGREGATES MAY BE REQUIRED TO ATTAIN THESE TEMPERATURES.
4. THE CONCRETE MAY REQUIRE PROTECTION FOR 4-7 DAYS AFTER POURING. IF TEMPERATURES REMAIN BELOW FREEZING, INSULATING BLANKET COVERAGE IS REQUIRED. IF TEMPERATURES ARE SLIGHTLY BELOW FREEZING (30° F MIN.) AT NIGHT AND ABOVE FREEZING DURING THE DAY, KRAFT PAPER WITH COMPLETE COVERAGE MAY BE USED IN LIEU OF INSULATED BLANKETS.
5. NO ADDITIVES CONTAINING CHLORIDES SHALL BE USED. USE "POZZUTEC 20+" BY MASTER BUILDERS OR "POLARSET" BY W.R. GRACE OR PRE-APPROVED EQUAL.

CONDITION OF PLACEMENT AND CURING		WALLS & SLABS	FOOTINGS
MIN. TEMP. FRESH CONCRETE AS MIXED FOR WEATHER INDICATED, DEGREES F.	ABOVE 30° F. 0° TO 30° F. BELOW 0° F.	60° 65° 70°	55° 60° 65°
MIN. TEMP. FRESH CONCRETE AS PLACED AND MAINTAINED, DEGREES F.		55°	50°
MAX. ALLOWABLE GRADUAL DROP IN TEMP. THROUGHOUT FIRST 24 HOURS AFTER END OF PROTECTION, DEGREES F.		50°	40°

HOT OR WINDY WEATHER PLACEMENT

HOT WEATHER IS DEFINED BY ACI 305 AS "ANY COMBINATION OF HIGH AIR TEMPERATURE, LOW RELATIVE HUMIDITY, AND WIND VELOCITY, TENDING TO IMPAIR THE QUALITY OF FRESH HARDENED CONCRETE. ACI 305 FIGURE 2.1.5 SHALL BE USED BY THE CONTRACTOR TO ESTIMATE THE RATE OF EVAPORATION. WHEN THE ESTIMATED RATE OF EVAPORATION IS GREATER THAN O.2 PSF/HOUR THE PLACEMENT SHALL BE CONSIDERED A HOT WEATHER PLACEMENT. PRECAUTIONS AGAINST PLASTIC SHRINKAGE CRACKING ARE NECESSARY. PRECAUTIONS TAKEN BY THE CONTRACTOR VARY DEPENDING UPON THE FACTORS ASSOCIATED WITH WATER EVAPORATION AND INCLUDE BUT ARE NOT LIMITED TO:

1. LIMITING CONCRETE TEMPERATURE TO 100°F AT TIME OF PLACEMENT.

2. APPLICATION OF AN EVAPORATION RETARDER.

3. USE OF FOG SPRAY.

4. REDUCTION OF POUR SIZE.

5. PLACING CONCRETE AT NIGHT.

CONTROL AND CONSTRUCTION JOINTS

CONSTRUCTION JOINTS SHALL MEET THE REQUIREMENTS OF ACI 301 SECTIONS 2.2.2.5 AND 5.3.2.6. SPECIAL BONDING METHODS PER SECTION 5.3.2.6 SHALL BE SATISFIED BY ITEM 6 BELOW UNLESS OTHERWISE DETAILED ON THE STRUCTURAL DRAWINGS. WHERE CONSTRUCTION JOINTS ARE NOT SHOWN ON PLAN OR ADDITIONAL CONSTRUCTION JOINTS ARE REQUIRED SUBMIT PROPOSED JOINTING FOR STRUCTURAL ENGINEERS APPROVAL. PROVIDE CONSTRUCTION JOINTS AS INDICATED BELOW UNLESS NOTED OTHERWISE ON THE PLANS:

1. SLABS ON GRADE: PROVIDE CONSTRUCTION AND/OR CONTROL JOINTS AT 16 FEET O.C. MAXIMUM FOR UNEXPOSED SLABS ON GRADE AND 12 FEET O.C. FOR EXPOSED SLABS ON GRADE. COORDINATE JOINTS WITH ARCHITECTURAL DRAWINGS.
2. WALLS AND COLUMNS: COORDINATE CONSTRUCTION JOINTS WITH ARCHITECTURAL REVEALS.
3. BONDING AGENT: WHERE BONDING AGENT IS SPECIFICALLY CALLED OUT ON THE STRUCTURAL DRAWINGS USE "WELD CRETE" BY LARSEN PRODUCTS CORPORATION OR PRE-APPROVED EQUAL. FOLLOW ALL MANUFACTURERS RECOMMENDATIONS.
4. ATTACHMENT OF NEW CONCRETE TO EXISTING: WHERE SHOWN, ROUGHEN CONCRETE TO A MINIMUM AMPLITUDE OF 1/4" USING IMPACT HAMMER. REMOVE ALL LOOSE OR DAMAGED CONCRETE, THOROUGHLY FLUSH ALL SURFACES WITH POTABLE WATER, AIR BLAST WITH OIL FREE COMPRESSED AIR TO REMOVE ALL WATER.
5. SLAB ON METAL DECK: SHALL NOT BE SAW CUT UNLESS SPECIFICALLY CALLED OUT ON DRAWINGS.

EMBEDDED ITEMS

1. NO ALUMINUM ITEMS SHALL BE EMBEDDED IN ANY CONCRETE.
2. ALL EMBED PLATES SHALL BE SECURELY FASTENED IN PLACE.
3. ALL EMBEDDED STEEL ITEMS EXPOSED TO EARTH SHALL BE GALVANIZED.
4. ALL EMBEDDED STEEL ITEMS EXPOSED TO WEATHER SHALL BE PAINTED UNLESS NOTED AS GALVANIZED. SEE DRAWINGS AND SPECIFICATIONS FOR PAINT, PRIMER, AND GALVANIZING REQUIREMENTS.
5. EMBEDDED CONDUIT IS NOT PERMITTED IN CONCRETE SLABS ON METAL DECK UNLESS SPECIFICALLY NOTED ON THE STRUCTURAL DRAWINGS.
6. EMBEDDED FLEXIBLE CONDUIT IS PERMITTED IN OTHER CAST IN PLACE CONCRETE SLABS WITH A THICKNESS GREATER OR EQUAL TO 5-1/2 INCHES. WHERE PERMITTED IT MAY BE PLACED ON TOP OF THE BOTTOM MAT OF REINFORCING. THE OUTSIDE DIAMETER OF THE CONDUIT SHALL NOT BE GREATER THAN 1-INCH. A MINIMUM OF 2-INCHES CLEAR SHALL BE PROVIDED BETWEEN CONDUIT AND PARALLEL REINFORCING. SPACE CONDUITS A MINIMUM OF 12-INCHES APART, WHERE THIS IS NOT POSSIBLE NOTIFY ENGINEER FOR ADDITIONAL REINFORCING REQUIREMENTS.

CONCRETE CURING AND SEALING

CURING PROCEDURES SHALL COMMENCE IMMEDIATELY AFTER FINISHING CONCRETE TO MAINTAIN CONCRETE IN A MOIST CONDITION. VERIFY CURING AND/OR SEALING PRODUCTS ARE COMPATIBLE WITH FLOOR COVERINGS SHOWN ON THE ARCHITECTURAL DRAWINGS. FOLLOW ALL MANUFACTURER'S RECOMMENDATIONS. SLABS ARE DEFINED AS SLABS ON GRADE, CONCRETE ON METAL DECK, ELEVATED POST-TENSIONED OR MILD REINFORCED DECKS, AND TOPPING SLABS.

ITEM	CONCRETE CURING NOTES
SLABS EXPOSED TO EARTH OR WEATHER OR VEHICLE OR FORKLIFT TRAFFIC INCLUDING LOADING DOCKS	1, (3 OR 4 OR 5), 6
ALL OTHER SLABS	1, (3 OR 4 OR 5)
FORMED SURFACES EXCLUDING FOUNDATIONS	2
SHOTCRETE WALLS	4
ALL OTHER CONCRETE	NONE

CONCRETE CURING NOTES:

1. WHEN THE ESTIMATED EVAPORATION RATE IS GREATER THAN 0.2 PSF/HOUR PROVIDE A SPRAY APPLIED EVAPORATION RETARDER IMMEDIATELY AFTER CONCRETE PLACEMENT. THE EVAPORATION RATE MAY BE CALCULATED PER ACI 305 FIGURE 2.1.5.
2. APPLY A LIQUID MEMBRANE FORMING CURING COMPOUND, CONFORMING TO ASTM C309 TYPE 1 CLASS B SPECIFICATIONS, PER MANUFACTURER'S RECOMMENDATIONS TO ALL FORMED SURFACES IMMEDIATELY AFTER FINAL FORM REMOVAL. NOT REQUIRED IF FORMWORK REMAINS IN PLACE FOR MORE THAN 7 DAYS.
3. PROVIDE PRE-APPROVED CONTINUOUS WET CURE METHOD FOR A MINIMUM OF 14 DAYS.
4. APPLY A LIQUID MEMBRANE FORMING CURING COMPOUND, CONFORMING TO ASTM C309 TYPE 1 CLASS B SPECIFICATIONS OR ASTM C1315 TYPE 1 CLASS A SPECIFICATIONS, PER MANUFACTURER'S RECOMMENDATIONS IMMEDIATELY AFTER FINAL FINISHING. CURING COMPOUND SHALL BE COMPATIBLE WITH ARCHITECTURAL FLOOR COVERINGS AND SEALERS.
5. PROVIDE "ULTRACURE DOT" MOISTURE RETAINING COVER BY MCTECH GROUP, OR APPROVED EQUAL, FOR A MINIMUM OF 14 DAYS.
6. APPLY A SILANE SEALER WITH MINIMUM SOLIDS CONTENT OF 40% PER MANUFACTURER'S RECOMMENDATIONS.

GROUT

NON-SHRINK GROUT: MASTER BUILDERS "MASTERFLOW 928" OR PRE-APPROVED EQUAL. GROUT SHALL CONFORM TO CRD-C621 AND ASTM C1107 WHEN TESTED AT A FLUID CONSISTENCY PER CRD-C611-85 FOR 30 MINUTES. GROUT MAY BE PLACED FROM A 25 SECOND FLOW TO A STIFF PACKING CONSISTENCY. FILL OR PACK ENTIRE SPACE UNDER PLATES OR SHAPES. FOLLOW MANUFACTURER'S RECOMMENDATIONS FOR PREPARATION, INSTALLATION, AND CURING. 28-DAY MINIMUM STRENGTH SHALL BE 7,500 PSI MINIMUM

REINFORCING STEEL

REINFORCING STEEL SHALL CONFORM TO:

ASTM A615, GRADE 60 TYPICAL UNLESS NOTED OTHERWISE.

ASTM A615 GRADE 40 WHERE NOTED AS Fy = 40 ON DRAWINGS, HIGHER GRADES MAY NOT BE SUBSTITUTED.

ASTM A706 GRADE 60 FOR ALL MOMENT FRAME HORIZONTAL BEAM BARS, MOMENT FRAME VERTICAL COLUMN BARS, VERTICAL SHEAR WALL BARS, ALL COUPLING BEAM BARS (EXCEPT TIES), AND ALL ANCHORAGE REINFORCING AT BASE PLATES OF STEEL COLUMNS PART OF MOMENT FRAME/BRACED FRAME. PER ACI 318, ASTM A615 GRADE 60 MAY BE SUBSTITUTED FOR THESE MEMBERS IF THE ACTUAL YIELD STRENGTH BASED ON MILL TESTS DOES NOT EXCEED THE SPECIFIED YIELD STRENGTH BY MORE THAN 18 KSI, THE RATIO OF ACTUAL ULTIMATE TENSILE STRENGTH TO ACTUAL YIELD STRENGTH IS NOT LESS THAN 1.25, AND IF THE ELONGATION OVER AN 8" GAGE LENGTH MEETS THE FOLLOWING:

BAR SIZE	MINIMUM ELONGATION
#3 - #6	14% ≥
#7 - #11	12% ≥
#14, #18	10% ≥

ASTM A706 GRADE 60 FOR ALL WELDED BARS.

DETAIL FABRICATE AND PLACE PER ACI 315 AND ACI 318.

WELDED WIRE REINFORCEMENT SHALL CONFORM TO ASTM A1064. LAP ONE FULL MESH ON SIDES AND ENDS BUT NOT LESS THAN 8 INCHES. WELDED WIRE REINFORCING SHALL BE SUPPORTED TO WITHSTAND CONCRETE PLACEMENT. PULLING OF MESH INTO PLACE AFTER PLACEMENT IS NOT ALLOWED.

REINFORCING SPLICE AND DEVELOPMENT LENGTH SCHEDULE, Fy=60 KSI (UNLESS NOTED OTHERWISE)					
BAR SIZE	MINIMUM LAP SPLICE LENGTHS ("Ls")		MINIMUM DEVELOPMENT LENGTHS ("Ld")		MINIMUM EMBEDMENT LENGTH FOR STANDARD END HOOKS ("Ldh")
	TOP BARS (1)	OTHER BARS	TOP BARS (1)	OTHER BARS	
#3	2'-0"	1'-6"	1'-6"	1'-3"	0'-6"
#4	2'-8"	2'-0"	2'-0"	1'-7"	0'-6"
#5	3'-4"	2'-7"	2'-7"	2'-0"	0'-8"
#6	4'-0"	3'-1"	3'-1"	2'-4"	0'-10"
#7	5'-10"	4'-6"	4'-6"	3'-6"	1'-0"
#8	6'-8"	5'-2"	5'-2"	3'-11"	1'-3"
#9	7'-6"	5'-10"	5'-10"	4'-6"	1'-6"
#10	8'-6"	6'-6"	6'-6"	5'-0"	1'-9"
#11	9'-5"	7'-3"	7'-3"	5'-7"	2'-1"
#14	MECHANICAL SPLICE REQUIRED		8'-8"	6'-8"	5'-6"
#18	MECHANICAL SPLICE REQUIRED		11'-7"	8'-11"	8'-5"

SPLICE TABLE NOTES:

1. "TOP BARS" ARE HORIZONTAL BARS WITH MORE THAN 12" DEPTH OF CONCRETE CAST BELOW THEM.

MECHANICAL COUPLERS: "LENTON" BY NVENT, "CADWELD" BY NVENT, "BAR-LOCK" BY DAYTON SUPERIOR L-SERIES, OR PRE-APPROVED EQUAL. COUPLERS SHALL BE TYPE 2 PER ACI 318 SECTION 18.2.7.1.

FORM SAVERS: "LENTON" BY NVENT THREADED FORM SAVERS TYPE FS OR APPROVED EQUAL.

REINFORCING STEEL COVER

PROVIDE CONCRETE COVER OVER REINFORCEMENT AS FOLLOWS, UNLESS NOTED OTHERWISE:

CONCRETE CAST AGAINST EARTH ---------- 3"
EXPOSED TO WEATHER OR EARTH ---------- 2"
TIES ON BEAMS AND COLUMNS ---------- 1-1/2"
WALLS AND SLABS NOT EXPOSED TO WEATHER---- 3/4"
AUGERCAST PILES ---------- 2-1/2"

CONCRETE INSERTS: THREADED DOWEL BAR SUBSTITUTIONS SHALL BE MANUFACTURED BY RICHMOND SCREW ANCHOR CO., INC., OR PRE-APPROVED EQUAL AND SHALL BE CAPABLE OF DEVELOPING THE FULL TENSILE CAPACITY OF THE BAR.

POST-INSTALLED ANCHORS

POST-INSTALLED ANCHORS: SHALL ONLY BE USED WHERE SPECIFIED ON THE CONSTRUCTION DOCUMENTS. THE CONTRACTOR SHALL OBTAIN APPROVAL FROM THE STRUCTURAL ENGINEER PRIOR TO INSTALLING POST-INSTALLED ANCHORS IN PLACE OF MISSING OR MISPLACED CAST-IN-PLACE ANCHORS. CARE SHALL BE TAKEN IN PLACING POST-INSTALLED ANCHORS TO AVOID CONFLICTS WITH REBAR. INSTALL IN ACCORDANCE WITH THE MANUFACTURER'S PUBLISHED INSTALLATION INSTRUCTIONS. INSTALLER SHALL BE QUALIFIED AND TRAINED BY THE MANUFACTURER. HOLES SHALL BE HAMMER DRILLED ONLY (ROTARY DRILLED ONLY AT UNREINFORCED MASONRY - NO HAMMER TOOLS).

SUBSTITUTION REQUESTS, FOR PRODUCTS OTHER THAN THOSE SPECIFIED BELOW, SHALL BE SUBMITTED FOR APPROVAL A MINIMUM OF 2 WEEKS PRIOR TO BID, ALONG WITH CALCULATIONS THAT SHALL BE STAMPED BY A PROFESSIONAL ENGINEER (LICENSED IN THE STATE OF THE PROJECT) DEMONSTRATING THAT THE SUBSTITUTED PRODUCT IS CAPABLE OF ACHIEVING EQUIVALENT PERFORMANCE VALUES (MINIMUM) OF THE SPECIFIED PRODUCT USING THE APPROPRIATE DESIGN PROCEDURE AND/OR STANDARD(S) AS REQUIRED BY THE BUILDING CODE.

CONCRETE ANCHORS:
- ADHESIVE ANCHORS: HILTI HIT-HY 200 V3 (ICC-ESR-4868), HILTI HIT-RE 500 V3 (ICC-ESR-3814), DEWALT PURE 110+ (ICC-ESR-3298) OR SIMPSON SET-3G (ICC-ESR-4057) OR PRE-APPROVED EQUAL.
  - *CONCRETE SHALL BE A MINIMUM OF 21 DAYS OLD AT TIME OF INSTALLATION.
  - *CONCRETE SHALL BE IN THE TEMPERATURE RANGE AS REQUIRED BY THE CONCRETE MANUFACTURER.
  - *HOLE SHALL BY HAMMER-DRILLED ONLY.
  - *DO NOT INSTALL IN WATER-FILLED HOLES.
  - *INSTALLER OF HORIZONTAL OR UPWARDLY INCLINED (ANY POSITION EXCEPT DIRECTLY DOWNWARD) ANCHORS SHALL ALSO BE CERTIFIED BY THE ACI/CRSI ADHESIVE ANCHOR INSTALLER CERTIFICATION PROGRAM.
- EXPANSION ANCHORS: KWIKBOLT TZ2 (ICC ESR-4266) BY HILTI, INC., OR PRE-APPROVED EQUAL.
- SCREW ANCHORS: KWIK HUS-EZ (ICC ESR-3027) BY HILTI, INC., OR PRE-APPROVED EQUAL.

3427 BEACON AVE S
SEATTLE 98144
ANJALI@AGRANTDESIGN.COM
206-512-4209

anjali grant design LLC

JAMES M. LINDSAY
STATE OF WASHINGTON
33519
REGISTERED PROFESSIONAL ENGINEER

PCS Structural Solutions
Seattle | Tacoma | Portland
www.pcs-structural.com

3700 E MERCER WAY
BARNABIE POINT PROJECT

NO.	DATE	DESCRIPTION

4 JUNE 2025
BUILDING PERMIT

PROJECT:

GENERAL NOTES

S-002

12/15/2025 12:07:25 PM C:_Revit Models\25080 HNT Ph-12 R2024 (Central)_Dwell-PCS.rvt
© ANJALI GRANT DESIGN LLC ORIGINAL SHEET SIZE: 24" X 36"

STRUCTURAL STEEL

DETAILING, FABRICATION AND ERECTION

ALL WORKMANSHIP SHALL CONFORM TO THE AISC MANUAL OF STEEL CONSTRUCTION, 15TH EDITION, THE AISC SPECIFICATION FOR STRUCTURAL STEEL BUILDINGS JULY 7, 2016, THE AISC CODE OF STANDARD PRACTICE, JUNE 15, 2016 AND THE AISC SEISMIC PROVISIONS FOR STRUCTURAL STEEL BUILDINGS, JULY 12, 2016.

STEEL MEMBERS ARE EQUALLY SPACED BETWEEN COLUMNS AND/OR DIMENSION POINTS UNLESS NOTED OTHERWISE.

THE CONTRACTOR SHALL BE RESPONSIBLE FOR ALL ERECTION AIDES AND JOINT PREPARATIONS THAT INCLUDE BUT ARE NOT LIMITED TO, ERECTION ANGLES, LIFT HOLES, AND OTHER AIDES, WELDING PROCEDURES, REQUIRED ROOT OPENINGS, ROOT FACE DIMENSIONS, GROOVE ANGLES, BACKING BARS, WELD EXTENSION TABS, COPES, SURFACE ROUGHNESS VALUES AND TAPERS OF UNEQUAL PARTS. THE CONTRACTOR SHALL BE RESPONSIBLE FOR THE COMPLIANCE WITH ALL CURRENT OSHA REQUIREMENTS.

HOLES, COPES OR OTHER CUTS OR MODIFICATIONS OF THE STRUCTURAL STEEL MEMBERS SHALL NOT BE MADE IN THE FIELD WITHOUT WRITTEN APPROVAL FROM THE STRUCTURAL ENGINEER.

STEEL FABRICATORS

ALL STEEL FABRICATION SHALL BE PERFORMED BY A FABRICATOR CERTIFIED BY THE AMERICAN INSTITUTE OF STEEL CONSTRUCTION. THE FABRICATOR SHALL BE DESIGNATED AN AISC CERTIFIED PLANT, CATEGORY BU AT THE TIME OF BID AND SHALL MAINTAIN THIS CERTIFICATION FOR THE DURATION OF THE PROJECT.

NON-AISC CERTIFIED STEEL FABRICATORS SHALL HAVE FIVE YEARS MINIMUM EXPERIENCE ON SIMILAR PROJECTS OF EQUAL OR LARGER COMPLEXITY AND SCOPE. QUALIFICATIONS SHALL BE SUBMITTED TWO WEEKS PRIOR TO BID.

STEEL ERECTORS

ALL STEEL ERECTION SHALL BE PERFORMED BY AN ERECTOR CERTIFIED BY THE AMERICAN INSTITUTE OF STEEL CONSTRUCTION. THE ERECTOR SHALL BE DESIGNATED AN AISC CERTIFIED ERECTOR, CATEGORY CSE AT THE TIME OF BID AND SHALL MAINTAIN THIS CERTIFICATION FOR THE DURATION OF THE PROJECT.

NON-AISC CERTIFIED STEEL ERECTORS MAY BE ACCEPTABLE PROVIDED THEY HAVE A MINIMUM OF (5) YEARS EXPERIENCE ON PROJECTS OF EQUAL OR LARGER COMPLEXITY AND SCOPE. QUALIFICATIONS SHALL BE SUBMITTED TO STRUCTURAL ENGINEER (2) WEEKS PRIOR TO BID.

STEEL DETAILERS

ALL STEEL DETAILING SHALL BE PERFORMED BY A DETAILER WITH FIVE YEARS MINIMUM EXPERIENCE ON SIMILAR PROJECTS OF EQUAL OR LARGER COMPLEXITY AND SCOPE. QUALIFICATIONS SHALL BE SUBMITTED TWO WEEKS PRIOR TO BID.

MATERIAL PROPERTIES

WIDE FLANGE SECTIONS: ASTM A992 (Fy = 50 KSI)

H-PILES: ASTM A572 (Fy = 50 KSI)

OTHER SHAPES AND PLATES: ASTM A36 (Fy = 36 KSI) TYP. U.N.O.; ASTM A572 (Fy = 50 KSI) WHERE INDICATED

HOLLOW STRUCTURAL SECTIONS: RECTANGULAR & SQUARE - ASTM A500, GRADE C (Fy = 50 KSI) ROUND - ASTM A500, GRADE C (Fy = 46 KSI)

STRUCTURAL STEEL PIPES: ASTM A53, GRADE B, TYPE E OR S (Fy = 35 KSI)

MACHINE BOLTS (M.B.): ASTM A307, GRADE A

HIGH-STRENGTH BOLTS: ASTM 3125, GRADE F1852, UNLESS NOTED OTHERWISE, ASTM 3125, GRADE F2280 WHERE INDICATED

ANCHOR BOLTS (A.B.): ASTM F1554, GRADE 36, UNLESS NOTED OTHERWISE, ASTM F1554, GRADE 105 WHERE INDICATED.

WIDE FLANGE STRUCTURAL MEMBERS WHICH ARE ASTM A6 GROUP 3 SHAPES WITH FLANGE THICKNESS 1-1/2" THICK AND THICKER, AND ALL ASTM A6 GROUP 4 AND 5 SHAPES AND PLATE THAT IS 1-1/2" THICK OR THICKER SHALL HAVE A CHARPY V-NOTCH (CVN) TOUGHNESS OF 20 FT-LBS @ 70 DEG F.

STAINLESS STEEL BOLTS: BOLTS SPECIFIED AS STAINLESS STEEL SHALL BE ASTM F593 S30400 ALLOY GROUP 1 (Fy = 30 KSI MINIMUM). NUTS SHALL BE ASTM F594. STAINLESS STEEL BOLTS SHALL BE INSTALLED SNUG-TIGHT BRING ALL THE CONNECTED PLIES INTO FIRM CONTACT. STAINLESS STEEL LOCK WASHERS SHOULD BE USED UNDER BOTH THE BOLT HEAD AND NUT. DURING INSTALLATION, GALLING AND SEIZER OF STAINLESS STEEL BOLTS SHALL BE PREVENTED BY A METHOD APPROVED BY THE ENGINEER OR RECORD.

ANCHOR BOLTS (A.B.): ASTM F1554, GRADE 36, UNLESS NOTED OTHERWISE, ASTM F1554, GRADE 105 WHERE INDICATED.

WIDE FLANGE STRUCTURAL MEMBERS WHICH ARE ASTM A6 GROUP 3 SHAPES WITH FLANGE THICKNESS 1-1/2" THICK AND THICKER, AND ALL ASTM A6 GROUP 4 AND 5 SHAPES AND PLATE THAT IS 1-1/2" THICK OR THICKER SHALL HAVE A CHARPY V-NOTCH (CVN) TOUGHNESS OF 20 FT-LBS @ 70 DEG F.

WELDING

STRUCTURAL STEEL: WELD IN ACCORDANCE WITH "STRUCTURAL WELDING CODE" AWS D1.1.

LATERAL FORCE-RESISTING SYSTEM: WELD IN ACCORDANCE WITH "STRUCTURAL WELDING CODE SEISMIC SUPPLEMENT" AWS D1.8.

REINFORCING STEEL: WELD IN ACCORDANCE WITH "REINFORCING STEEL WELDING CODE" AWS D1.4. WELD ONLY WITH SPECIFIC APPROVAL OF THE STRUCTURAL ENGINEER. IN NO CASE SHALL A WELD BE MADE WITHIN 6 BAR DIAMETERS OF A "COLD BEND".

CERTIFICATION: ALL WELDING SHALL BE PERFORMED BY WABO CERTIFIED WELDERS. WELDERS SHALL BE PREQUALIFIED FOR EACH POSITION AND WELD TYPE WHICH THE WELDER WILL BE PERFORMING.

WELD TABS (ALSO KNOWN AS WELD "EXTENSION" TABS OR "RUN OFF" TABS) SHALL BE USED. AFTER THE WELD HAS BEEN COMPLETED THE WELD TABS SHALL BE REMOVED AND THE WELD END GROUND TO A SMOOTH CONTOUR. WELD "DAMS" OR "END DAMS" SHALL NOT BE USED.

THE PROCESS CONSUMABLES FOR ALL WELD FILLER METAL INCLUDING TACK WELDS, ROOT PASS AND SUBSEQUENT PASSES DEPOSITED IN A JOINT SHALL BE COMPATIBLE.

ALL WELD FILLER METAL AND WELD PROCESS SHALL PROVIDE THE TENSILE STRENGTH AND CHARPY V-NOTCH RATINGS AS FOLLOWS:

GRAVITY FRAME

WELD TYPE	FILLER METAL TENSILE STRENGTH	CHARPY V-NOTCH (CVN) RATING
FILLET	70 KSI	-----
PARTIAL PENETRATION	70 KSI	-----
COMPLETE PENETRATION	70 KSI	20 FT-LBS @ 40 DEG F

LATERAL FORCE-RESISTING SYSTEM

WELD TYPE	FILLER METAL TENSILE STRENGTH	CHARPY V-NOTCH (CVN) RATING
FILLET	70 KSI	20 FT-LBS @ 0 DEG F
PARTIAL PENETRATION	70 KSI	20 FT-LBS @ 0 DEG F
COMPLETE PENETRATION	70 KSI	20 FT-LBS @ 0 DEG F
FILLET (1)	70 KSI	40 FT-LBS @ 70 DEG F
PARTIAL PENETRATION (1)	70 KSI	40 FT-LBS @ 70 DEG F
COMPLETE PENETRATION (1)	70 KSI	40 FT-LBS @ 70 DEG F

(1) DCW LOCATIONS ARE INDICATED IN THE DETAILS.

WELDED CONNECTIONS INSPECTION:

1. ALL WELDING SHALL BE CHECKED BY VISUAL MEANS AND BY OTHER METHODS DEEMED NECESSARY BY THE WELDING INSPECTOR.
2. ALL FULL PENETRATION WELDS TO MEMBERS WHICH FORM A PORTION OF THE LATERAL FORCE-RESISTING SYSTEM SHALL BE CHECKED 100 PERCENT BY ULTRASONIC TESTING.
3. THE CONTRACTOR SHALL SUBMIT A WRITTEN WELDING PROCEDURE SPECIFICATION FOR SHOP AND FIELD WELDING OF ALL LATERAL FORCE-RESISTING SYSTEM CONNECTIONS FOR APPROVAL TO THE STRUCTURAL ENGINEER OF RECORD PRIOR TO FABRICATION.

THE STANDARDS OF ACCEPTANCE FOR WELDS TESTED BY ULTRASONIC METHODS SHALL CONFORM TO AWS D1.1.

ALL WELDS FOUND TO BE DEFECTIVE SHALL BE REPAIRED AND REINSPECTED BY THE SAME METHODS ORIGINALLY USED, AND THIS REPAIR AND REINSPECTION SHALL BE PAID FOR BY THE CONTRACTOR

GENERAL REQUIREMENTS

HIGH-STRENGTH BOLTS: ALL A325 HIGH-STRENGTH BOLTS (HSB) INDICATED AS A325 IN THE DRAWINGS SHALL BE ASTM F3125, GRADE F1852, UNLESS OTHERWISE INDICATED AS A490. ALL HSB INDICATED AS A490 SHALL BE ASTM F3125, GRADE F2280. ALL HSB SHALL BE BY "LEJEUNE BOLT COMPANY" OR PRE-APPROVED EQUAL AND SHALL BE INSTALLED PER SECTION 8.2 OF THE "SPECIFICATION FOR STRUCTURAL JOINTS USING HIGH STRENGTH BOLTS", JUNE 2020 BY THE RESEARCH COUNCIL ON STRUCTURAL CONNECTIONS (RCSC SPECIFICATION). ALL BOLT HOLES SHALL BE STANDARD ROUND HOLES UNLESS NOTED OTHERWISE. THE FAYING SURFACES OF ALL PLIES WITHIN THE GRIP OF SLIP-CRITICAL BOLTS (A325SC OR A490SC) SHALL MEET THE REQUIREMENTS FOR A CLASS A SURFACE PER SECTION 3.2 OF THE RCSC SPECIFICATION.

BOLTED CONNECTIONS INSPECTION: CONNECTIONS MADE WITH BEARING TYPE BOLTS SHALL BE INSPECTED PER SECTION 9.1 AND CONNECTIONS MADE WITH SLIP-CRITICAL TYPE BOLTS (A325SC OR A490SC) SHALL BE INSPECTED PER SECTION 9.3 OF RCSC SPECIFICATION.

ADHESIVE ANCHOR RODS: FULLY THREADED ASTM F1554, GRADE 36 UNLESS NOTED OTHERWISE.

HEADED STUDS: SHALL BE "H4L HEADED CONCRETE ANCHORS" FOR STUDS 5/8" DIAMETER AND SMALLER AND "S3L SHEAR CONNECTORS" FOR STUDS 3/4" DIAMETER AND LARGER AS MANUFACTURED BY NELSON STUD WELDING, INC. OR PRE-APPROVED EQUAL AND SHALL CONFORM TO AWS D1.1. ALL HEADED STUDS SHALL BE INSTALLED PER MANUFACTURER'S RECOMMENDATIONS USING A NELSON WELD GUN, UNLESS NOTED OTHERWISE ON DETAILS. ALL WELDS SHALL BE MADE AND INSPECTED IN ACCORDANCE WITH AWS D1.1.

DEFORMED BAR ANCHORS: SHALL BE "D2L DEFORMED BAR ANCHORS" AS MANUFACTURED BY NELSON STUD WELDING, INC. OR PRE-APPROVED EQUAL AND SHALL CONFORM TO AWS D1.1. ALL DEFORMED BAR ANCHORS SHALL BE INSTALLED PER MANUFACTURER'S RECOMMENDATIONS USING A NELSON WELD GUN, UNLESS NOTED OTHERWISE ON DETAILS. ALL WELDS SHALL BE MADE AND INSPECTED IN ACCORDANCE WITH AWS D1.1.

FINISH: STRUCTURAL STEEL SHALL BE UNPAINTED, UNLESS NOTED OTHERWISE, AND SHALL BE CLEAN OF LOOSE RUST, LOOSE MILL SCALE, OIL, GREASE AND OTHER FOREIGN SUBSTANCES AND SHALL MEET THE REQUIREMENTS OF SSPC-SP1. WHERE STRUCTURAL STEEL IS NOTED TO BE PAINTED, ALL AREAS COMPRISING THE FAYING SURFACES OF BOLTED CONNECTIONS MADE WITH SLIP-CRITICAL TYPE BOLTS (A325SC OR A490SC) SHALL COMPLY WITH THE REQUIREMENTS OF THE RCSC SPECIFICATION. WHERE STRUCTURAL STEEL IS NOTED TO BE GALVANIZED, IT SHALL BE HOT-DIP GALVANIZED IN ACCORDANCE WITH ASTM A123, A384, AND A385. ALL SURFACES WITHIN TWO INCHES OF ANY FIELD WELD LOCATION SHALL BE FREE OF MATERIALS THAT WOULD PREVENT PROPER WELDING OR PRODUCE OBJECTIONABLE FUMES. FIELD TOUCH-UP OF PRIMED, PAINTED, AND GALVANIZED SURFACES SHALL BE PERFORMED TO REPAIR COATING ABRASIONS, AS WELL AS TO PROTECT ALL AREAS AT CONNECTIONS.

BUCKLING-RESTRAINED BRACE:
PROVIDE ALL PARTS, MATERIALS AND LABOR REQUIRED FOR THE DESIGN, DELIVERY AND TESTING OF BUCKLING-RESTRAINED BRACES, WHICH ARE DESIGNED BY THE MANUFACTURER TO MEET STIFFNESS, YIELD STRENGTH AND ELONGATION REQUIREMENTS AS INDICATED ON THE DRAWINGS AND SPECIFICATION. DESIGN OF BRACES SHALL BE BASED ON CONNECTION TYPES AND PROPORTIONS INDICATED ON THE DRAWINGS.

COMPOSITE FLOOR DECK: SHALL CONTAIN THE MINIMUM PROPERTIES SHOWN ON THE STRUCTURAL DRAWINGS AND SHALL BE "FORMLOK" AS MANUFACTURED BY VERCO MANUFACTURING CO., "W COMPOSITE" AS MANUFACTURED BY ASC STEEL DECK, "EPICORE" AS MANUFACTURED BY EPIC METALS, OR PRE-APPROVED EQUAL. THE FLOOR UNITS SHALL BE FORMED FROM STEEL SHEETS CONFORMING TO ASTM A653, AND GALVANIZED PER ASTM A924. SUBMIT SHOP DRAWINGS SHOWING LAYOUT AND FASTENING PATTERN. ALL ACCESSORIES INCLUDING EDGE FORMS, CLOSURE, ETC. SHALL BE PROVIDED TO COMPLETE THE INSTALLATION OF THE COMPOSITE FLOOR.

METAL ROOF DECK: SHALL CONTAIN THE MINIMUM PROPERTIES SHOWN ON THE STRUCTURAL DRAWINGS AND SHALL BE MANUFACTURED BY VERCO MANUFACTURING CO., ASC STEEL DECK, EPIC METALS, OR PRE-APPROVED EQUAL. THE ROOF DECK SHALL BE FORMED FROM STEEL SHEETS CONFORMING TO ASTM A611 OR A653, AND SHALL BE GALVANIZED PER ASTM A924. THE ROOF DECK SHALL BE PLACED ON THE SUPPORTING FRAMEWORK WITH A MINIMUM END LAP OF TWO INCHES. SUBMIT SHOP DRAWINGS SHOWING LAYOUT AND FASTENING PATTERN. ALL ACCESSORIES SHALL BE PROVIDED TO COMPLETE THE ERECTION OF THE STEEL DECK.

PREFABRICATED METAL STAIRS AND LANDINGS: SHALL BE DESIGNED PER AISC AND IBC REQUIREMENTS. STRINGERS AND LANDINGS SHALL BE DESIGNED FOR A MINIMUM OF 100 PSF LIVE LOAD. INDIVIDUAL TREADS SHALL BE DESIGNED FOR 300 POUND CONCENTRATED LOAD. EGRESS STAIRS AND LANDINGS SHALL BE DESIGNED WITH CONNECTIONS THAT ALLOW FOR SLIDING OR PROVIDE DUCTILITY TO ACCOMMODATE A HORIZONTAL SEISMIC INTERSTORY DRIFT OF 2" BETWEEN EACH LEVEL PER SECTION 13.5.10 OF ASCE 7-16. THE STAIR DESIGN CALCULATIONS AND SHOP DRAWINGS SHALL BE SUBMITTED TO THE STRUCTURAL ENGINEER OF RECORD SHOWING THE COMPLETE ASSEMBLY AND ATTACHMENTS TO THE SURROUNDING STRUCTURE. THE ATTACHMENTS SHALL BE DETAILED SUCH THAT NO TORQUE IS APPLIED TO THE SURROUNDING STRUCTURAL MEMBERS. THE CALCULATIONS AND SHOP DRAWINGS SHALL BE STAMPED BY A PROFESSIONAL ENGINEER LICENSED IN THE STATE OF THE PROJECT.

COLD-FORMED STEEL FRAMING CONSTRUCTION:

THE DESIGN, INSTALLATION AND CONSTRUCTION OF COLD-FORMED CARBON OR LOW-ALLOY STEEL, STRUCTURAL AND NON-STRUCTURAL STEEL FRAMING, SHALL BE IN ACCORDANCE WITH IBC SECTION 2211 AND AMERICAN IRON AND STEEL INSTITUTE (AISI) STANDARD S100-16 AND S240-20 AND SHALL BE MANUFACTURED BY A MEMBER OF THE STEEL STUD MANUFACTURER'S ASSOCIATION (SSMA), CERTIFIED STEEL STUD ASSOCIATION (CSSA), STEEL FRAMING INDUSTRY ASSOCIATION (SFIA), OR PRE-APPROVED EQUAL, IN ACCORDANCE WITH A CURRENT ICC EVALUATION SERVICE REPORT, AISI S202-20 AND S240-20. ALL 54 MIL AND HEAVIER GALVANIZED MEMBERS SHALL BE FORMED FROM STEEL THAT MEETS THE REQUIREMENTS OF ASTM A653, QUALITY SQ, GRADE 50, CLASS 1, FY= 50 KSI. ALL 43 MIL AND LIGHTER GALVANIZED MEMBERS SHALL BE FORMED FROM STEEL THAT MEETS THE REQUIREMENTS OF ASTM A653, QUALITY SQ, GRADE 33, FY=33 KSI. BRIDGING PER MANUFACTURER'S REQUIREMENTS AND AS SHOWN IN THE STRUCTURAL DRAWINGS SHALL BE IN PLACE PRIOR TO PLACING OF ANY CONSTRUCTION LOADS. ALL RUNS SHALL BE RIGIDLY ANCHORED TO END WALLS.

EXTERIOR WALL AND BEARING WALL COLD-FORMED STEEL FRAMING: COLD-FORMED STEEL FRAMING MEMBERS SHALL MEET THE TYPE, SIZE AND THICKNESS AS INDICATED ON THE STRUCTURAL PLANS AND SPECIFICATIONS.

INTERIOR NON-BEARING WALL, CEILING, SOFFIT, AND OTHER MISC. COLD-FORMED STEEL FRAMING: COLD-FORMED STEEL FRAMING MEMBERS SHALL MEET THE TYPE, SIZE, AND THICKNESS AS INDICATED IN THE ARCHITECTURAL DRAWINGS AND SPECIFICATIONS, AND SHALL CONFORM TO THE MINIMUM PERSCRIPTIVE REQUIREMENTS OF THE GYPSUM CONSTRUCTION HANDBOOK BY CGC, INC. FRAMING CONDITIONS THAT EXCEED THE WEIGHT, SPAN OR HEIGHT LIMITATIONS SHALL BE CONSTRUCTED USING APPLICABLE DETAILS ON THE STRUCTURAL DRAWINGS. THE CONTRACTOR SHALL BE RESPONSIBLE FOR THE DESIGN, DETAILING, FABRICATION AND ERECTION OF ALL COLD-FORMED FRAMING NOT SPECIFICALLY DETAILED IN THE GYPSUM CONSTRUCTION HANDBOOK OR ON THE STRUCTURAL DRAWINGS. THE DESIGN AND DETAILING OF THE COLD-FORMED STEEL FRAMING AND CONNECTION TO THE STRUCTURE SHALL BE PREPARED UNDER THE DIRECTION OF AND SHALL BE STAMPED BY A PROFESSIONAL ENGINEER LICENSED IN THE STATE OF THE PROJECT AND SHALL BE SUBMITTED TO THE ENGINEER OF RECORD FOR APPROVAL PRIOR TO CONSTRUCTION.

COLD-FORMED STEEL FRAMING SUBSTITUTION: AT THE CONTRACTOR'S OPTION, THE CONTRACTOR SHALL BE RESPONSIBLE FOR THE DESIGN, DETAILING, FABRICATION AND ERECTION OF THE INTERIOR NON-BEARING COLD-FORMED STEEL FRAMING, NOT OCCURING AT BRICK VENEER, AND THE CONNECTION OF THE COLD-FORMED STEEL FRAMING TO THE STRUCTURE. THE DESIGN AND DETAILING OF THE COLD-FORMED STEEL FRAMING AND CONNECTION TO THE STRUCTURE SHALL BE PREPARED UNDER THE DIRECTION OF AND STAMPED BY A PROFESSIONAL ENGINEER LICENSED IN THE STATE OF THE PROJECT AND SHALL BE SUBMITTED TO THE ENGINEER OF RECORD FOR APPROVAL PRIOR TO CONSTRUCTION.

POWDER ACTUATED FASTENERS: SHALL BE X-U UNIVERSAL KNURLED SHANK FASTENER BY HILTI OR PRE-APPROVED EQUAL. INSTALL PER ALL MANUFACTURER'S PUBLISHED RECOMMENDATIONS. COLD-FORMED STEEL TO STRUCTURAL STEEL: UNLESS NOTED OTHERWISE, PROVIDE 0.157" SHANK DIAMETER X-U LOW-VELOCITY FASTENER - FASTENER TIP SHALL PENETRATE STRUCTURAL STEEL. COLD-FORMED STEEL TO CONCRETE: UNLESS NOTED OTHERWISE, PROVIDE 0.157" SHANK DIAMETER X-U LOW-VELOCITY FASTENER - EMBED 1-1/2" MINIMUM INTO CONCRETE, UNLESS NOTED OTHERWISE.

SLIP CONNECTIONS: THE STEEL NETWORK "VERTICLIP" OR PRE-APPROVED EQUAL. MATCH CLIP WITH STUD SIZE AND THICKNESS. ATTACH PER MANUFACTURER'S REQUIREMENTS.

METAL-BACKED GWB STRUCTURAL PANELS: SHALL BE "SURE-BOARD SERIES 200" STRUCTURAL PANELS BY CALIFORNIA EXPANDED METAL PRODUCTS CO. (CEMCO), OR APPROVED EQUAL. PANELS ARE TO BE INSTALLED VERTICALLY WITH ALL EDGES BLOCKED.

MISCELLANEOUS:

PRE-APPROVED SUBSTITUTIONS: SUBSTITUTIONS MAY BE ALLOWED ONLY IF THEY MEET THE REQUIREMENTS OF THESE GENERAL NOTES AND THE SPECIFICATIONS, AND IF COMPLETE WRITTEN ENGINEERING DATA FOR EACH CONDITION REQUIRED FOR THIS PROJECT IS PROVIDED TO THE STRUCTURAL ENGINEER TWO WEEKS PRIOR TO BID DATE AND APPROVED IN WRITTEN ADDENDA BY THE ARCHITECT. DATA IS TO INDICATE CODE BASIS BY YEAR, AUTHORITY FOR STRESSES AND STRESS INCREASES, IF ANY, AND AMOUNT OF EXPECTED DEFLECTION FOR FLEXURAL MEMBERS UNDER (1) TOTAL LOAD AND (2) LIVE LOAD ONLY. ALL INCREASED COSTS IN MECHANICAL, SPRINKLER, ELECTRICAL OR GENERAL INSTALLATION AND ANY ARCHITECTURAL OR STRUCTURAL REDESIGN RESULTING FROM SUBSTITUTION SHALL BE BORNE BY THE GENERAL CONTRACTOR.

SHOP DRAWINGS/SUBMITTALS

THE FOLLOWING SHOP DRAWINGS/SUBMITTALS SHALL BE PROVIDED FOR REVIEW AND APPROVAL BY THE STRUCTURAL ENGINEER PRIOR TO FABRICATION OR DELIVERY.

		STRUCTURAL ENGR.	BLDG. DEPT.
1.	CONCRETE MIX DESIGNS	X	X
2.	REINFORCING STEEL SHOP DRAWINGS	X	
3.	STRUCTURAL STEEL	X	X
4.	METAL DECK	X	X
5.	COLD-FORMED STEEL FRAMING	X	X
6.	PREFABRICATED METAL STAIRS AND LANDINGS	X	X
7.	MISCELLANEOUS STEEL	X	X
8.	EMBEDS AND PENETRATIONS IN CONCRETE	X	X
9.	CONTRACTOR'S STATEMENT OF RESPONSIBILITY	X	X

DEFERRED SUBMITTALS

THE FOLLOWING ARE NOT INCLUDED WITH THE BUILDING PERMIT DRAWINGS AND SHALL BE SUBMITTED TO THE BUILDING DEPARTMENT AND THE STRUCTURAL ENGINEER FOR REVIEW AND APPROVAL AS A DEFERRED SUBMITTAL. SUBMITTALS SHALL BE STAMPED BY A ENGINEER LICENSED IN THE STATE OF THE PROJECT AS NOTED.

		ENGINEER STAMP REQUIRED
1.	COLD-FORMED STEEL FRAMING (WHEN APPLICABLE)	PE
2.	BUCKLING RESTRAINED BRACES	PE

SPECIAL INSPECTION: SPECIAL INSPECTION SHALL BE PROVIDED BY AN INDEPENDENT TESTING LABORATORY PER THE REQUIREMENTS OF IBC CHAPTER 17 AND THE LOCAL BUILDING OFFICIAL OR APPLICABLE JURISDICTION AND THE CONTRACT DOCUMENTS. THE SPECIAL INSPECTOR SHALL SUBMIT INSPECTION REPORTS AND A FINAL SIGNED REPORT TO THE BUILDING OFFICIAL FOR THE ITEMS LISTED IN THE QUALITY ASSURANCE/SPECIAL INSPECTION SECTION:

anjali grant design LLC
3427 BEACON AVE S
SEATTLE 98144
ANJALI@AGRANTDESIGN.COM
206-512-4209

JAMES M. LEJEUNE
STATE OF WASHINGTON
33519
REGISTERED
PROFESSIONAL ENGINEER

PCS Structural Solutions
Seattle | Tacoma | Portland
www.pcs-structural.com

3700 E MERCER WAY
BARNABIE POINT PROJECT

NO.	DATE	DESCRIPTION
	4 JUNE 2025	BUILDING PERMIT

PROJECT:

GENERAL NOTES

S-003

12/15/2025 12:07:26 PM C:_Revit Models\23080 INIT Pln 22 R2024 (Central)_Dwg\4-PCS5.rvt
© ANJALI GRANT DESIGN LLC ORIGINAL SHEET SIZE: 24" X 36"

STATEMENT OF SPECIAL INSPECTIONS:

SPECIAL INSPECTION: SPECIAL INSPECTION SHALL BE PROVIDED PER THE REQUIREMENTS OF IBC SECTION 1704 AND 1705 AND AS NOTED HEREIN.

STRUCTURAL SYSTEM	VERIFICATION AND INSPECTION	CONTINUOUS	PERIODIC	COMMENTS	REFERENCES
SOILS	VERIFY MATERIALS BELOW SHALLOW FOUNDATIONS ARE ADEQUATE TO ACHIEVE THE DESIGN BEARING CAPACITY		X		IBC 1705.6
	VERIFY EXCAVATIONS ARE EXTENDED TO PROPER DEPTH AND HAVE REACHED PROPER MATERIAL		X		
	PERFORM CLASSIFICATION AND TESTING OF COMPACTED FILL MATERIALS		X		
	DURING FILL PLACEMENT, VERIFY USE OF PROPER MATERIALS AND PROCEDURES IN ACCORDANCE WITH THE PROVISIONS OF THE APPROVED GEOTECHNICAL REPORT. VERIFY DENSITIES AND LIFT THICKNESSES DURING PLACEMENT AND COMPACTION OF COMPACTED FILL.	X			
	PRIOR TO PLACEMENT OF COMPACTED FILL, INSPECT SUBGRADE AND VERIFY THAT SITE HAS BEEN PREPARED PROPERLY		X		
	CONSTRUCTION OF AGGREGATE PIER	X			IBC 1705.8
STEEL CONSTRUCTION	VISUAL WELDING INSPECTION			SPECIAL INSPECTIONS IN THIS SECTION **MAY BE** WAIVED WHERE FABRICATION IS PERFORMED ON THE PREMISES OF A FABRICATOR REGISTERED AND APPROVED IN ACCORDANCE WITH IBC SECTION 1704.2.5	AISC 360 CHAPTER N5.4 AISC 341 CHAPTER J6.1
	A. INSPECTION PRIOR TO WELDING		X		TABLE N5.4-1; TABLE J6.1
	B. INSPECTION DURING WELDING		X		TABLE N5.4-2; TABLE J6.2
	C. INSPECTION AFTER WELDING		X		TABLE N5.4-3; TABLE J6.3
	NON-DESTRUCTIVE TESTING OF WELDED JOINTS	X			AISC 360 CHAPTER N5.5 AISC 341 CHAPTER J6.2
	HIGH STRENGTH BOLTING INSPECTION				AISC 360 CHAPTER N5.6 AISC 341 CHAPTER J7
	A. INSPECTION PRIOR TO BOLTING		X		TABLE N5.6-1; TABLE J7.1
	B. INSPECTION DURING BOLTING		X		TABLE N5.6-2; TABLE J7.2
	C. INSPECTION AFTER BOLTING		X		TABLE N5.6-3; TABLE J7.3
	INSPECTION OF GALVANIZED STRUCTURAL STEEL MAIN MEMBERS		X		AISC 360 CHAPTER N5.7
	OTHER INSPECTION TASKS				AISC 360 CHAPTER N5.8 AISC 341 CHAPTER J8
	A. ANCHOR RODS AND OTHER EMBEDMENTS PRIOR TO CONCRETE PLACEMENT		X		AISC 360 CHAPTER N5.8
	B. INSPECT STEEL FRAME FOR COMPLIANCE WITH CONSTRUCTION DOCUMENTS		X		AISC 360 CHAPTER N5.8
	C. REDUCED BEAM SECTION INSPECTION		X		AISC 341 TABLE J8.1
	D. PROTECTED ZONE INSPECTION		X		AISC 341 TABLE J8.1
	INSPECTION OF COMPOSITE (SEISMIC FORCE RESISTING SYSTEM (SFRS)) STRUCTURES				AISC 341 CHAPTER J9
	A. INSPECTION OF COMPOSITE (SFRS) STRUCTURES PRIOR TO CONCRETE PLACEMENT		X		TABLE J9.1
	B. INSPECTION OF COMPOSITE (SFRS) STRUCTURES DURING CONCRETE PLACEMENT		X		TABLE J9.2
	C. INSPECTION OF COMPOSITE (SFRS) STRUCTURES AFTER CONCRETE PLACEMENT		X		TABLE J9.3
STEEL CONSTRUCTION OTHER THAN STRUCTURAL STEEL	MATERIAL VERIFICATION OF COLD-FORMED STEEL DECK:				
	A. IDENTIFICATION MARKINGS TO CONFORM TO ASTM STANDARDS SPECIFIED IN THE APPROVED CONSTRUCTION DOCUMENTS		X		APPLICABLE ASTM MATERIAL STANDARDS & IBC 2210.1.1
	B. MANUFACTURER'S CERTIFIED TEST REPORTS		X		
	INSPECTION OF WELDING				AWS D1.3
	A. COLD-FORM STEEL DECK WELDS		X		AWS D1.4
	B. OPEN WEB STEEL JOISTS & JOIST GIRDERS	X			IBC 1705.2.3
	1. END CONNECTIONS - WELDING OR BOLTED		X		SJI SPECIFICATIONS LISTED IN SECTION 2207.1
	2. BRIDGING - HORIZONTAL OR DIAGONAL				
	a. STANDARD BRIDGING		X		
	b. BRIDGING THAT DIFFERS FROM THE SJI SPECIFICATIONS LISTED IN SECTION 2207.1		X		SJI SPECIFICATIONS LISTED IN SECTION 2207.1
CONCRETE	INSPECT REINFORCEMENT AND VERIFY PLACEMENT		X	SPECIAL INSPECTIONS NOT REQUIRED FOR THE FOLLOWING CONDITIONS: NON-STRUCTURAL SLAB ON GRADE CONCRETE FOUNDATION WALLS WITH F'c ≤ 2500 PSI ISOLATED SPREAD FOOTINGS FOR BUILDINGS THREE-STORIES AND LESS ABOVE GRADE PLANE CONTINUOUS FOOTINGS SUPPORTING WALLS OF THREE-STORIES AND LESS ABOVE GRADE PLANE WHERE WALLS ARE LIGHT-FRAME CONSTRUCTION AND STRUCTURAL DESIGN IS BASED ON F'c ≤ 2500 PSI PERIODIC INSPECTION TO INCLUDE A QUANTITY OF 10% WITH A MINIMUM OF (5) ANCHORS INSPECTED PER INSTALLER ON A DAILY BASIS.	ACI 318: CH 20, 25.2, 25.3, 26.6-1 TO 26.6-3, IBC 1908
	ANCHORS CAST IN CONCRETE-PRIOR TO AND DURING PLACEMENT OF CONCRETE		X		ACI 318: 26.7 AISC 360 SECTION N7
	VERIFY USE OF REQUIRED DESIGN MIX		X		ACI 318, CH 19
	PRIOR TO CONCRETE PLACEMENT, FABRICATE SPECIMENS FOR STRENGTH TESTS, PERFORM SLUMP AND AIR CONTENT TESTS, AND DETERMINE THE TEMPERATURE OF THE CONCRETE	X			ASTM C172, C31 ACI 318: 26.4, 26.12
	CONCRETE PLACEMENT FOR PROPER APPLICATION	X			ACI 318: 26.5
	MAINTENANCE OF SPECIFIED CURING TEMPERATURE AND TECHNIQUES		X		ACI 318: 26.5.3 TO 26.5.5
	ANCHORS POST-INSTALLED IN HARDENED CONCRETE (MECHANICAL ANCHORS INSTALLED IN ANY DIRECTION AND ADHESIVE ANCHORS INSTALLED DOWNWARD)		X		ACI 318: 26.7 MFR EVAL REPORT MFR PUBLISHED INSTALLATION INSTRUCTIONS
	ANCHORS POST-INSTALLED IN HARDENED CONCRETE (ADHESIVE ANCHORS INSTALLED HORIZONTAL OR UPWARDLY INCLINED)	X			ACI 318: 26.7 MFR EVAL REPORT MFR PUBLISHED INSTALLATION INSTRUCTIONS
CONCRETE (CONT.)	INSPECT FORMWORK FOR SHAPE, LOCATION AND DIMENSIONS OF THE CONCRETE MEMBER BEING FORMED		X		ACI 318: 26.11.1.2(b)
	MATERIAL VERIFICATION OF REINFORCEMENT STEEL FOR ASTM A615 REINFORCING		X	MANUFACTURER SHALL PROVIDE MILL TEST REPORTS. CONTINUOUS INSPECTION FOR ALL WELDS GREATER THAN 5/16" FILLET. PERIODIC INSPECTION FOR FILLET WELD 5/16" AND SMALLER	ACI 318: 26.6.4 AWS D1.4 IBC 1705.3.1
	TESTING OF MATERIALS		X		IBC 1705.3.2
	INSPECTION OF WELDING FOR REINFORCING STEEL				AWS D1.3 AWS D1.4 ACI 318 SECTION 26.6.4
	A. VERIFICATION OF WELDABILITY OF REINFORCING STEEL OTHER THAN ASTM A 706		X		
	B. REINFORCING STEEL IN MOMENT FRAMES AND BOUNDARY ELEMENTS	X			
	C. SHEAR REINFORCEMENT	X			
	D. OTHER REINFORCING STEEL	X			
COLD-FORMED STEEL FRAMING	SCREW ATTACHMENT, WELDING, BOLTING, ANCHORING AND FASTENING OF ELEMENTS OF SEISMIC RESISTING SYSTEM INCLUDING SHEAR WALLS, BRACES, DIAPHRAGMS, COLLECTORS (DRAG STRUTS) AND HOLDOWNS		X	NOT REQUIRED WHERE SHEATHING IS GYPSUM BOARD OR FIBERBOARD OR WHEN THE SHEATHING IS WOOD STRUCTURAL PANEL OR STEEL SHEETS ON (1) SIDE AND WITH SCREWS SPACED GREATER THAN 4" O.C.	IBC 1705..12.2, 1705.13.3 AWS D1.3
	EXTERIOR WALLS		X		IBC 1705.11.3, 1705.12.5
FIRE-RESISTANT MATERIALS	SPRAYED FIRE-RESISTANT MATERIALS		X		IBC 1705.15
	MASTIC AND INTUMESCENT COATINGS		X		IBC 1705.16
SUSPENDED CEILINGS	ANCHORAGE AND SEISMIC BRACING		X		
EMERGENCY OR STANDBY POWER SYSTEMS	ANCHORAGE OF EQUIPMENT TO STRUCTURE		X		IBC 1705.13.6
ELECTRICAL EQUIPMENT	ANCHORAGE OF EQUIPMENT TO STRUCTURE		X	SPECIAL INSPECTION ONLY REQUIRED IN SEISMIC DESIGN CATEGORY E OR F	IBC 1705.13.6
MECHANICAL AND ELECTRICAL SYSTEMS	MINIMUM CLEARANCE TO SPRINKLER PIPING OF 3"		X		IBC 1705.13.6

TESTING AND SPECIAL INSPECTION REPORTS SHALL BE PREPARED FOR EACH INSPECTION ITEM ON A DAILY BASIS WHENEVER WORK IS PERFORMED ON THAT ITEM. REPORTS SHALL BE DISTRIBUTED TO OWNER, CONTRACTOR, BUILDING OFFICIAL, ARCHITECT AND STRUCTURAL ENGINEER OF RECORD.

STRUCTURAL OBSERVATIONS SHALL BE PERFORMED BY THE STRUCTURAL ENGINEER OF RECORD OR DESIGNATED REPRESENTATIVE IN ACCORDANCE WITH IBC 1704.6. STRUCTURAL OBSERVATION SHALL BE PERFORMED AS FOLLOWS:

- » PERIODIC VISUAL OBSERVATION OF STRUCTURAL SYSTEMS FOR GENERAL CONFORMANCE TO CONSTRUCTION DOCUMENTS AT SIGNIFICANT CONSTRUCTION STAGES.
- » REVIEW OF TESTING AND INSPECTION REPORTS.
- » REPORTS SHALL BE PREPARED FOR EACH SITE VISIT AND SHALL BE DISTRIBUTED TO ARCHITECT.

GENERAL CONTRACTOR SHALL SUBMIT A WRITTEN CONTRACTOR'S STATEMENT OF RESPONSIBILITY TO THE BUILDING OFFICIAL AND OWNER PRIOR TO COMMENCEMENT OF WORK. THE CONTRACTOR'S STATEMENT OF RESPONSIBILITY SHALL INCLUDE ACKNOWLEDGMENT OF AWARENESS OF THE SPECIAL INSPECTION REQUIREMENTS CONTAINED IN THE STATEMENT OF SPECIAL INSPECTION.

anjali grant design LLC
3427 BEACON AVE S
SEATTLE 98144
ANJALI@AGRANTDESIGN.COM
206-512-4209

PCS Structural Solutions
Seattle | Tacoma | Portland
www.pcs-structural.com

3700 E MERCER WAY
BARNABIE POINT PROJECT

NO.	DATE	DESCRIPTION
01	10/22/2025	BLDG PERMIT CORRECTIONS

4 JUNE 2025
BUILDING PERMIT

PROJECT:

GENERAL NOTES

S-004

12/15/2025 12:07:26 PM C:_Revit Models\23.080 INIT Pre-12 R2024 (Central)_Dwell-PCS.rvt
© ANJALI GRANT DESIGN LLC ORIGINAL SHEET SIZE: 24" X 36"

ROOF SURFACES [1]					
EFFECTIVE WIND AREA	POSITIVE PRESSURES (PSF)	NEGATIVE PRESSURES (PSF)			
		ZONE [3]			
	ALL ZONES	1'	1	2	3
10 SF	16.0	-20.5	-35.7	-47.1	-64.1
20 SF	16.0	-20.5	-33.3	-44.0	-58.1
50 SF	16.0	-20.5	-30.2	-40.0	-50.1
100 SF	16.0	-20.5	-27.9	-37.0	-44.0

WALL SURFACES [1]				
EFFECTIVE WIND AREA	POSITIVE PRESSURE (PSF)		NEGATIVE PRESSURE (PSF)	
	ZONE [2]			
	4	5	4	5
10 SF	22.4	22.4	-24.3	-30.0
20 SF	21.4	21.4	-23.3	-28.0
50 SF	20.0	20.0	-21.9	-25.3
100 SF	19.0	19.0	-20.9	-23.3
500 SF	16.7	16.7	-18.6	-18.6

ROOF OVERHANGS [1]				
EFFECTIVE WIND AREA	NEGATIVE PRESSURE (PSF)			
	ZONE [3]			
	1'	1	2	3
10 SF	-32.3	-32.3	-43.6	-60.7
20 SF	-31.7	-31.7	-39.6	-53.7
50 SF	-30.9	-30.9	-34.3	-44.3
100 SF	-30.4	-30.4	-30.2	-37.3
500 SF	-29.0	-29.0	-20.9	-20.9

1. VALUES SHOWN IN TABLE ARE GROSS ULTIMATE WIND PRESSURES.
2. WALL ZONES ARE AS DEFINED BY FIGURE 30.3-1 IN ASCE 7-16 FOR LOW RISE BUILDINGS.
3. ROOF ZONES ARE AS DEFINED BY FIGURES 30.3-2 THROUGH 30.3-7 IN ASCE 7-16 FOR LOW RISE BUILDINGS.

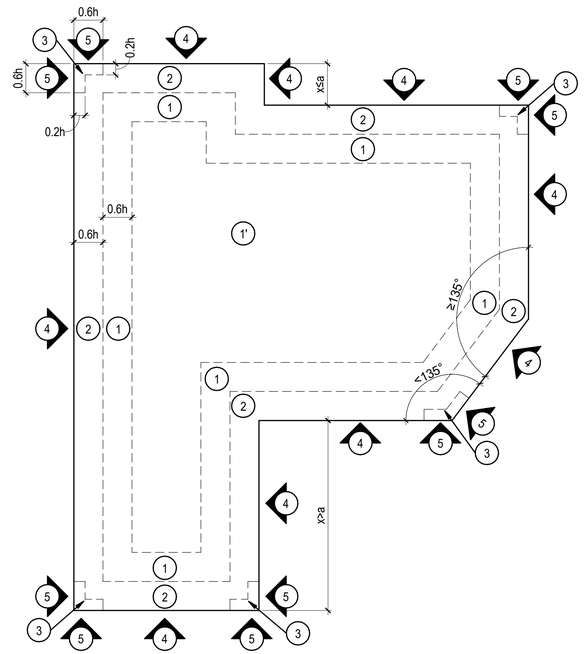

ENCLOSED AND PARTIALLY ENCLOSED FLAT/HIP/GABLE ROOF WITH θ ≤ 7° - OR MONOSLOPE ROOF WITH θ ≤ 3° - COMPONENTS AND CLADDING WIND PRESSURE ZONES

NOTES:

1. a = 10 FT; h = 48 FT.
2. IF OVERHANGS EXIST, THE EDGE DISTANCE, A, SHALL BE MEASURED FROM THE OUTSIDE EDGE OF THE OVERHANG.
3. IF x ≤ a, ZONES 3 AND 5 NEED NOT APPLY AT CORNER.
4. DIAGRAMS ARE GENERIC REPRESENTATIONS OF PROJECT WIND PRESSURES ZONES TO AID WITH APPLICATION OF WIND PRESSURES. SEE PLANS FOR EXACT REPRESENTATION OF THE BUILDING.

3427 BEACON AVE S
SEATTLE 98144
ANJALI@AGRANTDESIGN.COM
206-512-4209

anjali grant design LLC



PCS Structural Solutions
Seattle | Tacoma | Portland
www.pcs-structural.com

3700 E MERCER WAY
BARNABIE POINT PROJECT

NO.	DATE	DESCRIPTION

4 JUNE 2025
BUILDING PERMIT

PROJECT:

GENERAL NOTES

S-005

12/15/2025 12:07:30 PM C:_Revit Models\23580 HNT Pk-12 R2024 (Central)_Dwnl-PCS.rvt
© ANJALI GRANT DESIGN LLC ORIGINAL SHEET SIZE: 24" X 36"

ABBREVIATION LIST			
@	AT	HDR	HEADER
A.B.	ANCHOR BOLT	HGR	HANGER
ADD'L	ADDITIONAL	HORIZ.	HORIZONTAL
A.F.F.	ABOVE FINISH FLOOR	HSS	HOLLOW STRUCTURAL SECTION
ALT.	ALTERNATE	HT	HEIGHT
ARCH.	ARCHITECTURAL	INT.	INTERIOR
BLD'G	BUILDING	JST	JOIST
BLK'G	BLOCKING	JT	JOINT
BM	BEAM	L	ANGLE
B.O.F.	BOTTOM OF FOOTING	L.F.R.S.	LATERAL FORCE-RESISTING SYSTEM
BOT.	BOTTOM	L.L.	LIVE LOAD
BRB	BUCKLING RESTRAINED BRACE	LLH	LONG LEG HORIZONTAL
BRG	BEARING	LLV	LONG LEG VERTICAL
BTWN	BETWEEN	LOC.	LOCATION
B.U.	BUILT UP	LSL	LAMINATED STRAND LUMBER
(C=)	CAMBER	LVL	LAMINATED VENEER LUMBER
CANT.	CANTILEVER	MAX.	MAXIMUM
CFS	COLD-FORMED STEEL	M.B.	MACHINE BOLT
C.J.	CONTROL/CONSTRUCTION JOINT	MECH.	MECHANICAL
℄	CENTERLINE	MEZZ.	MEZZANINE
CLR.	CLEARANCE	MFR	MANUFACTURER
CLT	CROSS-LAMINATED TIMBER	MIN.	MINIMUM
CMU	CONCRETE MASONRY UNIT	MISC.	MISCELLANEOUS
COL.	COLUMN	MTL	METAL
CONC.	CONCRETE	MT SCREW	MASS TIMBER SCREW
CONN.	CONNECTION	N.F.	NEAR FACE
CONST.	CONSTRUCTION	N.S.	NEAR SIDE
CONT.	CONTINUOUS	NTS	NOT TO SCALE
CONTR.	CONTRACTOR	O.C.	ON CENTER
COORD.	COORDINATE	OPN'G	OPENING
C.P.	COMPLETE PENETRATION	OPP.	OPPOSITE
CTR'D	CENTERED	P.A.F.	POWDER ACTUATED FASTENER
C.Y.	CUBIC YARD	PERP.	PERPENDICULAR
DBL.	DOUBLE	ℙ	PLATE
DCW	DEMAND CRITICAL WELD	P.P.	PARTIAL PENETRATION
D.F.	DOUGLAS FIR	P.P.T.	PRESERVATIVE PRESSURE TREATED
DIA. OR Φ	DIAMETER	P.S.F.	POUNDS PER SQUARE FOOT
DIAG.	DIAGONAL	PSL	PARALLAM
DIM.	DIMENSION	P.T.	POST TENSION
D.L.	DEAD LOAD	PW.	PLYWOOD
DLT	DOWEL-LAMINATED TIMBER	REINF.	REINFORCEMENT
DWG	DRAWING	REQ'D	REQUIRED
DWL	DOWEL	SCHED.	SCHEDULE
(E)	EXISTING	SCL	STRUCTURAL COMPOSITE LUMBER
EA.	EACH	SHT'G	SHEATHING
E.F.	EACH FACE	SIM.	SIMILAR
EL.	ELEVATION	S.O.G.	SLAB ON GRADE
ELEV.	ELEVATOR	SQ.	SQUARE
ENGR	ENGINEER	STD	STANDARD
EQ.	EQUAL	STIFF.	STIFFENER
E.W.	EACH WAY	STL	STEEL
EXP.	EXPANSION	STRUCT.	STRUCTURAL
EXT.	EXTERIOR	T&B	TOP & BOTTOM
FDN	FOUNDATION	T&G	TONGUE AND GROOVE
F.F.	FAR FACE	THR'D	THREADED
FLR	FLOOR	T.O.F.	TOP OF FOOTING
F.O.M.	FACE OF MASONRY	T.O.S.	TOP OF STEEL
F.O.S.	FACE OF STUD	TRT'D	TREATED
FRM'G	FRAMING	TYP.	TYPICAL
F.R.T.	FIRE RETARDANT TREATED	U.N.O.	UNLESS NOTED OTHERWISE
F.S.	FAR SIDE	U.T.	ULTRASONIC TESTED
FTG	FOOTING	VERT.	VERTICAL
GA.	GAGE/GAUGE	W/	WITH
GALV.	GALVANIZED	W.P.	WORK POINT
GL.	GLULAM	WT	WEIGHT
GR.	GRADE	W.W.R.	WELDED WIRE REINFORCING
GWB	GYPSUM WALL BOARD		

anjali grant design LLC
3427 BEACON AVE S
SEATTLE 98144
ANJALI@AGRANTDESIGN.COM
206-512-4209



PCS Structural Solutions
Seattle | Tacoma | Portland
www.pcs-structural.com

3700 E MERCER WAY
BARNABIE POINT PROJECT

NO.	DATE	DESCRIPTION

4 JUNE 2025
BUILDING PERMIT

PROJECT:

GENERAL NOTES

S-006

12/15/2025 12:07:32 PM C:_Revit Models\23580 HNT Plx-12 R2024 (Central)_Dan4-PCS.rvt
© ANJALI GRANT DESIGN LLC ORIGINAL SHEET SIZE: 24" X 36"

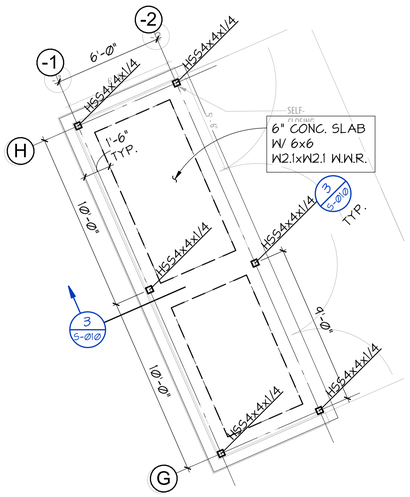

NOTES:

1. ALL STEEL EXPOSED TO WEATHER SHALL BE HOT-DIPPED GALVANIZED.
2. PROVIDE 1/2"ø WEEP HOLE 6" ABOVE BASE OF HSS COLUMNS.

TRASH ENCLOSURE

1 S-010 FOUNDATION PLAN

1/4" = 1'-0"

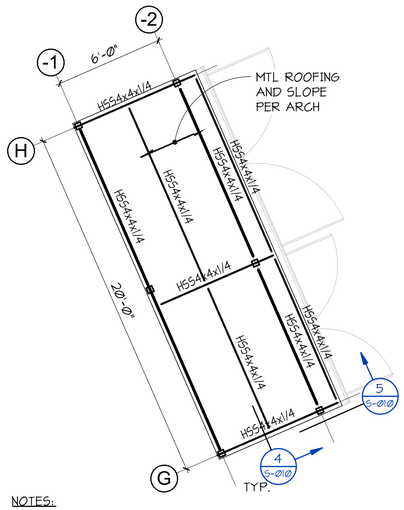

NOTES:

1. ALL STEEL EXPOSED TO WEATHER SHALL BE HOT-DIPPED GALVANIZED.
2. PROVIDE 1/2"ø WEEP HOLES IN BOTTOM FACE OF HSS ROOF MEMBERS AT 4'-0" O.C.

TRASH ENCLOSURE

2 S-010 ROOF FRAMING PLAN

1/4" = 1'-0"

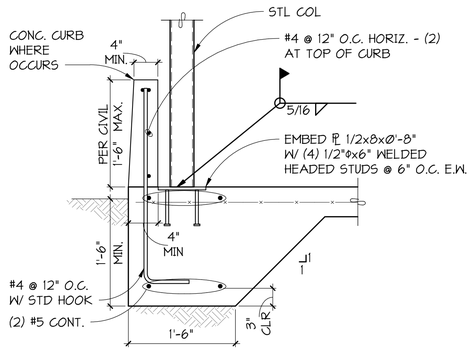

3 S-010 SECTION

1" = 1'-0"

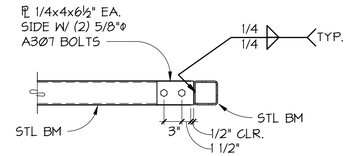

4 S-010 SECTION

1" = 1'-0"

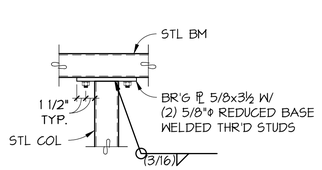

AT INTERIOR OF BEAM

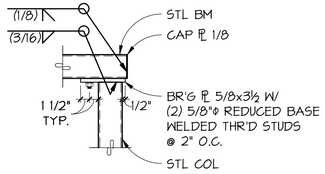

AT END OF BEAM

5 S-010 SECTION

1" = 1'-0"

3427 BEACON AVE S
SEATTLE 98144
ANJALI@AGRANTDESIGN.COM
206-512-4209

anjali grant design LLC

PCS Structural Solutions
Seattle | Tacoma | Portland
www.pcs-structural.com

3700 E MERCER WAY
BARNABIE POINT PROJECT

NO.	DATE	DESCRIPTION
	4 JUNE 2025	BUILDING PERMIT

PROJECT:

SITE STRUCTURE PARTIAL PLANS AND DETAILS

S-010

12/10/2025 12:07:14 PM C:\...Revit Models\25500 HNT Ph-12 R2024 (Central)_DanielPCS.rvt
© ANJALI GRANT DESIGN LLC ORIGINAL SHEET SIZE: 24" X 36"

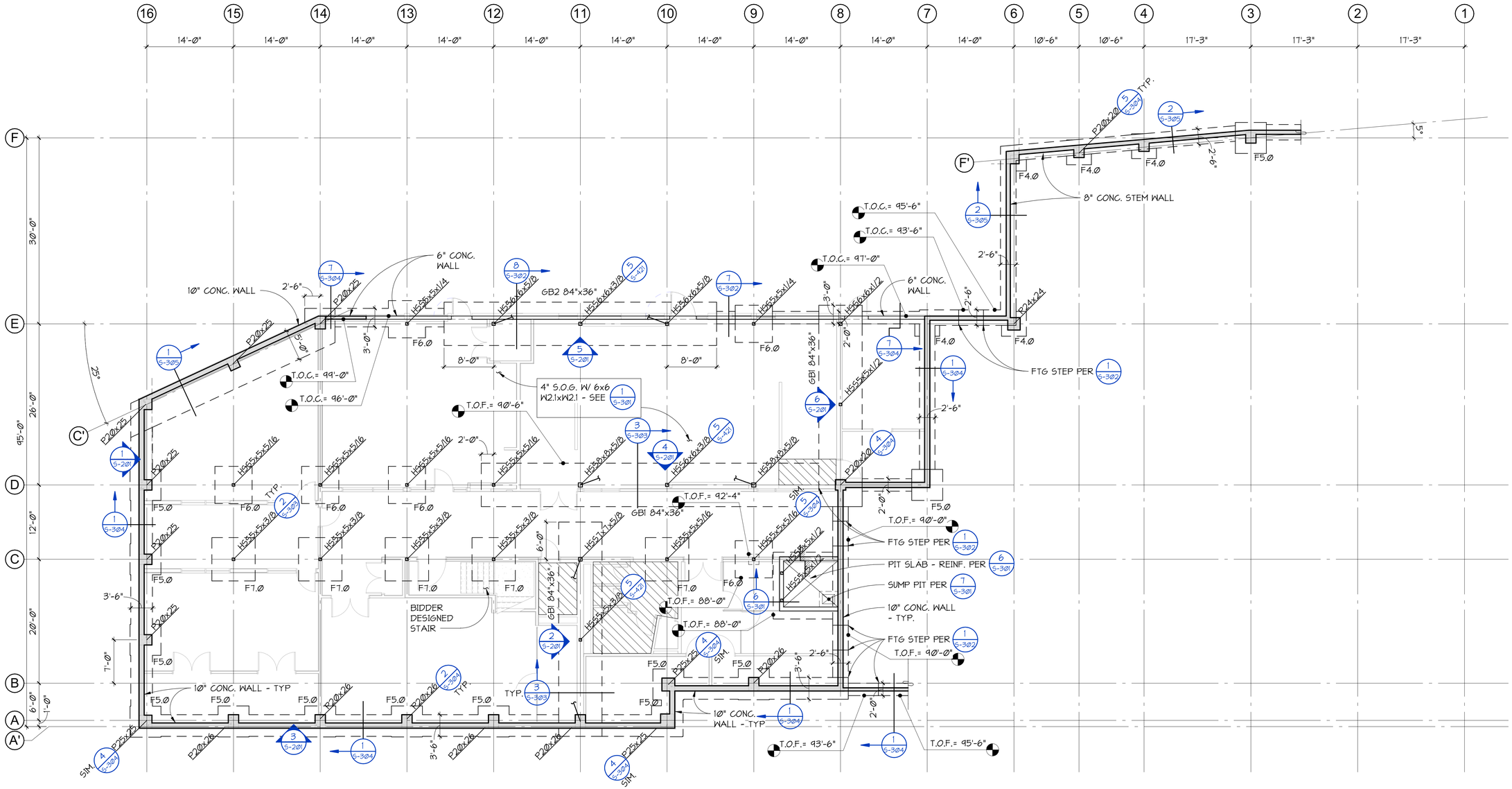

LEVEL B01 FOUNDATION & GRADE LEVEL PLAN

1/8" = 1'-0"

FOUNDATION NOTES

1. COORDINATE ALL DIMENSIONS WITH ARCHITECTURAL DRAWINGS.
2. TOP OF SLAB = 93'-0" UNLESS NOTED OTHERWISE.
3. TOP OF FOOTING ELEVATIONS = 91'-6" UNLESS NOTED OTHERWISE ON PLANS AND DETAILS.
4. "F_" INDICATES CONCRETE SPREAD FOOTING - SEE 1/S-303 FOR DETAIL AND SCHEDULE.
5. "GB-__"x_"" INDICATES CONCRETE GRADE BEAM TYPE, WIDTH AND DEPTH - SEE 3/S-303 FOR DETAIL AND SCHEDULE.
6. HSS5x5x3/8 W10x45 INDICATES STEEL COLUMNS ORIGINATING AT FOUNDATION LEVEL. ALL COLUMNS ARE CONTINUOUS TO ROOF UNLESS NOTED OTHERWISE. FOR TYPICAL ANCHOR ROD/BOLT DETAIL - SEE 1/S-403.
7. INDICATES CONCRETE WALL.
8. INDICATES CONCRETE WALL FOOTING, 1'-6" WIDE UNLESS NOTED OTHERWISE - SEE SHEETS S-302 AND S-303 FOR TYPICAL FOUNDATION DETAILS.
9. X X.XX INDICATES STEEL BRACED FRAME - SEE ELEVATIONS FOR MEMBER SIZES AND DETAILS. ALL MEMBERS AND CONNECTIONS ARE PART OF THE SEISMIC FORCE RESISTING SYSTEM.
10. FOR TYPICAL CONCRETE SLAB-ON-GRADE DETAILS - SEE SHEET S-301.
11. FOR TYPICAL PLACEMENT OF CONCRETE WALL REINFORCEMENT, STEPS IN FOOTINGS, AND FOUNDATION CONSTRUCTION JOISTS - SEE DETAILS 3/S-302, 1/S-302, AND 5/S-302.
12. NON-STRUCTURAL STUD WALLS ARE NOT SHOWN OR ARE SHOWN SCREENED. FOR LOCATIONS - SEE ARCHITECTURAL DRAWINGS.
13. P_"x"_" INDICATES CONCRETE PILASTER SIZE.
14. INDICATES DEPRESSED OR SLOPED SLAB. FOR SLOPE AND EXACT LOCATION, SEE ARCHITECTURAL DRAWINGS. MAXIMUM DEPRESSION = 1/2"

anjali grant design LLC
3427 BEACON AVE S
SEATTLE 98144
ANJALI@AGRANTDESIGN.COM
206-512-4209

PCS Structural Solutions
Seattle | Tacoma | Portland
www.pcs-structural.com

3700 E MERCER WAY
BARNABIE POINT PROJECT

NO.	DATE	DESCRIPTION
	4 JUNE 2025	BUILDING PERMIT

PROJECT:

LEVEL B01 FOUNDATION & GRADE LEVEL PLAN

S-100

12/15/2025 12:07:36 PM C:_Revit Models\23580 HNT Pk-12 R2024 (Central)_Dwell-PCS.rvt
© ANJALI GRANT DESIGN LLC ORIGINAL SHEET SIZE: 24" X 36"

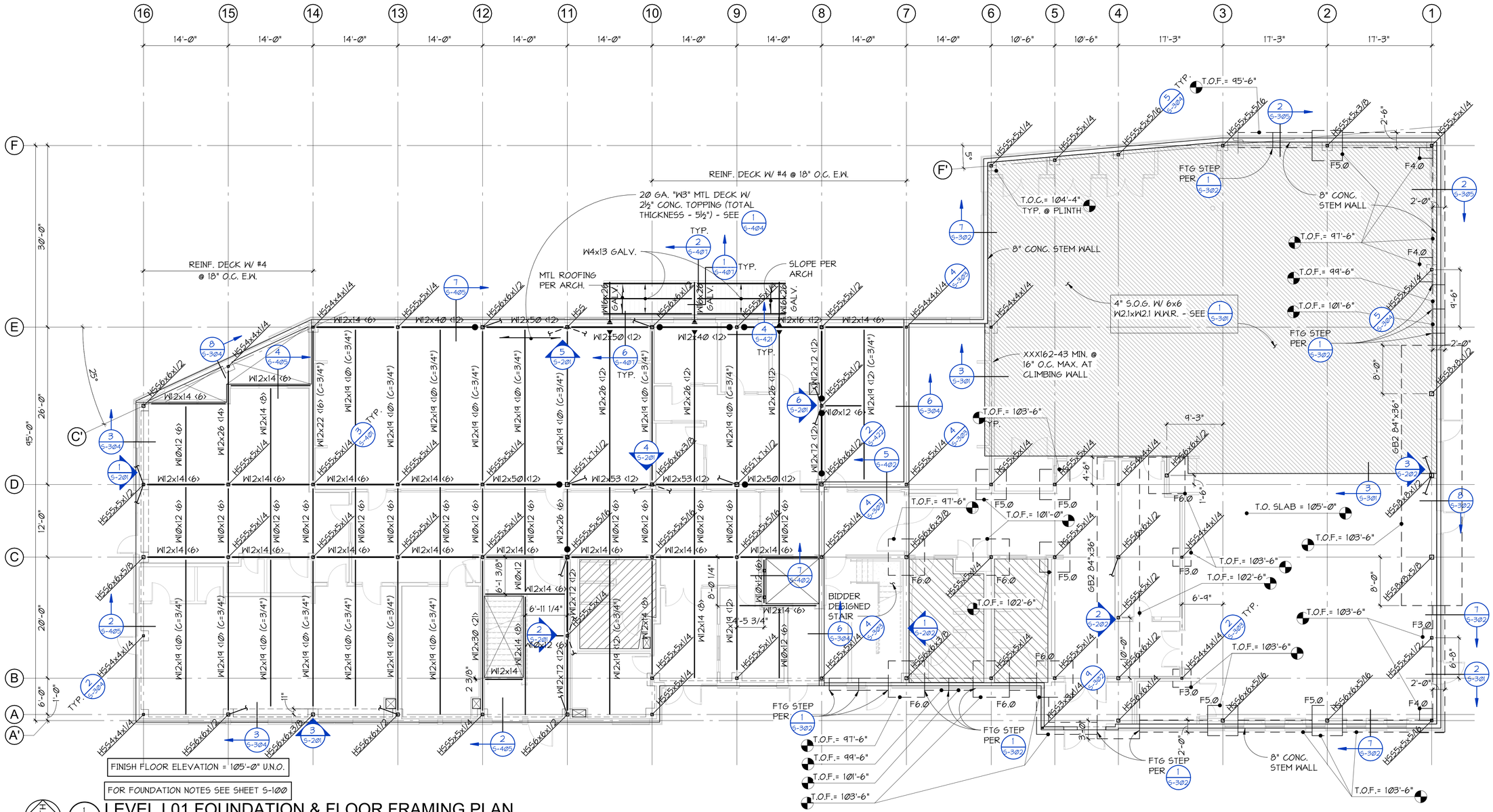

NORTH

1 / S-101 LEVEL L01 FOUNDATION & FLOOR FRAMING PLAN

1/8" = 1'-0"

FLOOR FRAMING NOTES

1. COORDINATE ALL DIMENSIONS WITH ARCHITECTURAL DRAWINGS.
2. INDICATES PENETRATION IN FLOOR OR ROOF STRUCTURE. NOT ALL OPENINGS ARE SHOWN. FOR ADDITIONAL OPENINGS IN ROOF - SEE ARCHITECTURAL AND MECHANICAL DRAWINGS. FOR DETAILS SEE 2/S-404.
3. HSS5x5x3/8 W10x45 — INDICATES STEEL COLUMNS ORIGINATING AT FLOOR LEVEL UNLESS NOTED OTHERWISE.
4. INDICATES STEEL COLUMN DISCONTINUOUS AT FLOOR OR ROOF.
5. HSS W — INDICATES COLUMN CONTINUING FROM LEVEL BELOW TO LEVEL ABOVE.
6. INDICATES SPAN DIRECTION OF METAL DECK. FOR TYPICAL COMPOSITE DECK AND METAL DECK DETAILS - SEE SHEETS S-404, S-405 AND S-406.
7. X / X.XX — INDICATES STEEL BRACED FRAME - SEE ELEVATIONS FOR MEMBER SIZES AND DETAILS. ALL MEMBERS AND CONNECTIONS ARE PART OF THE SEISMIC FORCE RESISTING SYSTEM.
8. NON-STRUCTURAL STUD WALLS ARE NOT SHOWN OR ARE SHOWN SCREENED. FOR LOCATIONS - SEE ARCHITECTURAL DRAWINGS.
9. 1500# — INDICATES MAXIMUM WEIGHT OF MECHANICAL UNIT HUNG BELOW STRUCTURE - SEE MECHANICAL AND ARCHITECTURAL FOR LOCATION.
10. 1500# — INDICATES MAXIMUM WEIGHT OF MECHANICAL UNIT - SEE MECHANICAL AND ARCHITECTURAL FOR LOCATION AND HOUSEKEEPING PADS.
11. FOR TYPICAL STEEL CONNECTION DETAILS - SEE SHEET S-401. SEE BRACED FRAME ELEVATIONS FOR CONNECTION CALLOUTS. ALL MEMBERS AND CONNECTIONS THAT ARE PART OF A BRACED FRAME SHALL BE CONSIDERED PART OF THE LATERAL FORCE-RESISTING SYSTEM.
12. INDICATES DEPRESSED OR SLOPED COMPOSITE DECK. FOR SLOPE AND EXACT LOCATION, SEE ARCHITECTURAL DRAWINGS. MAXIMUM DEPRESSION = 1/2"

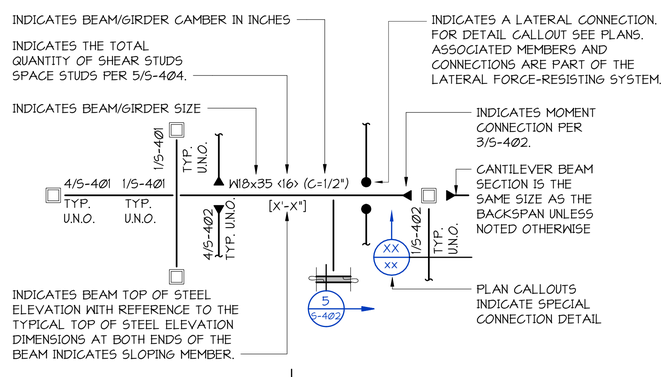

anjali grant design LLC
3427 BEACON AVE S
SEATTLE 98144
ANJALI@AGRANTDESIGN.COM
206-512-4209

PCS Structural Solutions
Seattle | Tacoma | Portland
www.pcs-structural.com

3700 E MERCER WAY
BARNABIE POINT PROJECT

NO.	DATE	DESCRIPTION
		4 JUNE 2025 BUILDING PERMIT

PROJECT:

LEVEL L01 FOUNDATION & FLOOR FRAMING PLAN

S-101

12/15/2025 12:07:41 PM C:_Revit Models\23580 HNT Pls-12 R2024 (Central)_David-PCS.rvt
© ANJALI GRANT DESIGN LLC ORIGINAL SHEET SIZE: 24" X 36"

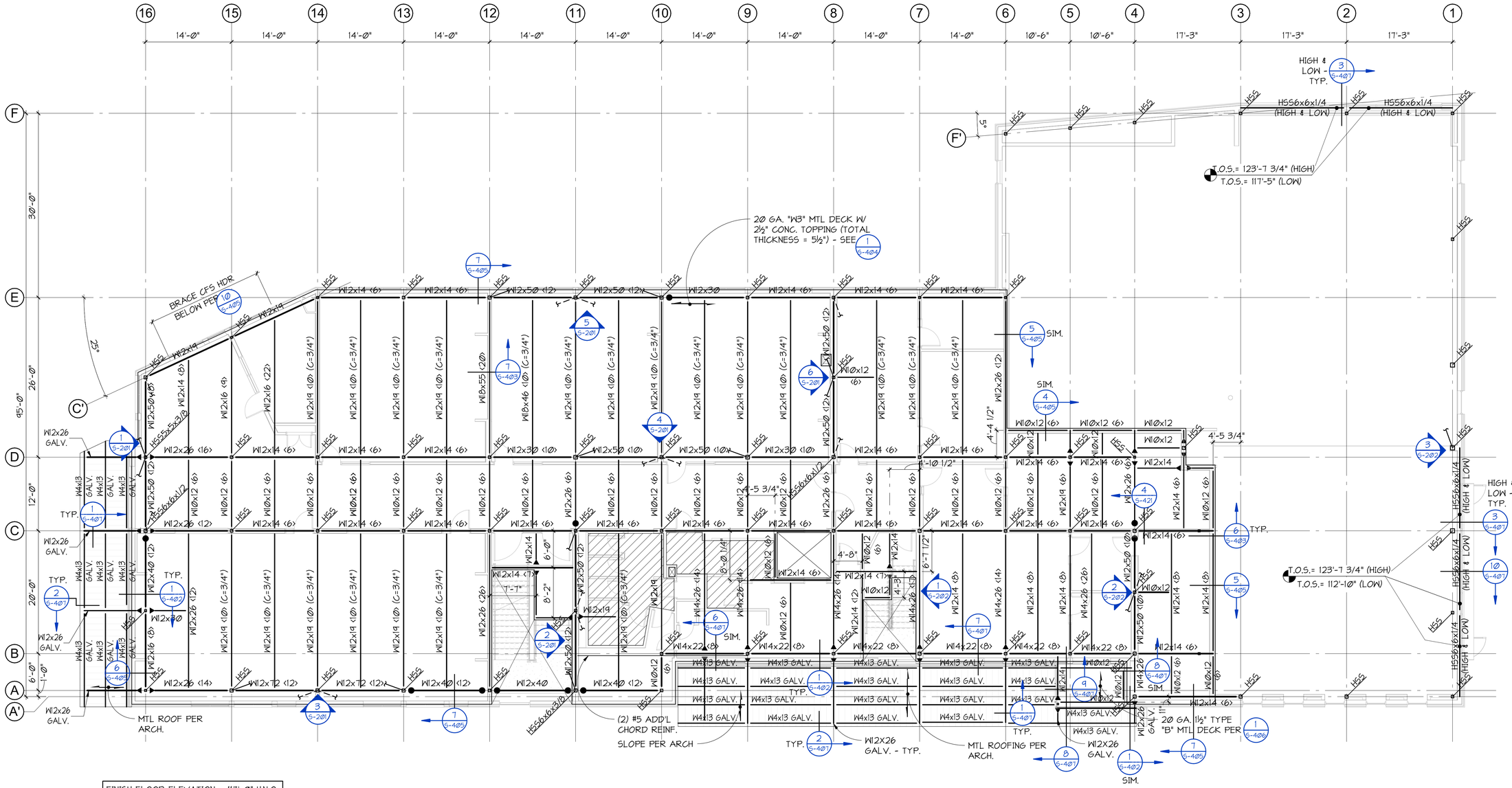

FINISH FLOOR ELEVATION = 117'-0" U.N.O.

SEE SHEETS S-101 AND S-104 FOR PLAN NOTES

NORTH

1 S-102 LEVEL L02 FLOOR FRAMING PLAN

1/8" = 1'-0"

anjali grant design LLC
3427 BEACON AVE S
SEATTLE 98144
ANJALI@AGRANTDESIGN.COM
206-512-4209

PCS Structural Solutions
Seattle | Tacoma | Portland
www.pcs-structural.com

3700 E MERCER WAY
BARNABIE POINT PROJECT

NO.	DATE	DESCRIPTION
	4 JUNE 2025	BUILDING PERMIT

PROJECT:

LEVEL L02 FLOOR FRAMING PLAN

S-102

12/15/2025 12:07:43 PM C:_Revit Models\23580 HNT Pk-12 R2024 (Central)_Dan4-PCS.rvt
© ANJALI GRANT DESIGN LLC ORIGINAL SHEET SIZE: 24" X 36"

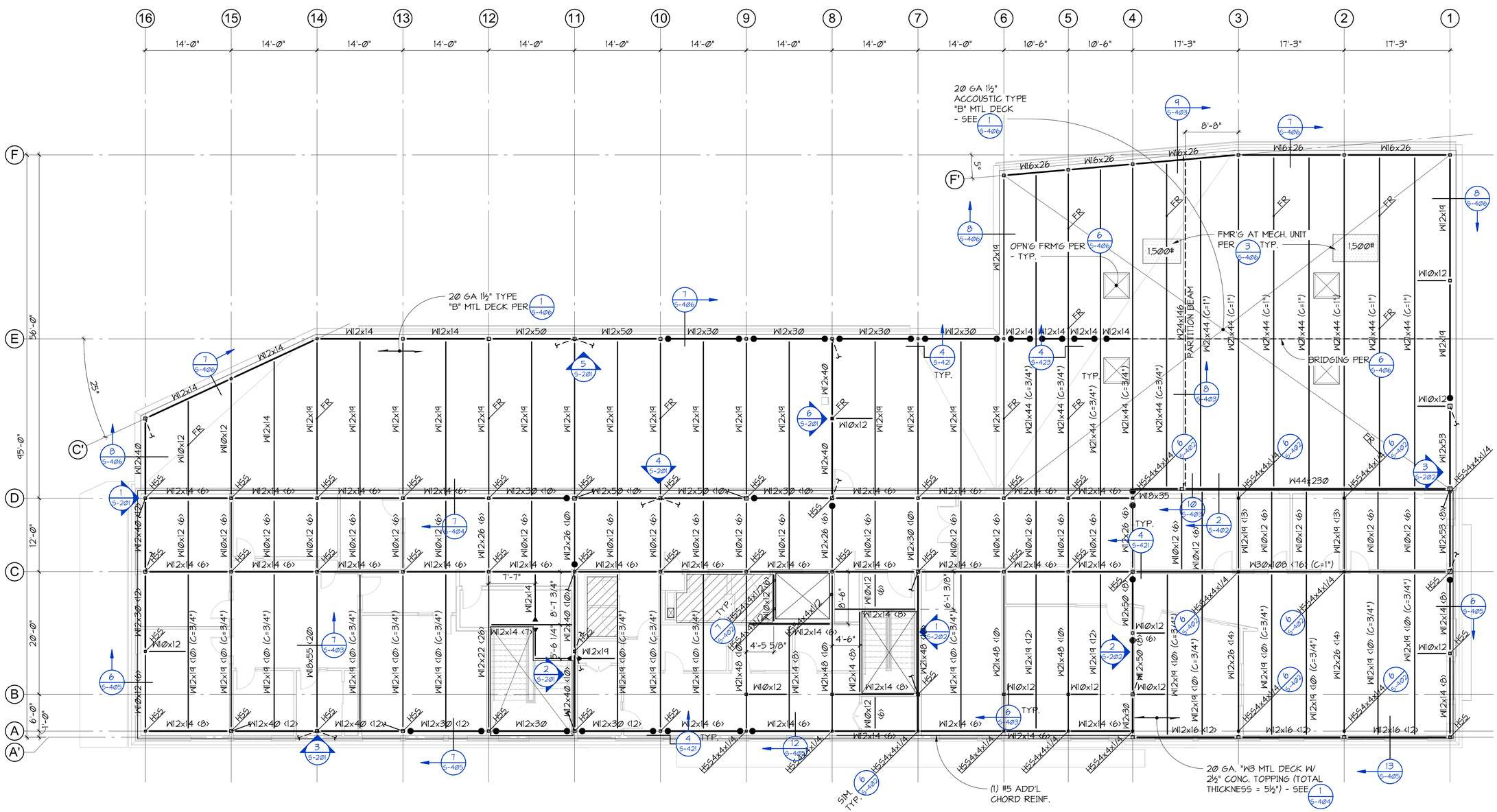

FINISH FLOOR ELEVATION = 129'-0" U.N.O.

SEE SHEETS S-101 AND S-104 FOR PLAN NOTES

NORTH

1 S-103 LEVEL L03 FLOOR & LOW ROOF FRAMING PLAN

1/8" = 1'-0"

3427 BEACON AVE S
SEATTLE 98144
ANJALI@AGRANTDESIGN.COM
206-512-4209

anjali grant design LLC

PCS Structural Solutions
Seattle | Tacoma | Portland
www.pcs-structural.com

3700 E MERCER WAY
BARNABIE POINT PROJECT

NO.	DATE	DESCRIPTION

4 JUNE 2025
BUILDING PERMIT

PROJECT:

LEVEL L03 FLOOR & LOW ROOF FRAMING PLAN

S-103

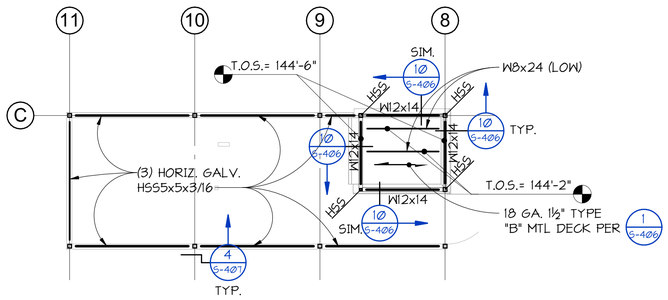

NORTH 2 S-104 1/8" = 1'-0"

PARTIAL PLAN - UPPER ROOF

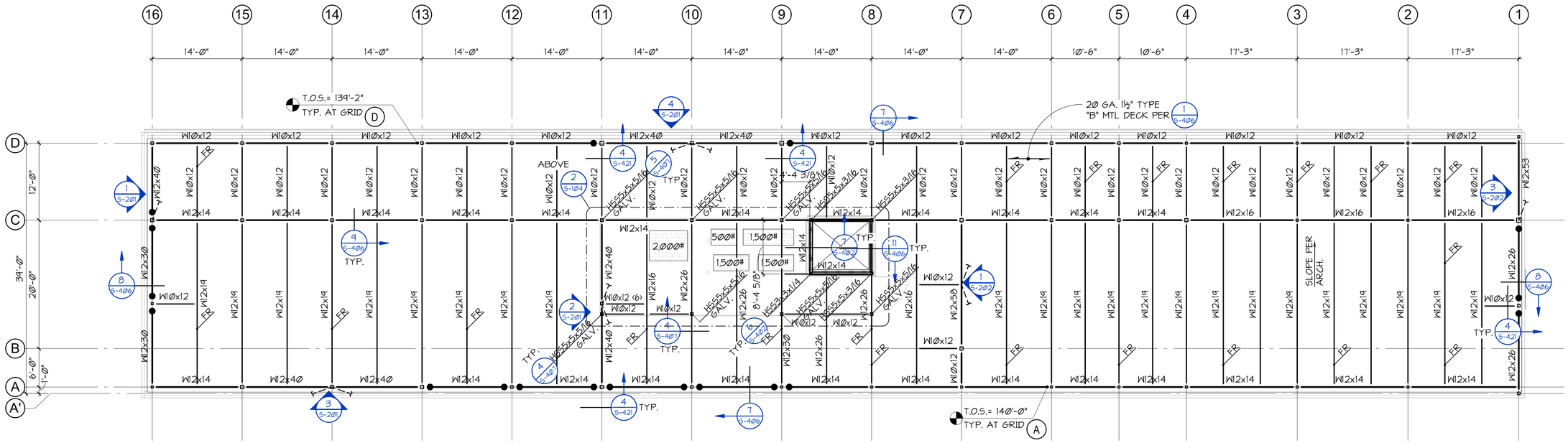

NORTH 1 S-104 1/8" = 1'-0"

ROOF FRAMING PLAN

ROOF FRAMING NOTES

1. COORDINATE ALL DIMENSIONS WITH ARCHITECTURAL DRAWINGS.
2. INDICATES PENETRATION IN FLOOR OR ROOF STRUCTURE. NOT ALL OPENINGS ARE SHOWN. FOR ADDITIONAL OPENINGS IN ROOF SEE ARCHITECTURAL AND MECHANICAL DRAWINGS. FOR SUPORRT OF OPENINGS SEE 2/S-406 AND 3/S-406.
3. INDICATES SPAN DIRECTION OF METAL DECK. FOR TYPICAL METAL DECK DETAILS - SEE SHEET S-406.
4. INDICATES STEEL COLUMN DISCONTINUOUS AT FLOOR OR ROOF.
5. INDICATES STEEL BRACED FRAME. SEE ELEVATIONS FOR MEMBER SIZES AND DETAILS. ALL MEMBERS AND CONNECTIONS ARE PART OF THE SEISMIC FORCE RESISTING SYSTEM.
6. 1500# INDICATES MAXIMUM WEIGHT OF MECHANICAL UNIT HUNG BELOW STRUCTURE - SEE MECHANICAL AND ARCHITECTURAL FOR LOCATION.
7. 1500# INDICATES MAXIMUM WEIGHT OF MECHANICAL UNIT - SEE MECHANICAL AND ARCHITECTURAL FOR LOCATION AND HOUSEKEEPING PADS. SEE 3/S-406 FOR ADDED STEEL FRAMING AT UNIT.
8. FOR TYPICAL STEEL CONNECTION DETAILS - SEE SHEET S-401. SEE BRACED FRAME ELEVATIONS FOR CONNECTION CALLOUTS. ALL MEMBERS AND CONNECTIONS THAT ARE PART OF A BRACED FRAME SHALL BE CONSIDERED PART OF THE LATERAL FORCE-RESISTING SYSTEM.

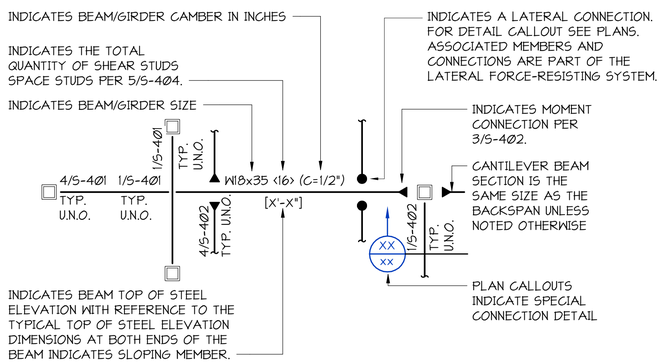

9. FR INDICATES APPROXIMATE LOCATION OF FALL RESTRAINT ON ROOF STRUCTURE. SEE 5/S-403 FOR ADDITIONAL REQUIREMENTS. SEE ARCH FOR LOCATIONS.
10. FOR ROOF MOUNTED BASKETBALL HOOPS SEE ARCHITECTURAL.
11. FOR ROOF ACCESS STAIR SUPPORT POSTS - SEE 1/S-408. COORDINATE LOCATIONS WITH ARCH AND MANUFACTURER.

12/15/2025 12:07:52 PM C:_Revit Models\25300 HNT Ph-12 R2024 (Central)_Dwahl-PCS.rvt
© ANJALI GRANT DESIGN LLC ORIGINAL SHEET SIZE: 24" X 36"

3427 BEACON AVE S
SEATTLE 98144
ANJALI@AGRANTDESIGN.COM
206-512-4209
anjali grant design LLC



PCS Structural Solutions
Seattle | Tacoma | Portland
www.pcs-structural.com

3700 E MERCER WAY
BARNABIE POINT PROJECT

NO.	DATE	DESCRIPTION
	4 JUNE 2025	BUILDING PERMIT

PROJECT:

ROOF FRAMING PLAN

S-104

BUCKLING RESTRAINED BRACE SCHEDULE

BRACED FRAME	BRACE TYPE	BRACE AXIAL FORCE (KIPS)	AREA OF STEEL CORE (IN^2)	STIFFNESS MODIFICATION FACTOR (KF)	MAXIMUM INELASTIC STORY DRIFT ΔM (in.)	MAXIMUM CASING SIZE (INxIN)	REDUNDANCY (ρ)
BF-1	BRB-1	40	2.0	1.35	1.2	8x8	1.3
	BRB-2	50	2.0	1.35	1.0	8x8	
	BRB-3	65	3.0	1.30	1.0	10x10	
BF-2	BRB-4	15	2.0	1.35	0.5	8x8	
	BRB-5	45	2.0	1.25	1.0	8x8	
	BRB-6	55	2.5	1.35	0.75	8x8	
	BRB-7	55	2.5	1.45	0.5	8x8	
BF-3	BRB-8	30	2.0	1.30	0.75	8x8	
	BRB-9	60	2.5	1.35	1.0	8x8	
	BRB-10	130	5.5	1.25	1.0	10x10	
BF-4	BRB-11	35	2.25	1.45	0.75	8x8	
	BRB-12	85	3.25	1.30	1.0	10x10	
	BRB-13	75	3.25	1.30	0.75	10x10	
	BRB-14	75	3.25	1.35	0.5	10x10	
BF-5	BRB-15	65	2.5	1.35	1.0	8x8	
	BRB-16	75	3.0	1.30	1.0	8x8	
	BRB-17	75	3.0	1.35	0.5	8x8	
BF-6	BRB-18	35	2.0	1.30	1.0	8x8	
	BRB-19	40	2.5	1.40	0.75	8x8	
BF-7	BRB-20	20	2.5	1.50	0.5	8x8	
BF-8	BRB-21	90	3.5	1.40	1.0	10x10	
	BRB-22	125	6.0	1.55	0.75	10x10	
BF-9	BRB-23	35	2.0	1.40	1.0	8x8	
	BRB-24	70	3.0	1.20	2.1	10x10	

BUCKLING RESTRAINED BRACE SCHEDULE NOTES:

1. ALL MEMBERS AND CONNECTIONS ARE PART OF THE LATERAL FORCE-RESISTING SYSTEM.
2. BUCKLING RESTRAINED BRACES ARE TO BE TESTED PER THE PROVISIONS OF THE AISC341-16. SUPPLIER TO SUBMIT PROOF OF EACH BRACES COMPLIANCE WITH THE QUALIFIED LOAD AND STRAIN RANGES.
3. Pu GIVEN IS THE GOVERNING CODE LEVEL FORCE IN THE BRACE, USING LRFD FORCE LEVELS.
   Pu ≤ Ø.9 x Asc x Fymin.
4. Fysc IS THE ACTUAL YIELD STRESS OF THE STEEL CORE AS DETERMINED BY COUPON TESTING. 38ksi ≤ Fysc ≤ 46ksi. CHARPY TESTING REQUIRED WHEN THICKNESS OF CORE MATERIAL EXCEEDS 2".
5. BRACE STIFFNESS Keff TO BE KFxAscxE/Lwp±1Ø%. WHERE THE VALUES FOR STIFFNESS MODIFICATION FACTOR (KF) AND Asc ARE TAKEN FROM THE TABLE AND Lwp IS THE WORKPOINT TO WORKPOINT LENGTH OF THE BRACE.
6. BRACE STRAINS TO BE ESTIMATED USING 2xΔ_MDRIFTS.
7. MAXIMUM β NOT TO EXCEED 2.1Ø. MAXIMUM β NOT TO EXCEED 1.45.
8. WELDED, BOLTED, SCREWED OR SHOT IN ATTACHMENTS FOR NON-STRUCTURAL ELEMENTS ARE PROHIBITED IN THE PROTECTED ZONE - SEE 2/S-42Ø.

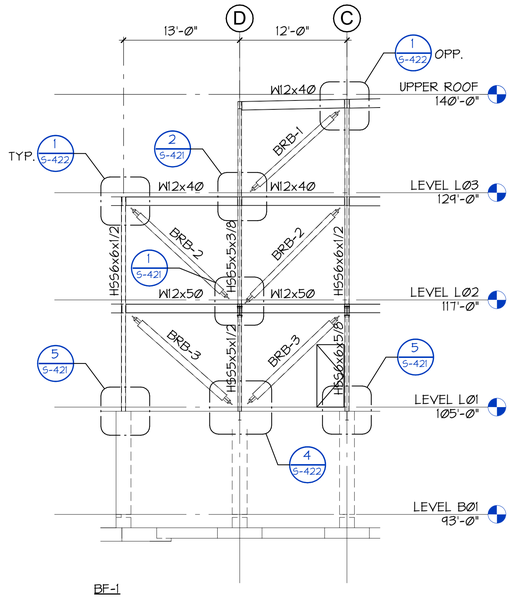

BF-1

1 S-201 BRACED FRAME ELEVATION

1/8" = 1'-Ø"

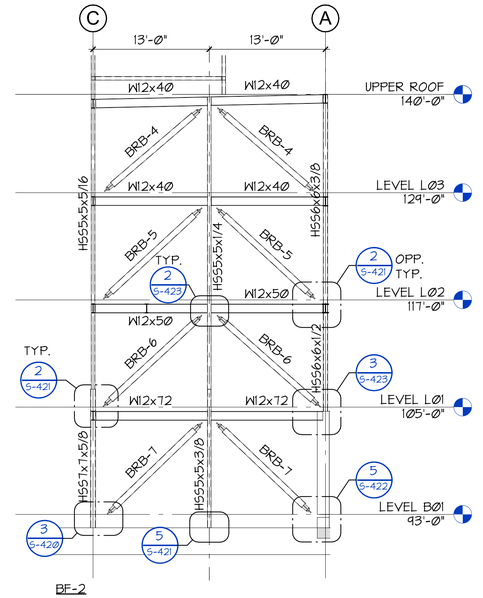

BF-2

2 S-201 BRACED FRAME ELEVATION

1/8" = 1'-Ø"

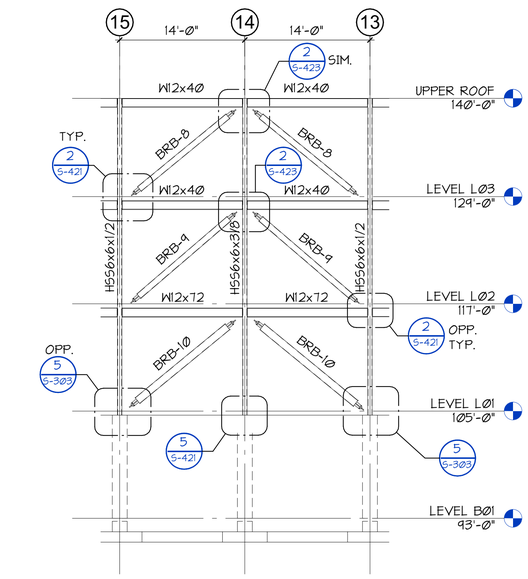

BF-3

3 S-201 BRACED FRAME ELEVATION

1/8" = 1'-Ø"

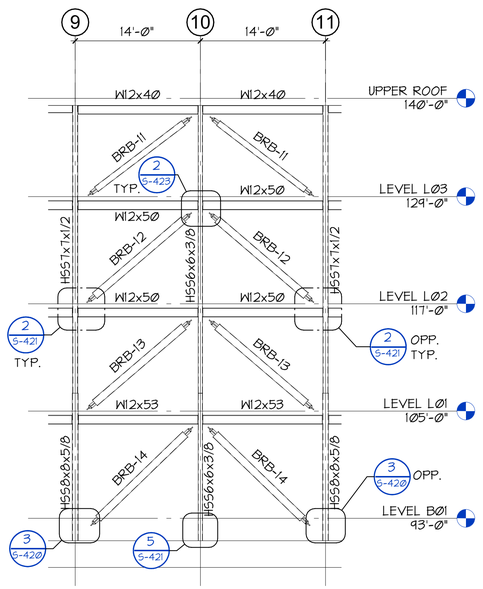

BF-4

4 S-201 BRACED FRAME ELEVATION

1/8" = 1'-Ø"

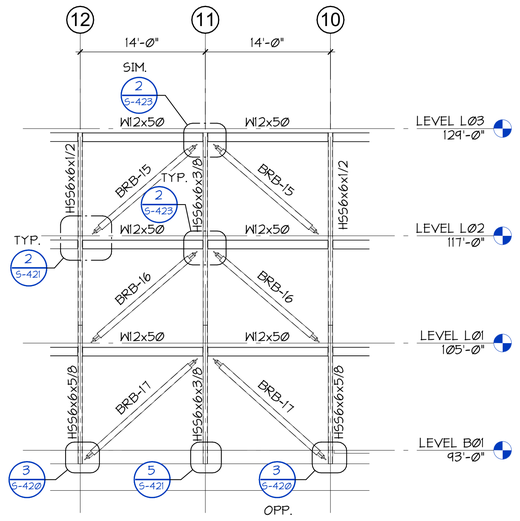

BF-5

5 S-201 BRACED FRAME ELEVATION

1/8" = 1'-Ø"

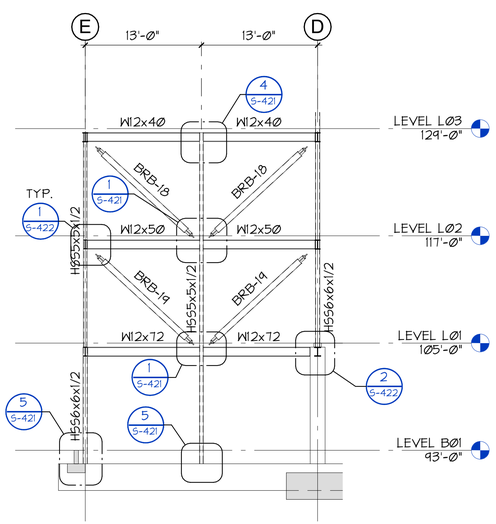

BF-6

6 S-201 BRACED FRAME ELEVATION

1/8" = 1'-Ø"

12/15/2025 12:07:54 PM C:\...\Revit Models\23580 HNT Po-12 R2024 (Central)_DanH-PCS.rvt
© ANJALI GRANT DESIGN LLC ORIGINAL SHEET SIZE: 24" X 36"

anjali grant design LLC
3427 BEACON AVE S
SEATTLE 98144
ANJALI@AGRANTDESIGN.COM
206-512-4209

PCS Structural Solutions
Seattle | Tacoma | Portland
www.pcs-structural.com

3700 E MERCER WAY
BARNABIE POINT PROJECT

NO.	DATE	DESCRIPTION
		4 JUNE 2025 BUILDING PERMIT

PROJECT:

BRACED FRAME ELEVATIONS

S-201

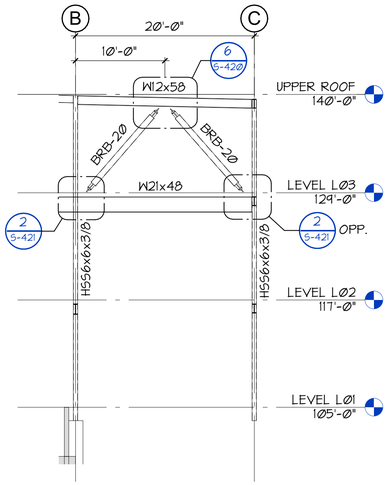

BF-7

1 S-202 BRACE FRAME ELEVATION

1/8" = 1'-0"

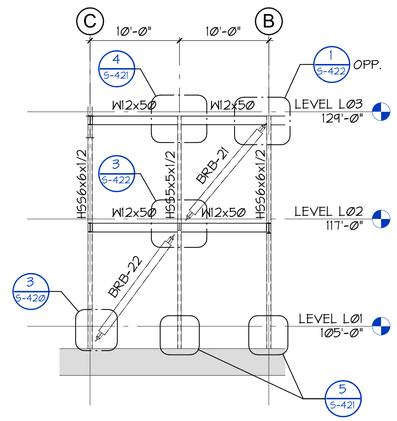

BF-8

2 S-202 BRACED FRAME ELEVATION

1/8" = 1'-0"

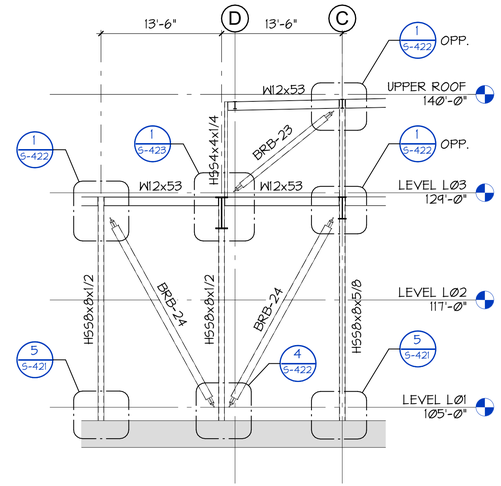

BF-9

3 S-202 BRACED FRAME ELEVATION

1/8" = 1'-0"

anjali grant design LLC
3427 BEACON AVE S
SEATTLE 98144
ANJALI@AGRANTDESIGN.COM
206-512-4209

PCS Structural Solutions
Seattle | Tacoma | Portland
www.pcs-structural.com

3700 E MERCER WAY
BARNABIE POINT PROJECT

NO.	DATE	DESCRIPTION

4 JUNE 2025
BUILDING PERMIT

PROJECT:

BRACED FRAME ELEVATIONS

S-202

12/15/2025 12:07:57 PM C:_Revit Models\23560 HNT Pk-12 R2024 (Central)_Dan4-PCS.rvt
© ANJALI GRANT DESIGN LLC ORIGINAL SHEET SIZE: 24" X 36"

NOTE:
LOCATE JOINTS AT NON-BEARING WALLS WHERE POSSIBLE - SUBMIT PATTERN TO ARCHITECT FOR APPROVAL.

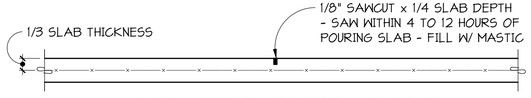

TYPICAL CONTROL JOINT FOR SLAB-ON-GRADE

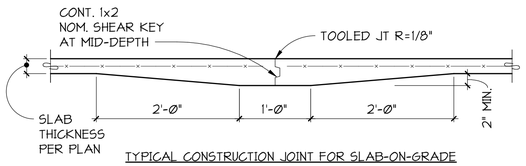

TYPICAL CONSTRUCTION JOINT FOR SLAB-ON-GRADE

1 S-301 **DETAIL** NO SCALE

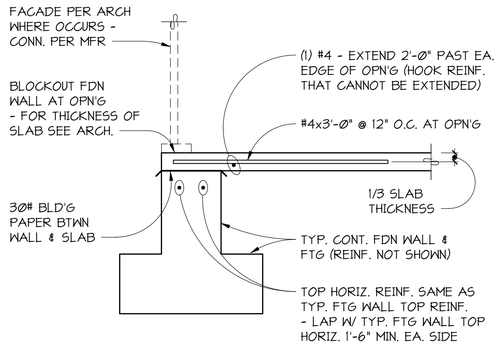

TYPICAL SLAB AT EXTERIOR OPENING

2 S-301 **SECTION** NO SCALE

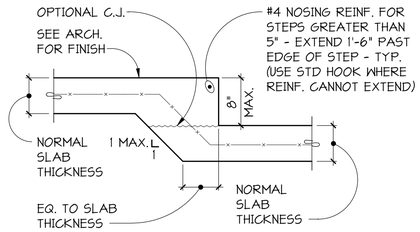

TYPICAL 8" OR LESS SLAB STEPS OR DEPRESSIONS

3 S-301 **DETAIL** NO SCALE

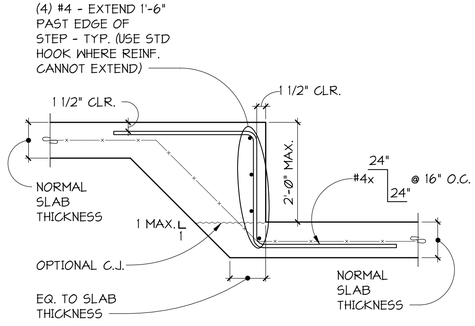

TYPICAL 8" TO 24" SLAB STEPS OR DEPRESSIONS

4 S-301 **DETAIL** NO SCALE

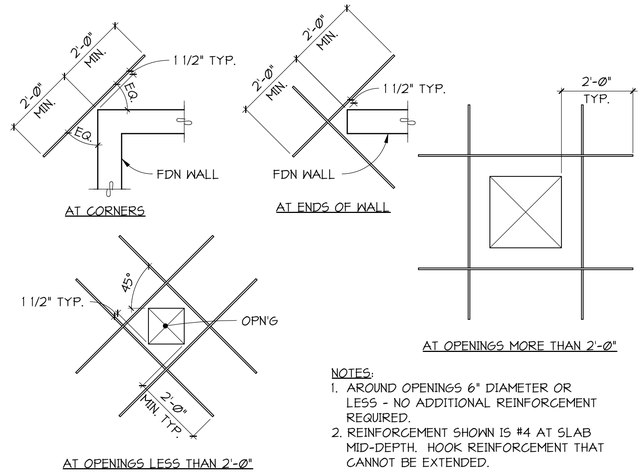

NOTES:
1. AROUND OPENINGS 6" DIAMETER OR LESS - NO ADDITIONAL REINFORCEMENT REQUIRED.
2. REINFORCEMENT SHOWN IS #4 AT SLAB MID-DEPTH. HOOK REINFORCEMENT THAT CANNOT BE EXTENDED.

TYPICAL SLAB-ON-GRADE DISCONTINUITY REINFORCEMENT

5 S-301 **PLAN DETAILS** NO SCALE

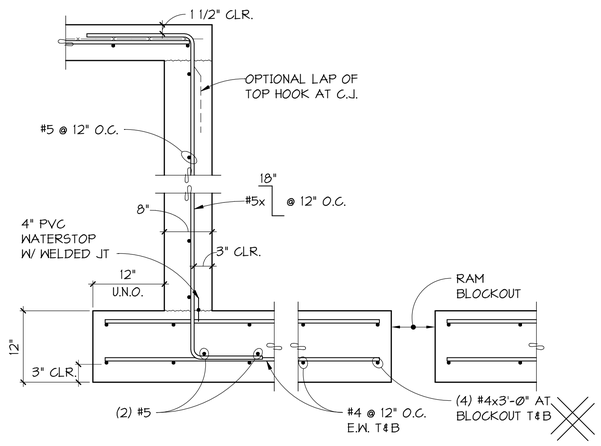

TYPICAL ELEVATOR PIT

6 S-301 **SECTION** NO SCALE

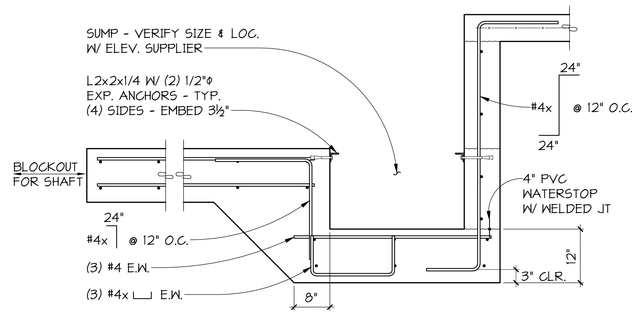

TYPICAL ELEVATOR PIT SUMP

7 S-301 **SECTION** NO SCALE

3427 BEACON AVE S
SEATTLE 98144
ANJALI@AGRANTDESIGN.COM
206-512-4209

anjali grant design LLC

33519 ANJALI M. GRANT STATE OF WASHINGTON REGISTERED PROFESSIONAL ENGINEER

PCS Structural Solutions
Seattle | Tacoma | Portland
www.pcs-structural.com

3700 E MERCER WAY
BARNABIE POINT PROJECT

NO.	DATE	DESCRIPTION
	4 JUNE 2025	BUILDING PERMIT

PROJECT:

FOUNDATION DETAILS

S-301

12/5/2025 12:07:59 PM C:_Revit Models\23500 HNT Ph 12 R2024 (Central)_Dsmit.RVT
© ANJALI GRANT DESIGN LLC ORIGINAL SHEET SIZE: 24" X 36"

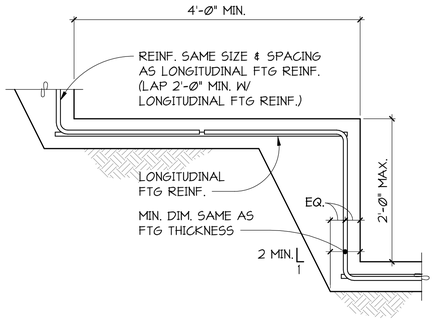

TYPICAL STEPPED FOOTING

1 DETAIL S-302 NO SCALE

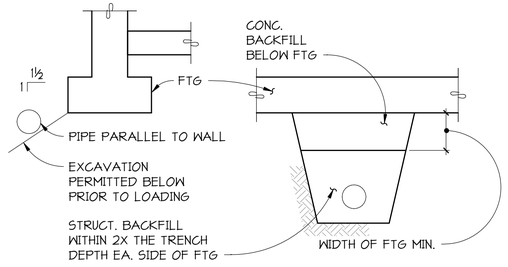

TYPICAL FOR PARALLEL PIPES ADJACENT TO FOOTINGS

TYPICAL FOR PERPENDICULAR PIPES UNDER FOOTINGS

NOTES:
1. FOUNDATIONS SHALL NOT BE LOADED PRIOR TO COMPLETING STRUCTURAL BACKFILL UNDER AND NEAR FOOTINGS.
2. CONCRETE BACKFILL SHALL BE USED UNDER FOOTINGS WHERE 95% COMPACTION CANNOT BE ACCOMPLISHED.
3. ALL STRUCTURAL BACKFILL NOTED SHALL BE COMPACTED TO 95% OF MAXIMUM DENSITY PER ASTM.
4. A PIPE SLEEVE SHALL BE PROVIDED FOR SHALLOW PIPES CAST IN CONCRETE.
5. PIPES SHALL NOT BE PLACED IN THE FOOTING WITHOUT SPECIFIC APPROVAL FROM THE ENGINEER.
6. FOR VARIATIONS CONTACT ENGINEER.

2 SECTION S-302 NO SCALE

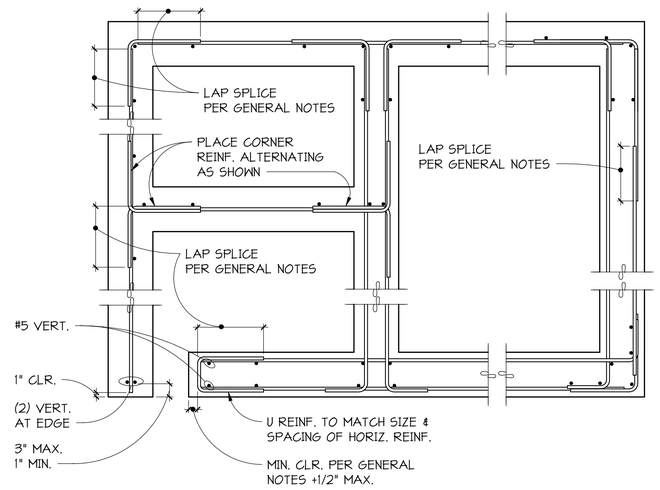

NOTES:
1. VERTICAL REINFORCEMENT SHOWN IS ADDITIONAL IF NORMAL STEM WALL REINFORCEMENT IS NOT IN PROPER LOCATION.
2. CORNER REINFORCEMENT IS SAME SIZE AND SPACING AS HORIZONTAL REINFORCEMENT.
3. STANDARD HOOK MAY BE SUBSTITUTED FOR CORNER REINFORCEMENT - SEE NOTE #5.
4. REINFORCEMENT AT ALL CORNERS, ENDS, AND INTERSECTIONS OF WALLS SHALL BE PLACED IN ACCORDANCE WITH APPROPRIATE DETAIL SHOWN.
5. USE STANDARD HOOK FOR EMBEDMENT LESS THAN 24" PAST FACE OF WALL.

TYPICAL REINFORCEMENT PLACEMENT FOR CAST IN PLACE CONCRETE WALLS AND STEM WALLS

3 DETAIL S-302 NO SCALE

TYPICAL AT OPENINGS IN CAST IN PLACE CONCRETE WALLS

4 SECTION S-302 NO SCALE

TYPICAL AT VERTICAL WALL JOINTS

NOTE:
OBTAIN APPROVAL OF ENGINEER FOR LOCATION OF ANY CONSTRUCTION JOINT.

TYPICAL AT CONCRETE GRADE BEAMS AND FOOTINGS

TYPICAL CONSTRUCTION JOINTS FOR CAST IN PLACE CONCRETE WALLS, GRADE BEAMS, AND FOOTINGS

5 SECTION S-302 NO SCALE

WIDTH "W"	"T"	REINFORCEMENT "A" CONTINUOUS	REINFORCEMENT "B"
1'-6"	10"	(2) #5	---
2'-0"	12"	(2) #5	---
2'-6"	12"	(3) #5	#5 @ 24" O.C.
3'-0"	14"	(4) #5	#5 @ 24" O.C.
3'-6"	14"	(4) #5	#5 @ 18" O.C.

NOTES:
1. FOOTINGS SHALL BEAR ON UNDISTURBED OR COMPACTED MATERIAL PER GENERAL NOTES.
2. EXTEND FOOTINGS 6" MINIMUM PAST ENDS OF WALL UNLESS OTHERWISE NOTED.
3. WHERE FOOTINGS CHANGE WIDTHS LAP REINFORCEMENT "A". LAP SPLICE PER GENERAL NOTES.

TYPICAL CONTINUOUS FOOTING

6 SECTION S-302 NO SCALE

TYPICAL FOUNDATION AT EXTERIOR COLD-FORMED STEEL STUD WALL

7 SECTION S-302 NO SCALE

8 SECTION S-302 1" = 1'-0"

TYPICAL BEARING PLATE

BEARING PLATE AT CORNER

TYPICAL STEEL COLUMN BASE AT CONTINUOUS FOUNDATION WALL

9 SECTION S-302 NO SCALE

12/15/2025 12:08:01 PM C:\...\Revit Models\23580 HNT Ph-12 R2024 (Central)_DanH.PCS.rvt
© ANJALI GRANT DESIGN LLC ORIGINAL SHEET SIZE: 24" X 36"

3427 BEACON AVE S
SEATTLE 98144
ANJALI@AGRANTDESIGN.COM
206-512-4209
anjali grant design LLC

JAMES M. LAMBERT
33519
REGISTERED PROFESSIONAL ENGINEER
PCS Structural Solutions
Seattle | Tacoma | Portland
www.pcs-structural.com

3700 E MERCER WAY
BARNABIE POINT PROJECT

NO.	DATE	DESCRIPTION
	4 JUNE 2025	BUILDING PERMIT

PROJECT:

FOUNDATION DETAILS

S-302

MARK	DIMENSIONS			REINFORCEMENT EACH WAY - UNLESS NOTED OTHERWISE
	"W"	"L"	"T"	
F3.0	3'-0"	3'-0"	12"	(4) #4
F4.0	4'-0"	4'-0"	12"	(4) #5
F5.0	5'-0"	5'-0"	14"	(5) #5
F6.0	6'-0"	6'-0"	14"	(6) #6
F7.0	7'-0"	7'-0"	18"	(7) #6

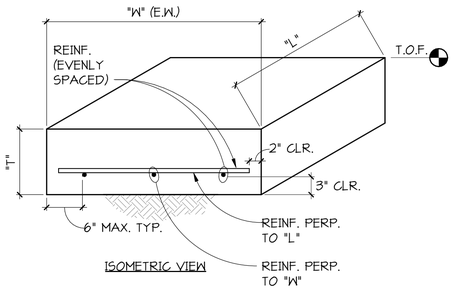

ISOMETRIC VIEW

NOTES:
1. CENTER ALL FOOTINGS ON COLUMN ABOVE EXCEPT AS SHOWN OTHERWISE.
2. FOOTINGS SHALL BEAR ON UNDISTURBED OR COMPACTED MATERIAL PER GENERAL NOTES. DESIGN BEARING PRESSURE IS 3000 POUNDS PER SQUARE FOOT.

TYPICAL CONCRETE SPREAD FOOTING

1 / S-303 SECTION
NO SCALE

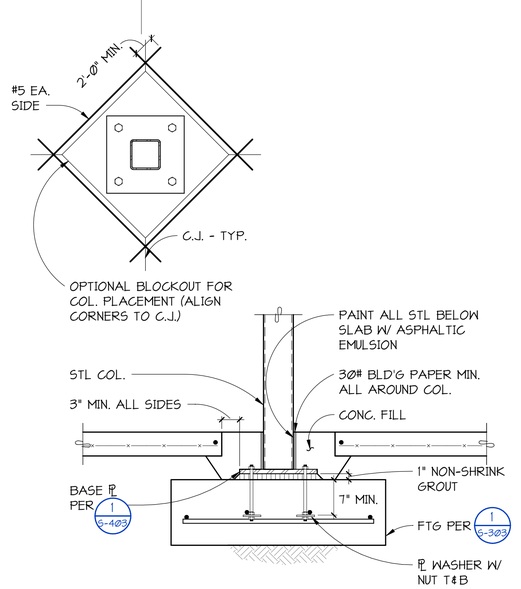

TYPICAL STEEL COLUMN AT SPREAD FOOTING

2 / S-303 SECTION
NO SCALE

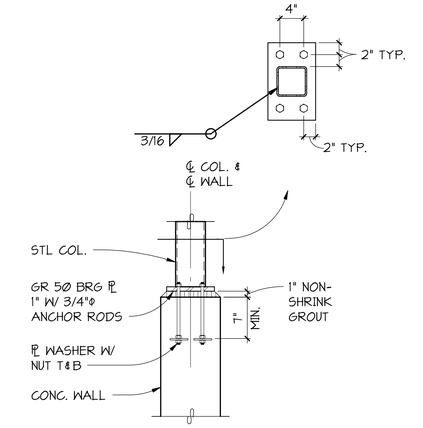

4 / S-303 SECTION
1" = 1'-0"

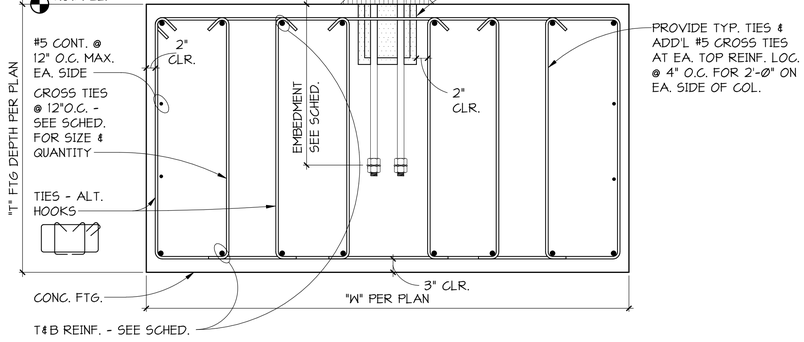

REINFORCEMENT SCHEDULE				
	TOP REINFORCEMENT	BOTTOM REINFORCEMNT	CROSS TIES	ANCHOR ROD EMBEDMENT
GB1	(8) #8	(8) #8	(4) #5	24"
GB2	(12) #8	(12) #9	(4) #5	24"

TYPICAL GRADE BEAM REINFORCING AND SCHEDULE

3 / S-303 SECTION
NO SCALE

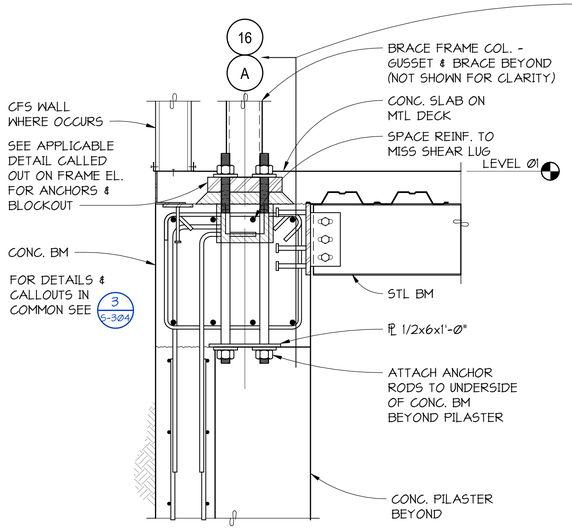

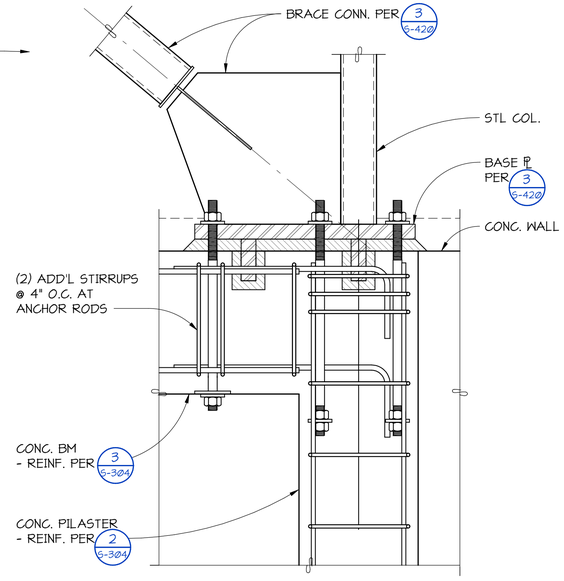

5 / S-303 SECTION
1" = 1'-0"

3427 BEACON AVE S
SEATTLE 98144
ANJALI@AGRANTDESIGN.COM
206-512-4209

anjali grant design LLC

JAMES M. LAMBERT
STATE OF WASHINGTON
33519
PROFESSIONAL ENGINEER

PCS Structural Solutions
Seattle | Tacoma | Portland
www.pcs-structural.com

3700 E MERCER WAY
BARNABIE POINT PROJECT

NO.	DATE	DESCRIPTION
	4 JUNE 2025	BUILDING PERMIT

PROJECT:

FOUNDATION DETAILS

S-303

12/15/2025 12:08:03 PM C:_Revit Models\23580 HNT Ph 13 R2024 (Central)_DanH.PCS.rvt
© ANJALI GRANT DESIGN LLC ORIGINAL SHEET SIZE: 24" X 36"

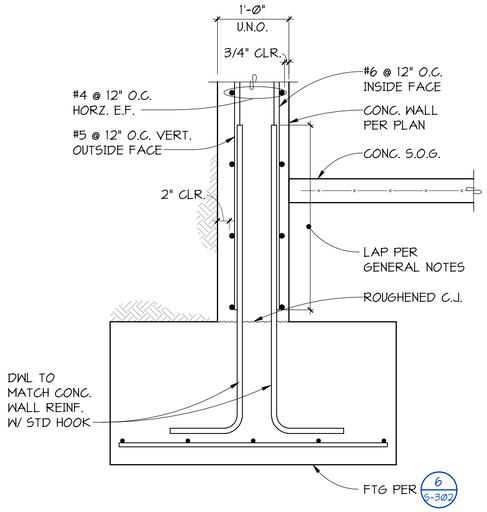

TYPICAL BASEMENT WALL CONNECTION TO FOOTING

1 S-304 **SECTION**
NO SCALE

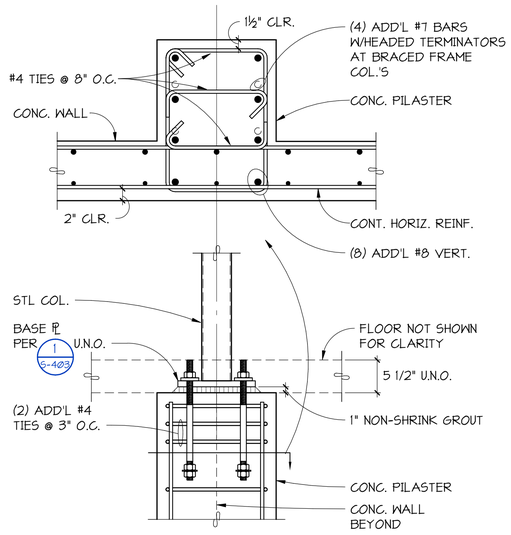

TYPICAL BASEMENT WALL PILASTER

2 S-304 **SECTION**
NO SCALE

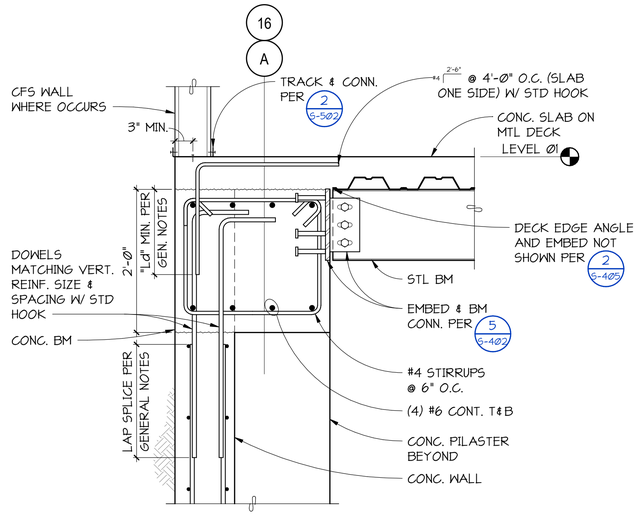

3 S-304 **SECTION**
1" = 1'-Ø"

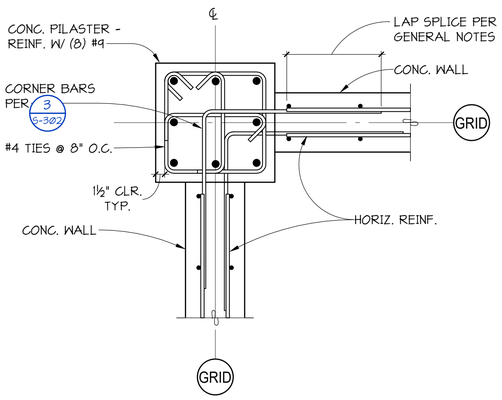

4 S-304 **PLAN DETAIL**
1" = 1'-Ø"

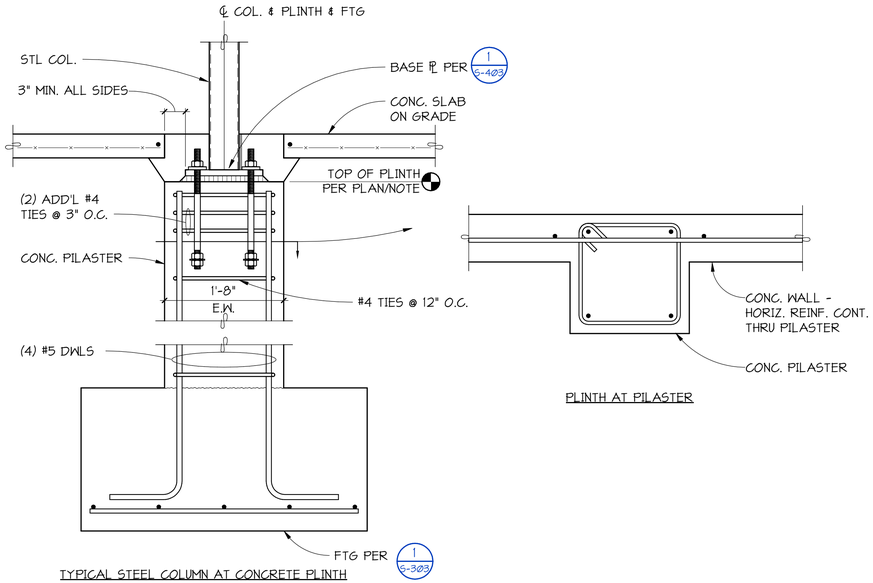

TYPICAL STEEL COLUMN AT CONCRETE PLINTH

5 S-304 **SECTION**
1" = 1'-Ø"

PLINTH AT PILASTER

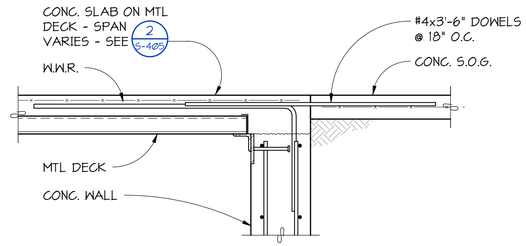

6 S-304 **SECTION**
1" = 1'-Ø"

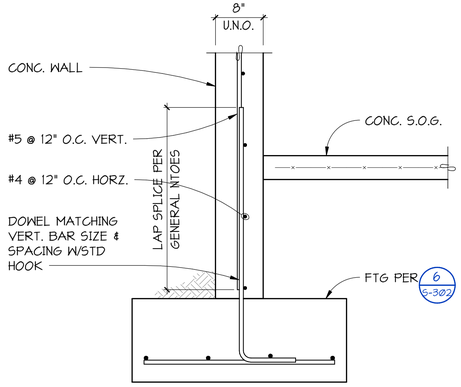

7 S-304 **SECTION**
1" = 1'-Ø"

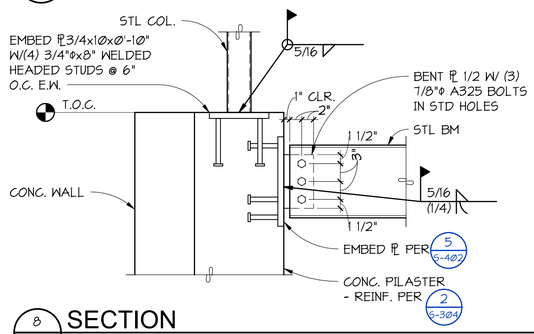

8 S-304 **SECTION**
1" = 1'-Ø"

3427 BEACON AVE S
SEATTLE 98144
ANJALI@AGRANTDESIGN.COM
206-512-4209

anjali grant design LLC

ANJALI M. GRANT
33519
REGISTERED PROFESSIONAL ENGINEER
STATE OF WASHINGTON

PCS Structural Solutions
Seattle | Tacoma | Portland
www.pcs-structural.com

3700 E MERCER WAY
BARNABIE POINT PROJECT

NO.	DATE	DESCRIPTION

4 JUNE 2025
BUILDING PERMIT

PROJECT:

FOUNDATION DETAILS

S-304

12/10/2025 12:08:06 PM C:\...\Revit Models\23580 HNT Pk-12 R2024 (Central)_DanH-PCS.rvt
© ANJALI GRANT DESIGN LLC ORIGINAL SHEET SIZE: 24" X 36"

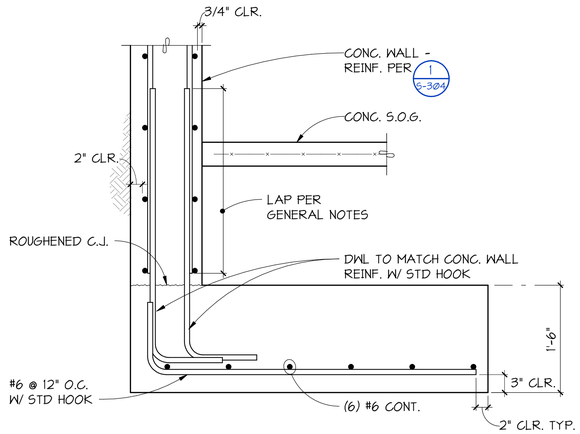

1 S-305 SECTION
NO SCALE

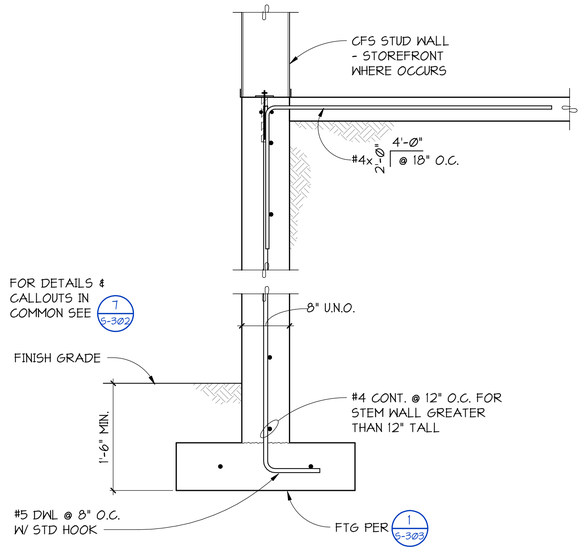

2 S-305 SECTION
1" = 1'-0"

anjali grant design LLC
3427 BEACON AVE S
SEATTLE 98144
ANJALI@AGRANTDESIGN.COM
206-512-4209



PCS Structural Solutions
Seattle | Tacoma | Portland
www.pcs-structural.com

3700 E MERCER WAY
BARNABIE POINT PROJECT

NO.	DATE	DESCRIPTION

4 JUNE 2025
BUILDING PERMIT

PROJECT:

FOUNDATION DETAILS

S-305

12/15/2025 12:08:07 PM C:_Revit Models\23580 HNT Plx-12 R2024 (Central)_Dwnt-PCS.rvt
© ANJALI GRANT DESIGN LLC ORIGINAL SHEET SIZE: 24" X 36"

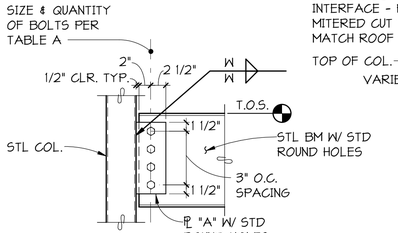

BEAM TO COLUMN

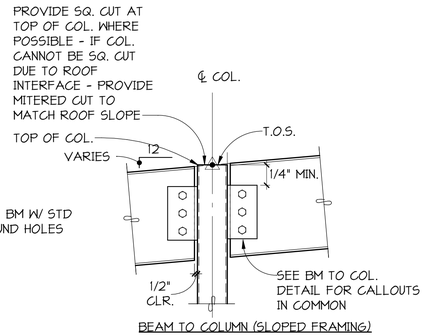

BEAM TO COLUMN (SLOPED FRAMING)

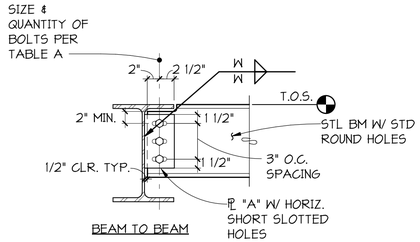

BEAM TO BEAM

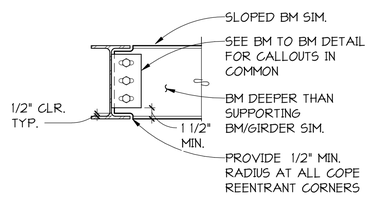

BEAM TO BEAM SAME DEPTH

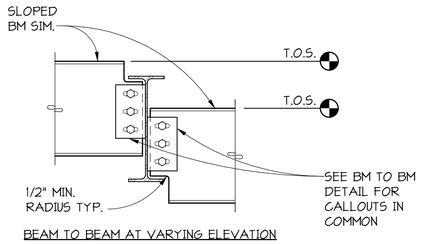

BEAM TO BEAM AT VARYING ELEVATION

TABLE A			
SUPPORTED BEAM SIZE	QUANTITY OF 7/8" DIAMETER A325N BOLTS	SHEAR PLATE THICKNESS "A"	WELD "W" NOTE 1.
W10	2	3/8"	5/16"
W12, W14	3	3/8"	5/16"
W16, W18	4	3/8"	5/16"
W21	5	3/8"	5/16"
W24	6	3/8"	5/16"
W27	7	3/8"	5/16"
W30	7	3/8"	5/16"
W33	8	3/8"	5/16"

NOTE:
1. WELD SIZE SHOWN IS FOR BEAM/GIRDERS FRAMING PERPENDICULAR INTO SUPPORTS. FOR SKEWED FRAMING CONNECTIONS - SEE TYPICAL STEEL DETAIL 2/S-401

TYPICAL STEEL DETAIL

1/S-401 DETAIL

NO SCALE

TABLE B					
"t"	SKEW ANGLE Ø	DETAIL CASE	X	W_N	W_F
3/8"	Ø ≤ 2°	CASE I	X ≤ 1/2	5/16	5/16
3/8"	2 < Ø ≤ 11°	CASE I	1/2 < X ≤ 2 5/16	3/8	5/16
3/8"	11° < Ø ≤ 25°	CASE I	2 5/16 < X ≤ 5 1/2	1/2	5/16
3/8"	25° < Ø ≤ 30°	CASE I	5 1/2 < X ≤ 7	9/16	5/16
3/8"	30° < Ø < 45°	CASE II	7 < X < 12	3/8	5/16
3/8"	Ø = 45°	CASE III	X = 12	1/4"	5/16
3/8"	Ø > 45°	CASE IV	X < 12	CP	-

NOTES:
1. THE NUT MAY BE PLACED ON THE ACUTE ANGLE SIDE OF SHEAR PLATE. WHEN THIS SITUATION OCCURS, THE BOLT ASSEMBLY MAY BE INSTALLED AS SNUG TIGHT IN LIEU OF FULLY PRETENSIONED.
2. PROVIDE A COMPLETE PENETRATION WELD OF THE SHEAR PLATE TO THE SUPPORTING MEMBER WHERE THERE IS INSUFFICIENT CLEARANCE TO PLACE FILLET WELDS ON BOTH SIDES OF THE SHEAR PLATE.
3. "W_N IS THE EFFECTIVE THROAT OF A PARTIAL PENETRATION WELD.

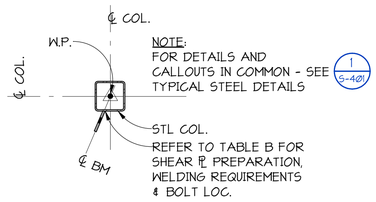

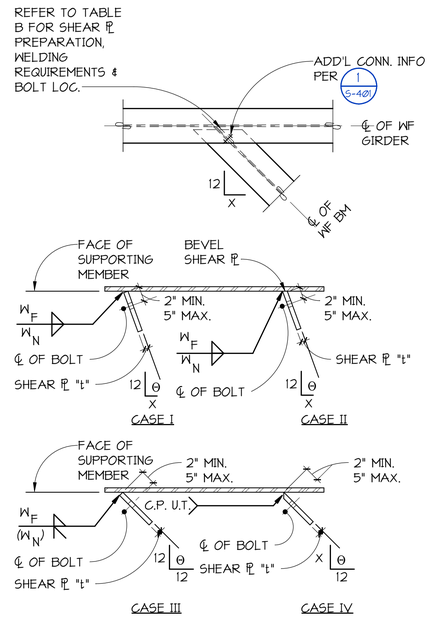

TYPICAL STEEL DETAIL AT ANGLED CONNECTIONS

2/S-401 DETAIL

NO SCALE

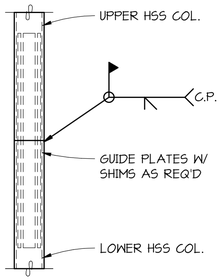

NOTE: COLUMN SPLICES SHALL BE LOCATED 4'-0" ABOVE FINISHED FLOOR ELEVATION U.N.O.

TYPICAL HSS COLUMN SPLICE

3/S-401 SECTION

1" = 1'-0"

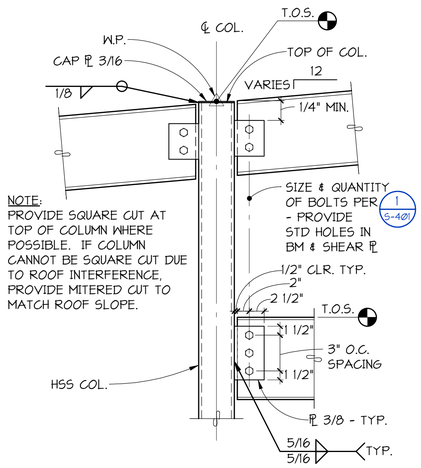

TYPICAL BEAM FRAMING INTO HOLLOW STRUCTURAL STEEL COLUMN

4/S-401 DETAIL

NO SCALE

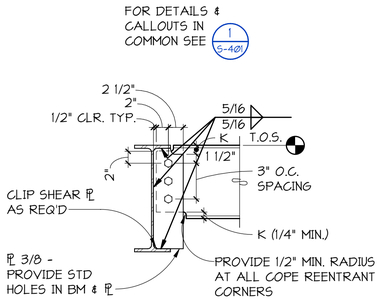

TYPICAL BEAM FRAMING AT FULL DEPTH SHEAR PLATE

5/S-401 DETAIL

NO SCALE

3427 BEACON AVE S
SEATTLE 98144
ANJALI@AGRANTDESIGN.COM
206-512-4209

anjali grant design LLC

JAMES M. LINDSAY
33519
REGISTERED PROFESSIONAL ENGINEER
STATE OF WASHINGTON

PCS Structural Solutions
Seattle | Tacoma | Portland
www.pcs-structural.com

3700 E MERCER WAY
BARNABIE POINT PROJECT

NO.	DATE	DESCRIPTION

4 JUNE 2025
BUILDING PERMIT

PROJECT:

STEEL FRAMING DETAILS

S-401

12/10/2025 12:08:09 PM C:_Revit Models\23580 HNT Pk-12 R2024 (Central)_DianH-PCS.rvt
© ANJALI GRANT DESIGN LLC ORIGINAL SHEET SIZE: 24" X 36"

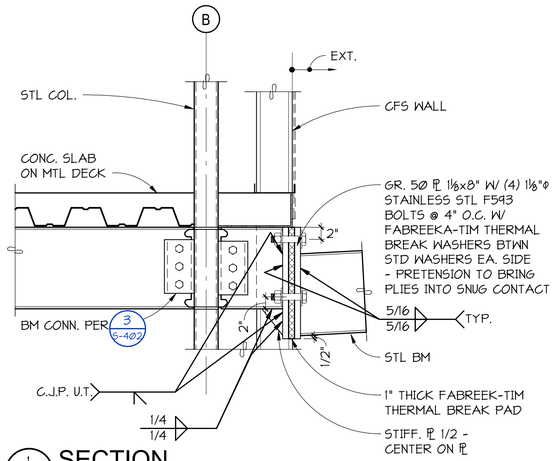

1 S-402 **SECTION**
1" = 1'-0"

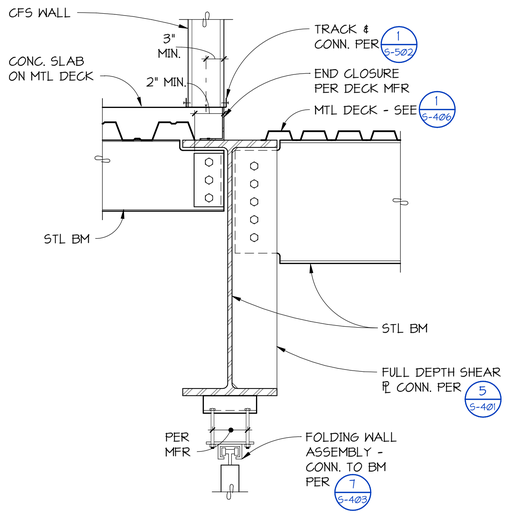

2 S-402 **SECTION**
1" = 1'-0"

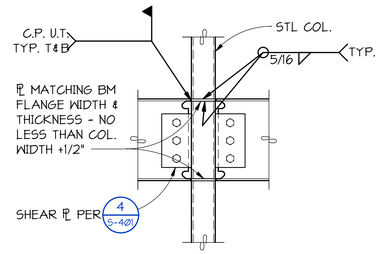

TYPICAL MOMENT CONNECTION AT HOLLOW STRUCTURAL SECTION COLUMN

3 S-402 **SECTION**
1" = 1'-0"

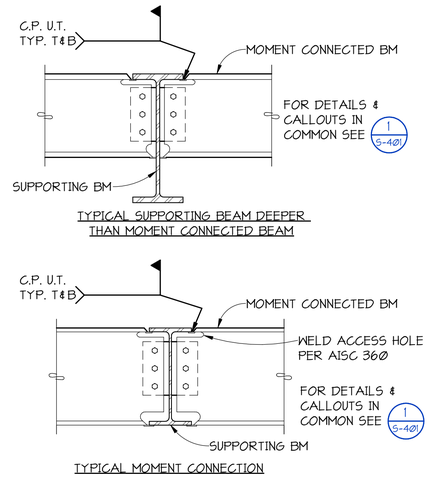

TYPICAL SUPPORTING BEAM DEEPER THAN MOMENT CONNECTED BEAM

TYPICAL MOMENT CONNECTION

4 S-402 **DETAIL**
NO SCALE

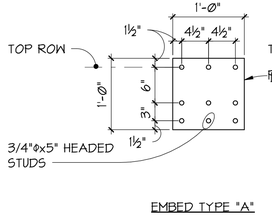

EMBED TYPE "A"

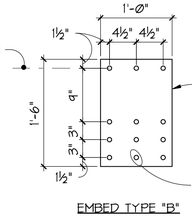

EMBED TYPE "B"

TABLE E		
BEAM SIZE	EMBED PLATE TYPE	QUANTITY OF 7/8" DIAMETER A325N BOLTS
W10	"A"	2
W12, W14, W16	"A"	3
W18, W21, W24	"B"	4
W27, W30	"B"	5

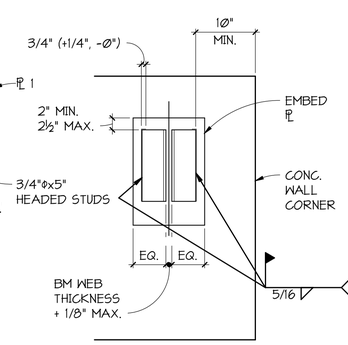

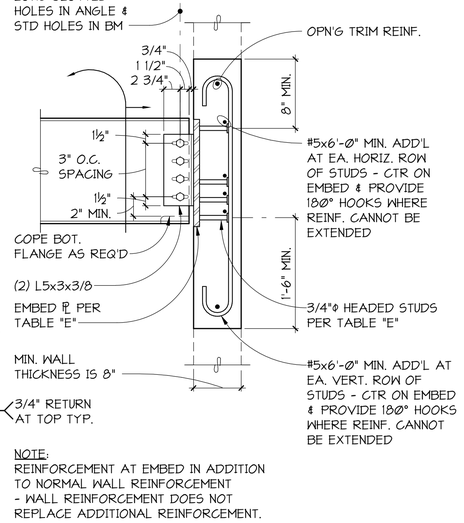

NOTE:
REINFORCEMENT AT EMBED IN ADDITION TO NORMAL WALL REINFORCEMENT - WALL REINFORCEMENT DOES NOT REPLACE ADDITIONAL REINFORCEMENT.

TYPICAL STEEL EMBED CONNECTION

5 S-402 **DETAIL**
NO SCALE

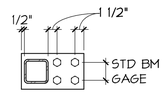

BEARING PLATE AT END OF BEAM

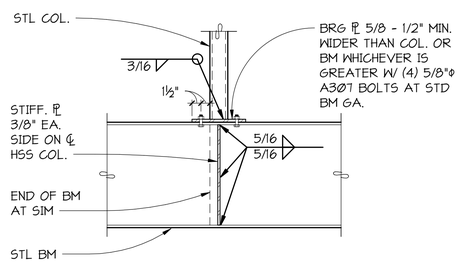

TYPICAL STEEL BEAM CONNECTION TO COLUMN ABOVE

6 S-402 **DETAIL**
NO SCALE

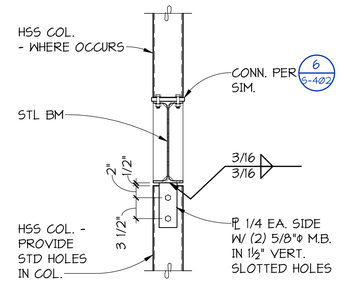

7 S-402 **SECTION**
NO SCALE

3427 BEACON AVE S
SEATTLE 98144
ANJALI@AGRANTDESIGN.COM
206-512-4209

anjali grant design LLC

JAMES M. LIMBERG
STATE OF WASHINGTON
33519
REGISTERED PROFESSIONAL ENGINEER

PCS Structural Solutions
Seattle | Tacoma | Portland
www.pcs-structural.com

3700 E MERCER WAY
BARNABIE POINT PROJECT

NO.	DATE	DESCRIPTION
		4 JUNE 2025 BUILDING PERMIT

PROJECT:

STEEL FRAMING DETAILS

S-402

12/15/2025 12:08:11 PM C:_Revit Models\23580 HNT Ph-12 R2024 (Central)_DanH.PCS.rvt
© ANJALI GRANT DESIGN LLC ORIGINAL SHEET SIZE: 24" X 36"

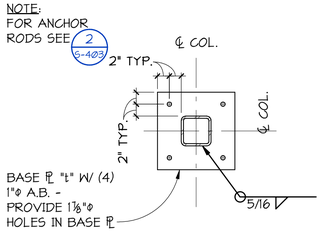

HOLLOW STRUCTURAL SECTION

COLUMN SIZE	"t" (IN.)
HSS6x6 AND SMALLER	1"

TYPICAL GRAVITY COLUMN BASE PLATE

1 S-403 DETAIL

NO SCALE

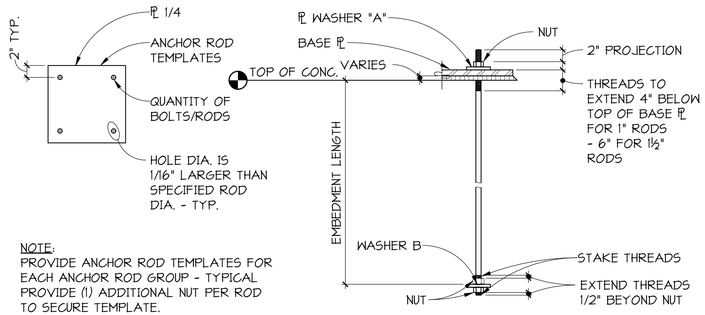

NOTE:
PROVIDE ANCHOR ROD TEMPLATES FOR EACH ANCHOR ROD GROUP - TYPICAL PROVIDE (1) ADDITIONAL NUT PER ROD TO SECURE TEMPLATE.

ANCHOR ROD		WASHER		NUT
SIZE	MATERIAL	TYPE	SIZE	
1"ø	F1554 GR. 36	A	ℙ 3/8x3x3"ø-3" W/ 1⅛"ø HOLE CTR'D	A563 GR. A HEAVY HEX
		B	ASTM F844 CARBON FLAT WASHER	

TYPICAL ANCHOR ROD/BOLT DETAIL

2 S-403 DETAIL

NO SCALE

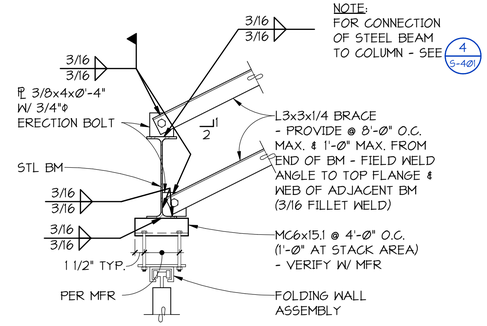

TYPICAL MOVEABLE PARTITION SUPPORT BEAM

3 S-403 SECTION

NO SCALE

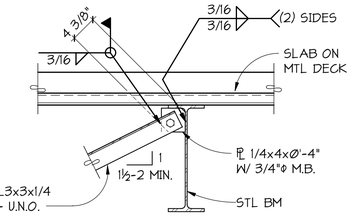

KICKER CONNECTION TO STEEL BEAM

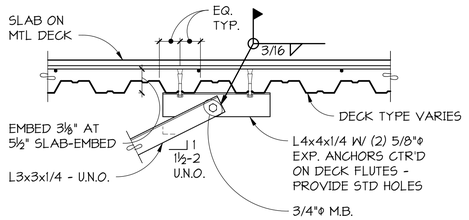

KICKER PERPENDICULAR TO DECK FLUTES - DECK WITH CONCRETE TOPPING ONLY

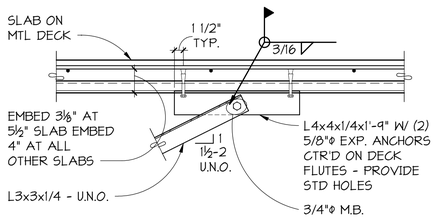

KICKER CONNECTION PARALLEL TO DECK FLUTES - DECK WITH CONCRETE TOPPING ONLY

4 S-403 SECTION

NO SCALE

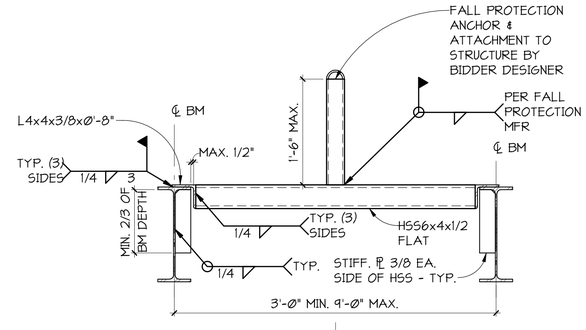

AT STEEL BEAM

TYPICAL FALL RESTRAINT ANCHOR AT STEEL BEAM

5 S-403 DETAIL

NO SCALE

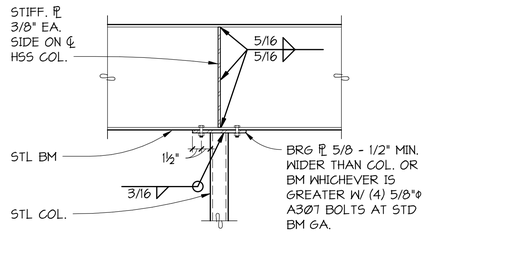

TYPICAL STEEL BEAM CONNECTION TO COLUMN BELOW

6 S-403 SECTION

1" = 1'-0"

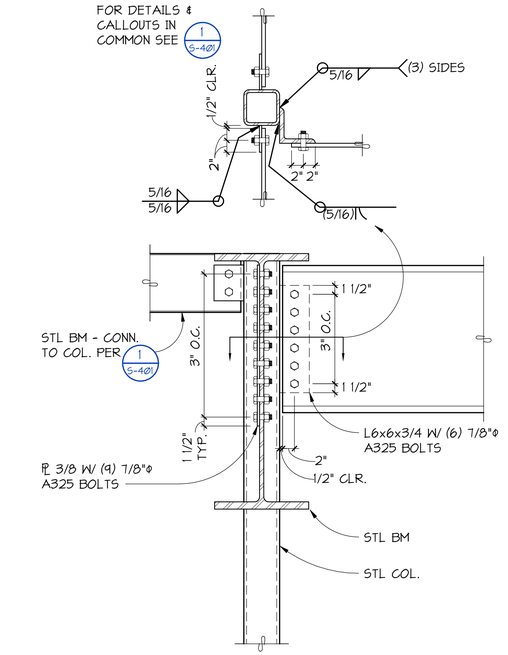

7 S-403 SECTION

1" = 1'-0"

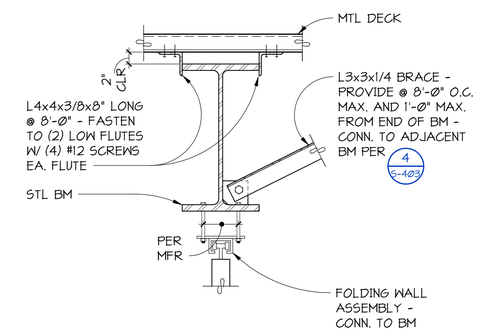

8 S-403 SECTION

1" = 1'-0"

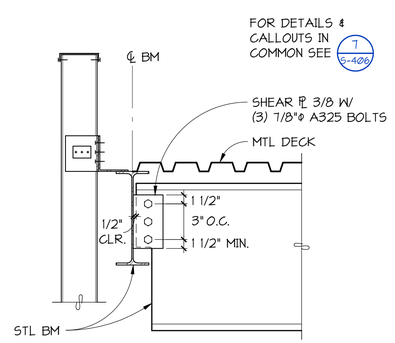

9 S-403 SECTION

1" = 1'-0"

10 S-403 SECTION

1" = 1'-0"

3427 BEACON AVE S
SEATTLE 98144
ANJALI@AGRANTDESIGN.COM
206-512-4209

anjali grant design LLC

JAMES M. LIMBERG
STATE OF WASHINGTON
33519
REGISTERED PROFESSIONAL ENGINEER

PCS Structural Solutions
Seattle | Tacoma | Portland
www.pcs-structural.com

3700 E MERCER WAY
BARNABIE POINT PROJECT

NO.	DATE	DESCRIPTION
	4 JUNE 2025	BUILDING PERMIT

PROJECT:

STEEL FRAMING DETAILS

S-403

12/15/2025 12:05:13 PM C:_Revit Models\23580 HNT Ph.12 EO2024 (Central)_Dan#1.PCS.rvt
© ANJALI GRANT DESIGN LLC ORIGINAL SHEET SIZE: 24" X 36"

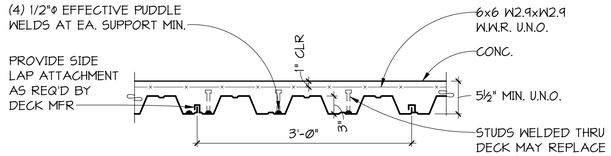

TYPE "W-3" MIN. DECK PROPERTIES		
GAGE	I = (in.⁴/ft.)	+S/-S = (in.³/ft)
20	.907	.510/.528
18	1.213	.752/.768
16	1.516	.968/.966

NOTES:
1. (2) SPAN MINIMUM, (3) SPAN PREFERRED. WHERE SIMPLE SPAN SHOWN ON DRAWINGS, GENERAL CONTRACTOR TO PROVIDE SHORING.
2. AT SUPPORTS PARALLEL TO CORRUGATIONS, PROVIDE PUDDLE WELDS @ 24" O.C. MAXIMUM.
3. CONDUIT NOT PERMITTED IN SLAB.
4. SECTION PROPERTIES ARE BASED ON Fy = 50 KSI.

TYPICAL COMPOSITE FLOOR DECK

1 S-404 DETAIL
NO SCALE

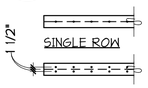

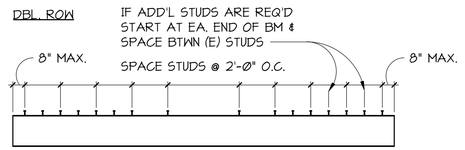

NOTES:
1. LOCATE STUDS AT CENTER OF BEAM FLANGE.
2. STUDS ARE 3/4"ø x 4½" LONG AFTER WELDING.
3. SEE FRAMING PLANS FOR NUMBER OF STUDS.
4. ALL BEAMS WITH STUDS ARE COMPOSITE STEEL BEAMS.
5. PROVIDE A DOUBLE ROW OF STUDS AT BEAMS WHERE THE REQUIRED NUMBER OF STUDS EXCEEDS THE NUMBER THAT CAN FIT IN A SINGLE ROW AT 6" ON CENTER AT DECK PARALLEL TO BEAM OR 12" ON CENTER AT DECK PERPENDICULAR TO BEAM. STUDS SHOULD BE LOCATED IN DECK FLUTES PER AISC STRONG POSITION.

TYPICAL COMPOSITE BEAM DETAIL

5 S-404 DETAIL
NO SCALE

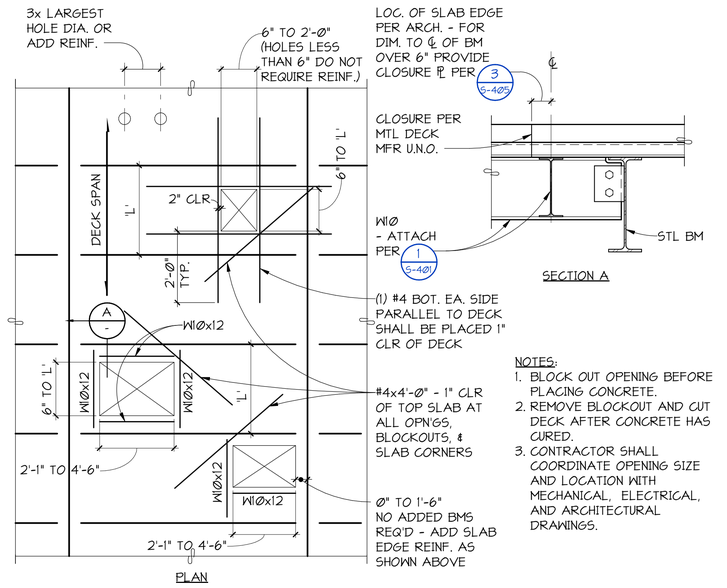

NOTES:
1. BLOCK OUT OPENING BEFORE PLACING CONCRETE.
2. REMOVE BLOCKOUT AND CUT DECK AFTER CONCRETE HAS CURED.
3. CONTRACTOR SHALL COORDINATE OPENING SIZE AND LOCATION WITH MECHANICAL, ELECTRICAL, AND ARCHITECTURAL DRAWINGS.

TYPICAL FLOOR PENETRATION REINFORCEMENT

2 S-404 DETAIL
NO SCALE

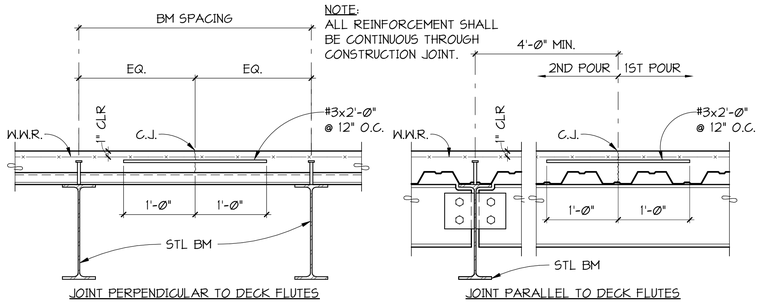

TYPICAL COMPOSITE DECK CONSTRUCTION JOINT

6 S-404 SECTION
NO SCALE

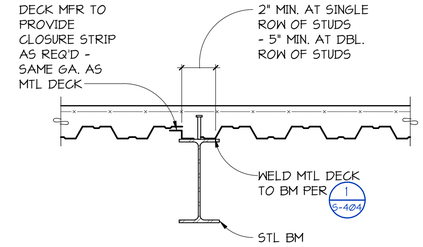

TYPICAL AT METAL DECK PARALLEL TO BEAM

3 S-404 SECTION
NO SCALE

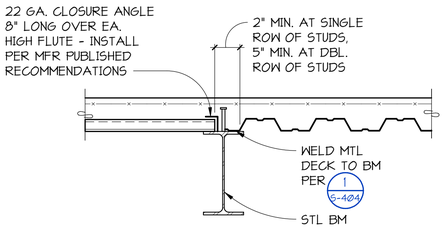

TYPICAL AT METAL DECK TRANSITION AT BEAM

4 S-404 SECTION
NO SCALE

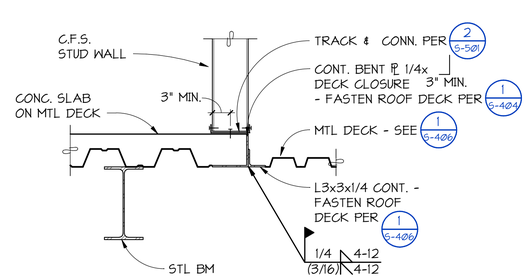

TYPICAL COMPOSITE BEAM TO CONCRETE WALL

7 S-404 SECTION
1" = 1'-0"

anjali grant design LLC
3427 BEACON AVE S
SEATTLE 98144
ANJALI@AGRANTDESIGN.COM
206-512-4209

PCS Structural Solutions
Seattle | Tacoma | Portland
www.pcs-structural.com

3700 E MERCER WAY
BARNABIE POINT PROJECT

NO.	DATE	DESCRIPTION
	4 JUNE 2025	BUILDING PERMIT

PROJECT:

STEEL FRAMING DETAILS

S-404

12/10/2025 12:08:15 PM C:\...Revit Models\25080 HNT Pk-12 R2024 (Central)_David+JPCS.rvt
© ANJALI GRANT DESIGN LLC ORIGINAL SHEET SIZE: 24" X 36"

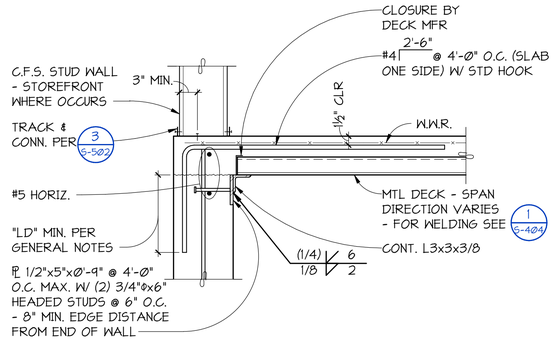

TYPICAL FLOOR METAL DECK CONNECTION AT CONCRETE WALL

2 S-405 **SECTION** NO SCALE

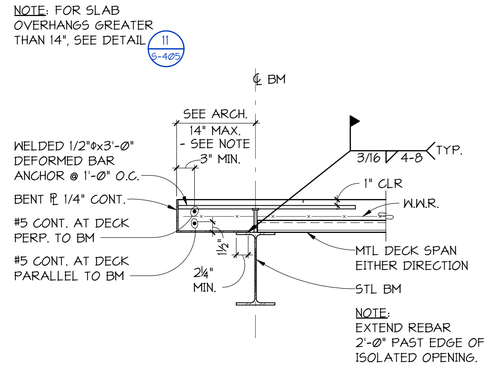

TYPICAL SLAB EDGE CONDITION - OVER 6" OVERHANG

3 S-405 **SECTION** NO SCALE

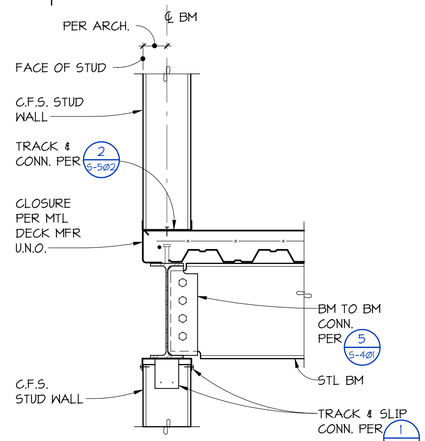

TYPICAL EXTERIOR WALL AT FLOOR EDGE GIRDER

4 S-405 **SECTION** NO SCALE

TYPICAL EXTERIOR WALL AT FLOOR EDGE BEAM

5 S-405 **SECTION** NO SCALE

TYPICAL EXTERIOR WALL AT FLOOR EDGE BEAM

6 S-405 **SECTION** NO SCALE

TYPICAL EXTERIOR WALL AT FLOOR EDGE BEAM

7 S-405 **SECTION** NO SCALE

TYPICAL BYPASS EXTERIOR WALL AT FLOOR EDGE BEAM

8 S-405 **SECTION** NO SCALE

TYPICAL BYPASS EXTERIOR WALL AT FLOOR EDGE BEAM

9 S-405 **SECTION** NO SCALE

TYPICAL SPANDREL EXTERIOR WALL AT FLOOR EDGE BEAM

10 S-405 **SECTION** NO SCALE

11 S-405 **SECTION** 1" = 1'-Ø"

12 S-405 **SECTION** 1" = 1'-Ø"

13 S-405 **SECTION** 1" = 1'-Ø"

3427 BEACON AVE S
SEATTLE 98144
ANJALI@AGRANTDESIGN.COM
206-512-4209

anjali grant design LLC

JAMES M. LIMBERG
STATE OF WASHINGTON
33519
PROFESSIONAL ENGINEER

PCS Structural Solutions
Seattle | Tacoma | Portland
www.pcs-structural.com

3700 E MERCER WAY
BARNABIE POINT PROJECT

NO.	DATE	DESCRIPTION
	4 JUNE 2025	BUILDING PERMIT

PROJECT:

STEEL FRAMING DETAILS

S-405

12/15/2023 12:08:17 PM C:_Revit Models\23500 HNT Ph-12 R2024 (Central)_David-PCS.rvt
© ANJALI GRANT DESIGN LLC ORIGINAL SHEET SIZE: 24" X 36"

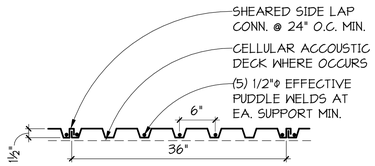

TYPE "B" DECK PROPERTIES		
GAGE	I = (in.^{4}/ft.)	+S/-S = (in.^{3}/ft)
20	.219	.230/.237
18	.302	.314/.331
16	.381	.399/.410

NOTES:
1. (2) SPAN MINIMUM, (3) PREFERRED.
2. AT SUPPORTS PARALLEL TO CORRUGATIONS, PROVIDE PUDDLE WELDS AT 24" ON CENTER MAXIMUM.
3. "SHEARED SIDE LAP" CONNECTION REFERS TO "PUNCHLOK" BY VERCO DECKING, INC. OR "DELTAGRIP" BY ASC STEEL DECK, OR PREAPPROVED EQUAL.
4. MINIMUM DECK PROPERTIES AND WELD PATTERN SHOWN. PROVIDE HEAVIER GAGE AND/OR WELD PATTERN AS REQUIRED TO DEVELOP DIAPHRAGM SHEARS.
5. SECTION PROPERTIES ARE BASED ON Fy = 50 KSI.

TYPICAL ROOF METAL DECK

1 / S-406 DETAIL
NO SCALE

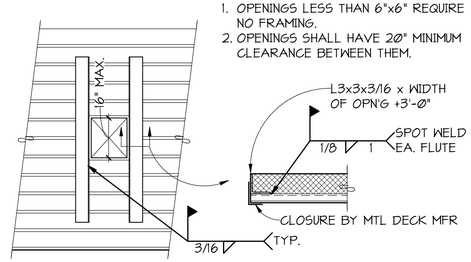

NOTES:
1. OPENINGS LESS THAN 6"x6" REQUIRE NO FRAMING.
2. OPENINGS SHALL HAVE 20" MINIMUM CLEARANCE BETWEEN THEM.

TYPICAL AT ISOLATED OPENINGS IN NON-COMPOSITE METAL DECK LESS THAN 16 INCH SQUARE

2 / S-406 DETAIL
NO SCALE

NOTE:
PROVIDE FRAMES IN ALL BAYS OVER WHICH MECHANICAL UNIT RESTS. VERIFY SIZE AND LOCATION OF UNIT WITH MECHANICAL CONTRACTOR

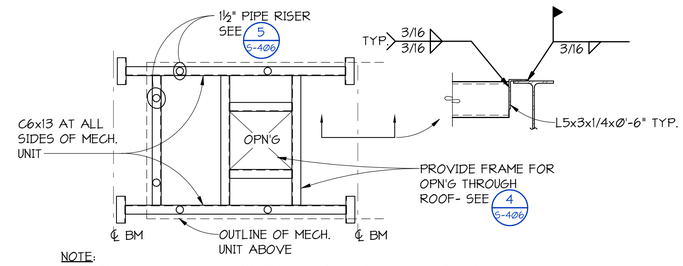

NOTE:
PROVIDE FRAMES IN ALL BAYS OVER WHICH MECHANICAL UNIT RESTS. VERIFY SIZE AND LOCATION OF UNIT WITH MECHANICAL CONTRACTOR.

TYPICAL MECHANICAL UNIT SUPPORT FRAME (MAXIMUM WEIGHT = 6000 POUNDS)

3 / S-406 DETAIL
NO SCALE

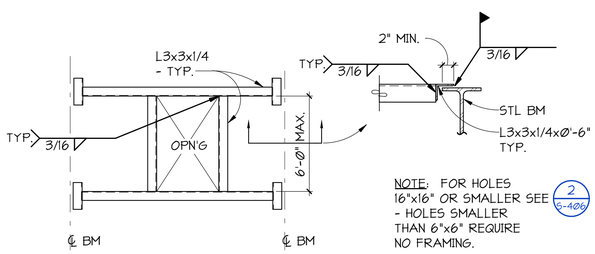

NOTE: FOR HOLES 16"x16" OR SMALLER SEE 2 / S-406 - HOLES SMALLER THAN 6"x6" REQUIRE NO FRAMING.

TYPICAL FRAMING AT OPENINGS IN METAL ROOF DECK (MAXIMUM LOAD = 600 POUNDS)

4 / S-406 DETAIL
NO SCALE

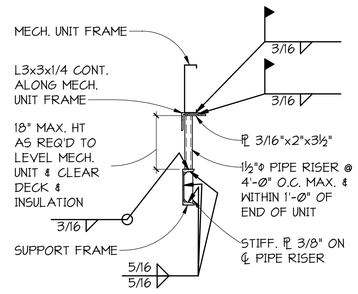

RISER SUPPORT FOR MECHANICAL UNIT FRAME

5 / S-406 DETAIL
NO SCALE

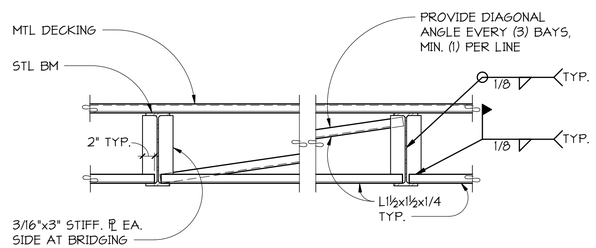

TYPICAL STEEL BEAM BRIDGING

6 / S-406 SECTION
NO SCALE

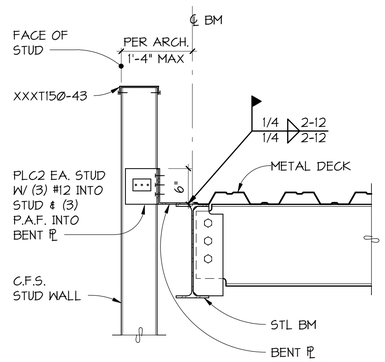

TYPICAL BYPASS EXTERIOR WALL WITH PARAPET AT ROOF EDGE GIRDER

7 / S-406 SECTION
NO SCALE

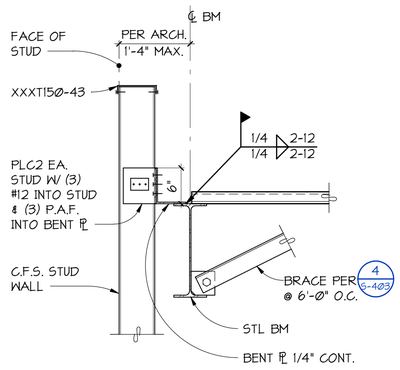

TYPICAL BYPASS EXTERIOR WALL WITH PARAPET AT ROOF EDGE BEAM

8 / S-406 SECTION
NO SCALE

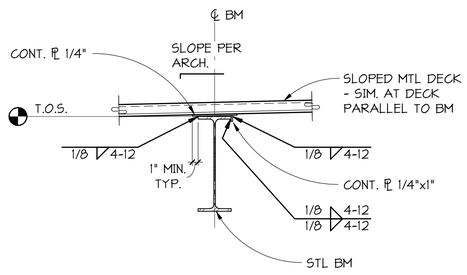

TYPICAL SLOPED DECK SUPPORT AT STEEL BEAM

9 / S-406 SECTION
1" = 1'-0"

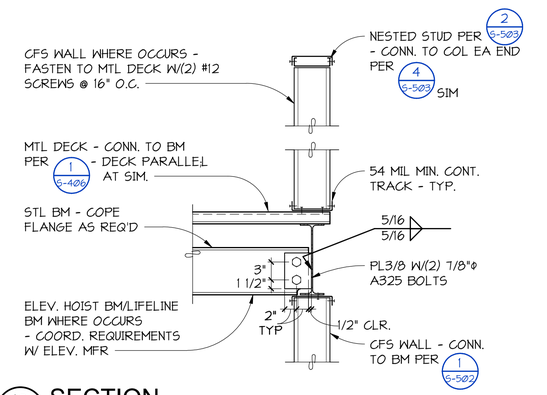

10 / S-406 SECTION
1" = 1'-0"

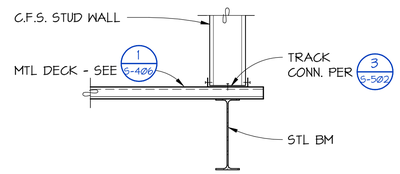

11 / S-406 SECTION
1" = 1'-0"

3427 BEACON AVE S
SEATTLE 98144
ANJALI@AGRANTDESIGN.COM
206-512-4209

anjali grant design LLC

JAMES M. LAMBERT
STATE OF WASHINGTON
33519
REGISTERED STRUCTURAL ENGINEER
PROFESSIONAL ENGINEER

PCS Structural Solutions
Seattle | Tacoma | Portland
www.pcs-structural.com

3700 E MERCER WAY
BARNABIE POINT PROJECT

NO.	DATE	DESCRIPTION

4 JUNE 2025
BUILDING PERMIT

PROJECT:

STEEL FRAMING DETAILS

S-406

12/10/2025 12:08:20 PM C:_Revit Models\25060 HNT Phs 2 R2024 (Central)_DianH-PCS.rvt
ORIGINAL SHEET SIZE: 24" X 36"
© ANJALI GRANT DESIGN LLC

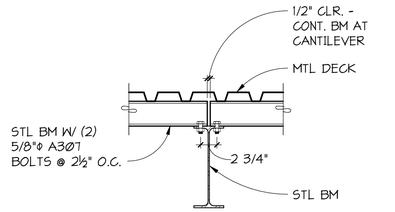

NOTE:
ALL STEEL EXPOSED TO WEATHER SHALL BE HOT DIPPED GALVANIZED.

1 S-407 SECTION
1" = 1'-0"

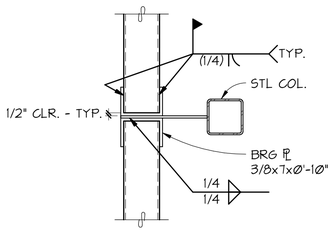

SECTION A-A

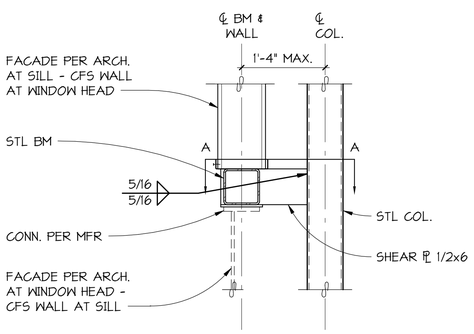

3 S-407 SECTION
1" = 1'-0"

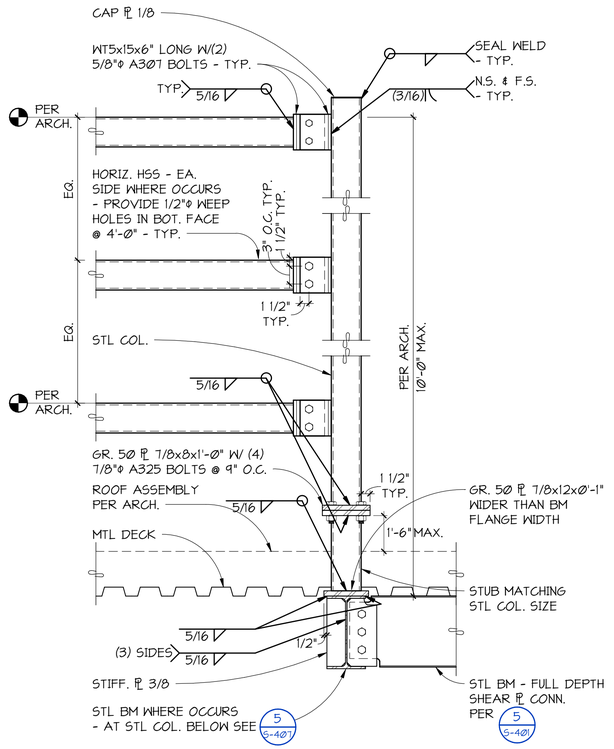

NOTE:
ALL STEEL EXPOSED TO WEATHER SHALL BE HOT DIPPED GALVANIZED.

4 S-407 SECTION
1" = 1'-0"

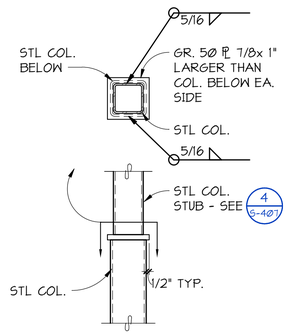

5 S-407 SECTION
1" = 1'-0"

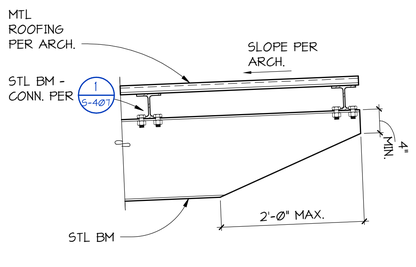

2 S-407 SECTION
1" = 1'-0"

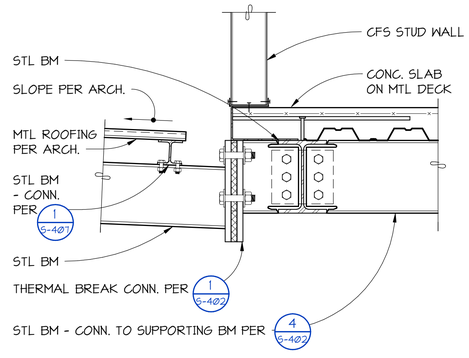

6 S-407 SECTION
1" = 1'-0"

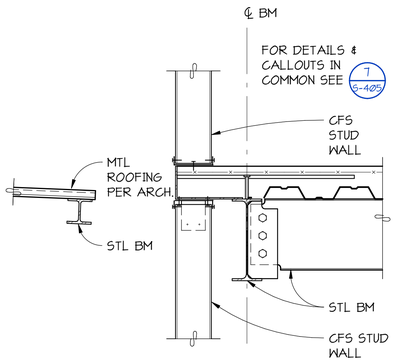

7 S-407 SECTION
1" = 1'-0"

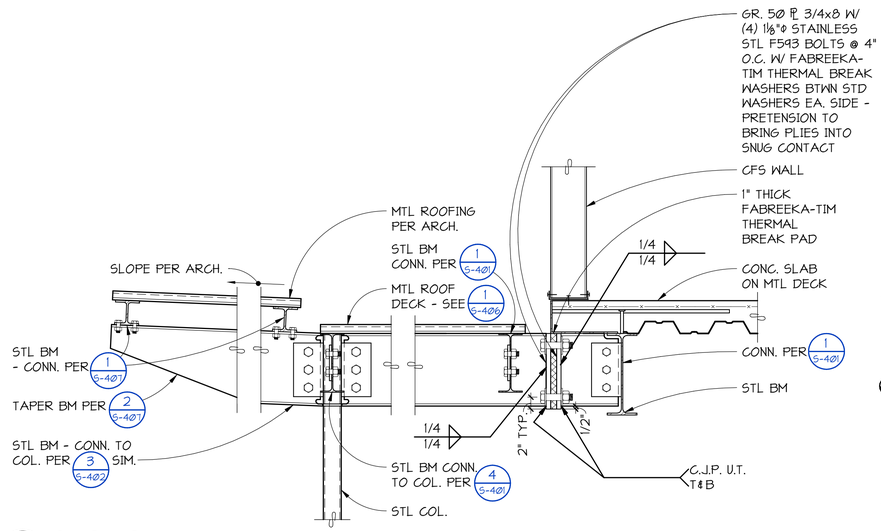

8 S-407 SECTION
1" = 1'-0"

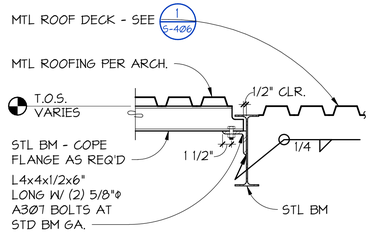

9 S-407 SECTION
1" = 1'-0"

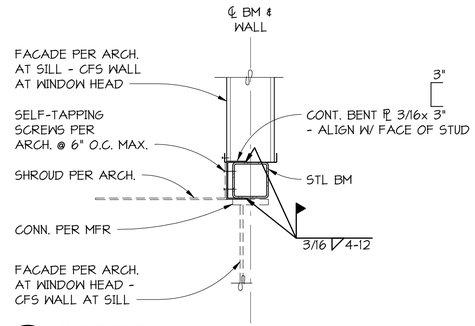

10 S-407 SECTION
1" = 1'-0"

anjali grant design LLC
3427 BEACON AVE S
SEATTLE 98144
ANJALI@AGRANTDESIGN.COM
206-512-4209

JAMES M. LINDSAY
33519
REGISTERED PROFESSIONAL ENGINEER
STATE OF WASHINGTON

PCS Structural Solutions
Seattle | Tacoma | Portland
www.pcs-structural.com

3700 E MERCER WAY
BARNABIE POINT PROJECT

NO.	DATE	DESCRIPTION
		4 JUNE 2025 BUILDING PERMIT

PROJECT:

STEEL FRAMING DETAILS

S-407

12/15/2025 12:05:22 PM C:_Revit Models\23580 HNT Ph 1\2024 (Central)_Dan#1.PCS.rvt
© ANJALI GRANT DESIGN LLC ORIGINAL SHEET SIZE: 24" X 36"

NOTE: GALVANIZE ALL STEEL EXPOSED TO WEATHER PER THE GENERAL NOTES.

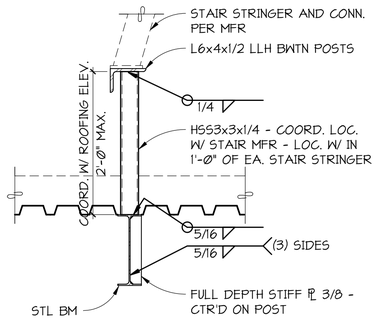

TYPICAL ROOF LADDER SUPPORT POST

1 / S-408 SECTION

1" = 1'-0"

3427 BEACON AVE S
SEATTLE 98144
ANJALI@AGRANTDESIGN.COM
206-512-4209

anjali grant design LLC

PCS Structural Solutions
Seattle | Tacoma | Portland
www.pcs-structural.com

3700 E MERCER WAY
BARNABIE POINT PROJECT

NO.	DATE	DESCRIPTION

4 JUNE 2025
BUILDING PERMIT

PROJECT:

STEEL FRAMING DETAILS

S-408

12/15/2025 12:08:24 PM C:_Revit Models\23580 HNT Plx-12 R2024 (Central)_Dan4-PCS.rvt
© ANJALI GRANT DESIGN LLC ORIGINAL SHEET SIZE: 24" X 36"

BUCKLING RESTRAINED BRACE AND GUSSET CONNECTION SCHEDULE										
BRACED FRAME	BRACE TYPE	GUSSET PLATE THICKNESS (in.)	BRACE/GUSSET WELD		BEAM WELD		COLUMN WELD		CHEVRON WELD	
			"Dwg"	"Lwg"	Wb1	Lwb1(in.)	Wc1[5]	Lwc1(in.)	Wb2	Lwb2(in.)
BF-1	BRB-1	5/8"	1/4	8	3/8	14	1/4	13	-	-
	BRB-2	3/4"	1/4	8	1/2	15	3/8	13	-	-
	BRB-3	3/4"	5/16	8	7/16	16	5/16	13	-	-
BF-2	BRB-4	5/8"	1/4	8	5/16	20	1/4	14	-	-
	BRB-5	5/8"	1/4	8	5/16	14	1/4	13	-	-
	BRB-6	3/4"	1/4	10	7/16	15	5/16	14	-	-
	BRB-7	3/4"	1/4	11	7/16	21	1/4	23	-	-
BF-3	BRB-8	5/8"	1/4	8	1/4	23	1/4	11	-	-
	BRB-9	3/4"	1/4	10	5/16	22	1/4	12	-	-
	BRB-10	7/8"	3/8	11	7/16	25	3/8	13	-	-
BF-4	BRB-11	5/8"	1/4	9	3/8	19	1/4	12	-	-
	BRB-12	7/8"	5/16	10	9/16	18	5/16	13	-	-
	BRB-13	7/8"	5/16	10	7/16	18	5/16	13	-	-
	BRB-14	7/8"	3/8	9	9/16	23	5/16	21	-	-
BF-5	BRB-15	3/4"	1/4	10	1/2	18	5/16	14	-	-
	BRB-16	3/4"	5/16	10	1/2	18	5/16	13	-	-
	BRB-17	7/8"	5/16	10	1/2	23	5/16	23	-	-
BF-6	BRB-18	5/8"	1/4	8	5/16	17	1/4	12	-	-
	BRB-19	3/4"	1/4	10	7/16	16	1/4	13	-	-
BF-7	BRB-20	3/4"	1/4	11	5/16	18	1/4	13	1/4	16
BF-8	BRB-21	3/4"	1/4	12	1/2	21	1/4	15	-	-
	BRB-22	1¼"	3/8	14	9/16	21	3/8	40	-	-
BF-9	BRB-23	3/4"	1/4	11	7/16	22	1/4	14	-	-
	BRB-24	3/4"	1/4	10	7/16	12	1/4	22	-	-

BUCKLING RESTRAINED BRACE SCHEDULE NOTES

1. SEE SHEET S-201 FOR BUCKLING RESTRAINED BRACE FRAME CALLOUTS.
2. WORK THIS SCHEDULE WITH DETAILS ON SHEETS S-420, S-421, AND S-422.
3. ALL GUSSET PLATES SHALL BE A572 GRADE 50.
4. COORDINATE ALL DIMENSIONS WITH BUCKLING RESTRAINED BRACE MANUFACTURER PRIOR TO FABRICATION.
5. WELD SIZE INDICATED IS MINIMUM ASSUMING NO GAP BETWEEN GUSSET EDGE AND COLUMN. IF, AT FIT UP, THE GAP IS GREATER THAN 1/16", THE LEG OF THE FILLET WELD SHALL BE INCREASED BY THE AMOUNT OF THE ROOT OPENING UP TO 3/16" MAXIMUM GAP.
6. FINAL DESIGN OF BUCKLING RESTARINED BRACES, GUSSET, AND CONNECTION WELDS ARE PER THE BUCKLING RESTRAINED BRACE MANUFACTURER.

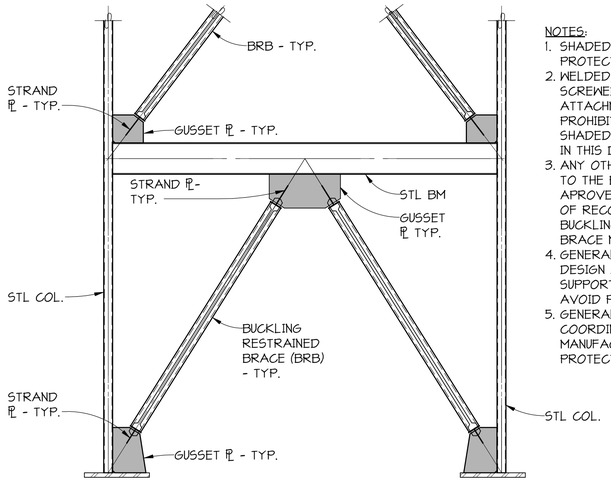

BUCKLING RESTRAINED BRACE PROTECTED ZONE

NOTES:

1. SHADED REGIONS INDICATE PROTECTED ZONES.
2. WELDED, BOLTED, SCREWED, OR SHOT IN ATTACHMENTS ARE PROHIBITED WITHIN THE SHADED REGION DEFINED IN THIS DETAIL.
3. ANY OTHER CONNECTIONS TO THE BRACE ARE TO BE APROVED BY THE ENGINEER OF RECORD AND THE BUCKLING RESTRAINED BRACE MANUFACTURER.
4. GENERAL CONTRACTOR TO DESIGN AND PROVIDE SUPPORTS AS REQUIRED TO AVOID PROTECTED ZONES.
5. GENERAL CONTRACTOR COORDINATE WITH BRB MANUFACTURER TO VERIFY PROTECTED ZONE AREA.

1 S-420 SCHEDULE
NO SCALE

2 S-420 DETAIL
NO SCALE

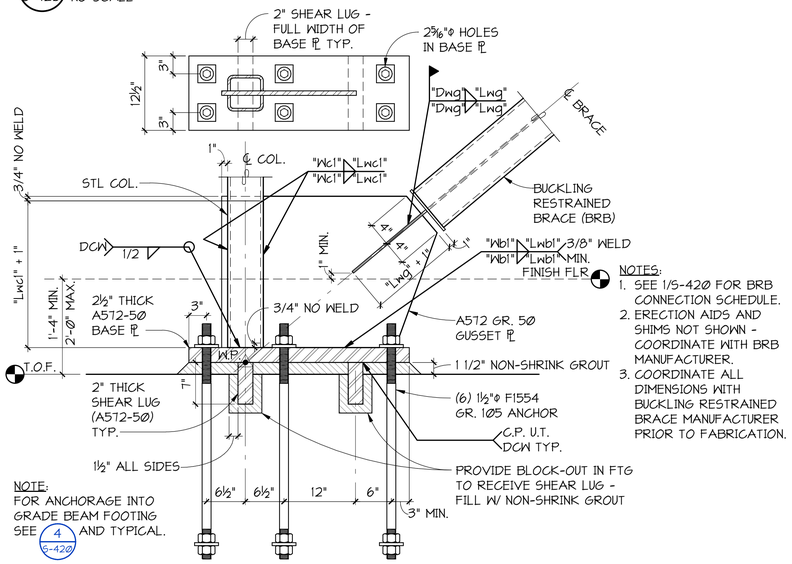

NOTES:

1. SEE 1/S-420 FOR BRB CONNECTION SCHEDULE.
2. ERECTION AIDS AND SHIMS NOT SHOWN - COORDINATE WITH BRB MANUFACTURER.
3. COORDINATE ALL DIMENSIONS WITH BUCKLING RESTRAINED BRACE MANUFACTURER PRIOR TO FABRICATION.

NOTE:
FOR ANCHORAGE INTO GRADE BEAM FOOTING SEE 4/S-420 AND TYPICAL.

TYPICAL BUCKLING RESTRAINED BRACE FOUNDATION CONNECTION

3 S-420 DETAIL
NO SCALE

NOTE:
PROVIDE ANCHOR ROD TEMPLATES FOR EACH ANCHOR ROD GROUP TYPICAL. PROVIDE (1) ADDITIONAL NUT PER ROD TO SECURE TEMPLATE.

ANCHOR ROD		WASHER		NUT
SIZE	MATERIAL	TYPE	SIZE	
1½"ø	F1554 GR. 105	A	PL 5/8x3½x0'-3½" W/ 1⅜"ø HOLE CTR'D	A563 GR. DH HEAVY HEX
		B	ASTM F844 CARBON FLAT WASHER	

TYPICAL ANCHOR ROD/BOLT AT BUCKLING RESTRAINED BRACED FRAMES

4 S-420 DETAIL
NO SCALE

NOTE:
FILLET WELD SIZE tnc IS EQUAL TO THE STEEL COLUMN WALL THICKNESS AT THE JOINT.

TYPICAL COLUMN SPLICE AT BRACED FRAMES

5 S-420 DETAIL
NO SCALE

NOTES:

1. SEE 1/S-420 FOR BUCKLING RESTRAINED BRACE CONNECTION SCHEDULE.
2. ERECTION AIDS AND SHIMS NOT SHOWN - COORDINATE WITH BUCKLING RESTRAINED BRACE MANUFACTURER.
3. COORDINATE ALL DIMENSIONS WITH BUCKLING RESTRAINED BRACE MANUFACTURER PRIOR TO FABRICATION.

TYPICAL BUCKLING RESTRAINED BRACE CHEVRON CONNECTION

6 S-420 SECTION
NO SCALE

NOTE:
ANY OTHER CONNECTIONS TO THE BRACE ARE TO BE APPROVED BY THE ENGINEER OF RECORD.

7 S-420 SECTION
NO SCALE

3427 BEACON AVE S
SEATTLE 98144
ANJALI@AGRANTDESIGN.COM
206-512-4209
anjali grant design LLC

PCS Structural Solutions
Seattle | Tacoma | Portland
www.pcs-structural.com

3700 E MERCER WAY
BARNABIE POINT PROJECT

NO.	DATE	DESCRIPTION
01	10/22/2025	BLDG PERMIT CORRECTIONS

4 JUNE 2025
BUILDING PERMIT

PROJECT:

STEEL FRAMING DETAILS

S-420

12/15/2025 12:08:26 PM C:_Revit Models\25300 HNT Ph-12 R2024 (Central)_Dwell-PCS.rvt
© ANJALI GRANT DESIGN LLC ORIGINAL SHEET SIZE: 24" X 36"

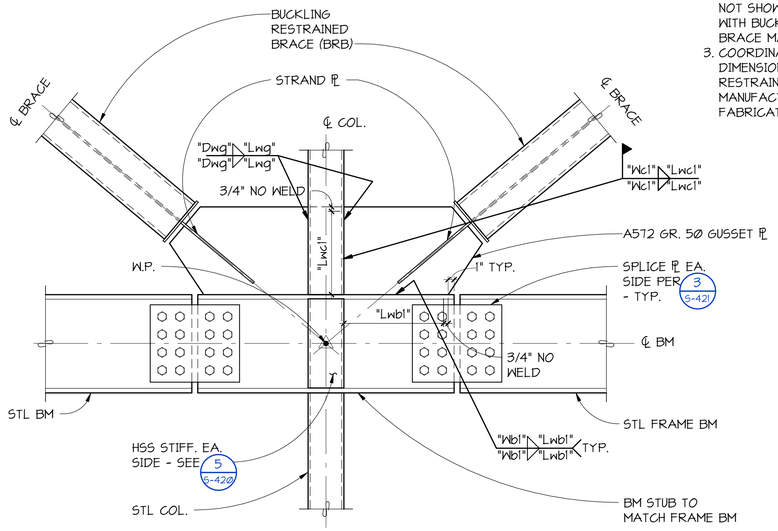

BEAM ON BOTH SIDES OF COLUMN

NOTES:
1. SEE 1/S-420 FOR BUCKLING RESTRAINED BRACE CONNECTION SCHEDULE.
2. ERECTION AIDS AND SHIMS NOT SHOWN - COORDINATE WITH BUCKLING RESTRAINED BRACE MANUFACTURER.
3. COORDINATE ALL DIMENSIONS WITH BUCKLING RESTRAINED BRACE MANUFACTURER PRIOR TO FABRICATION.

1 S-421 **SECTION**
NO SCALE

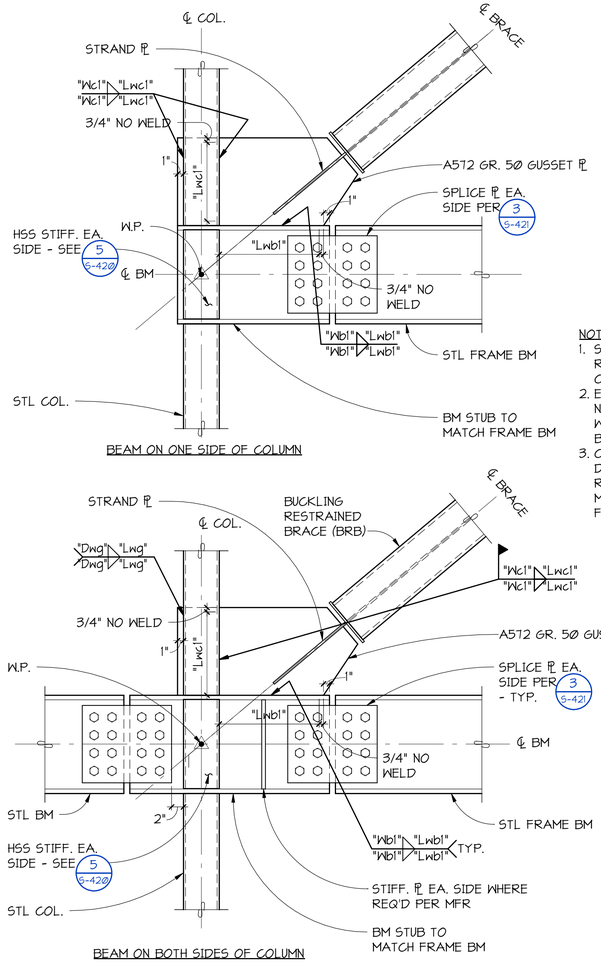

BEAM ON ONE SIDE OF COLUMN

NOTES:
1. SEE 1/S-420 FOR BUCKLING RESTRAINED BRACE CONNECTION SCHEDULE.
2. ERECTION AIDS AND SHIMS NOT SHOWN - COORDINATE WITH BUCKLING RESTRAINED BRACE MANUFACTURER.
3. COORDINATE ALL DIMENSIONS WITH BUCKLING RESTRAINED BRACE MANUFACTURER PRIOR TO FABRICATION.

BEAM ON BOTH SIDES OF COLUMN

TYPICAL BUCKLING RESTRAINED BRACE BEAM-COLUMN-BRACE CONNECTION

2 S-421 **SECTION**
NO SCALE

NOTE:
ALL FAYING SURFACES SHALL BE CLASS A

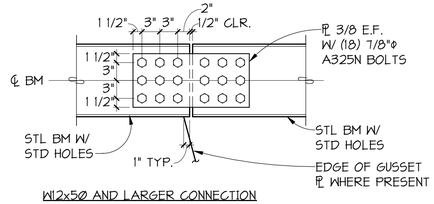

W12x50 AND LARGER CONNECTION

NOTE:
ALL FAYING SURFACES SHALL BE CLASS A

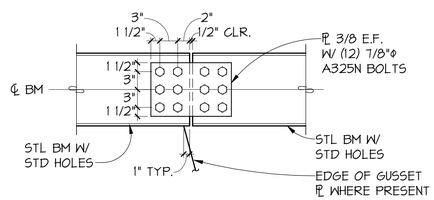

W12x45 AND SMALLER CONNECTION

3 S-421 **SECTION**
NO SCALE

NOTES:
1. ALL FAYING SURFACES SHALL BE CLASS A.
2. ALL BOLT HOLES SHALL BE STANDARD SIZE.
3. ATTACH PERPENDICULAR STEEL BEAM PER 1 S-401 UNLESS NOTED OTHERWISE ON PLAN.

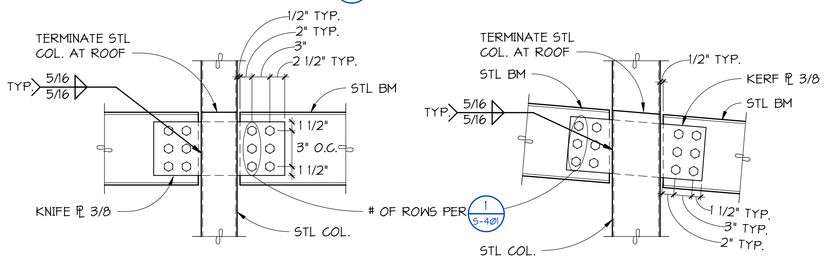

CONNECTION AT SLOPED BEAMS

4 S-421 **SECTION**
NO SCALE

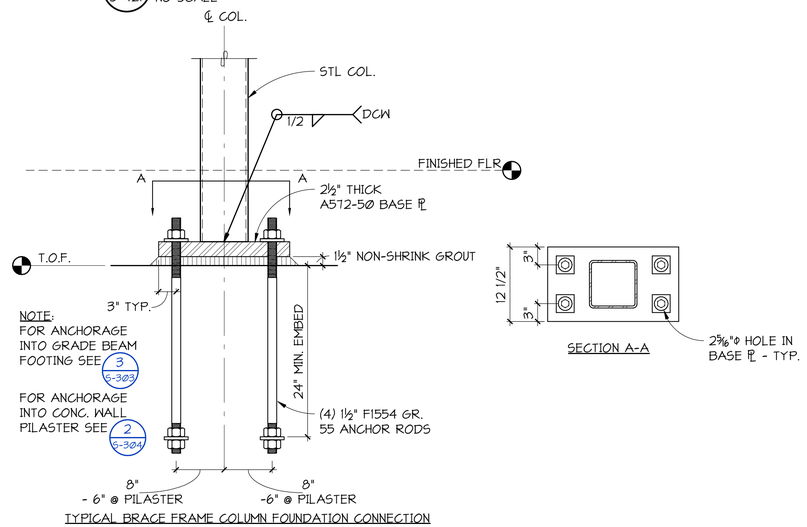

SECTION A-A

TYPICAL BRACE FRAME COLUMN FOUNDATION CONNECTION

5 S-421 **SECTION**
1" = 1'-0"

3427 BEACON AVE S
SEATTLE 98144
ANJALI@AGRANTDESIGN.COM
206-512-4209

anjali grant design LLC

33519 REGISTERED PROFESSIONAL ENGINEER STATE OF WASHINGTON ANJALI M. GRANT

PCS Structural Solutions
Seattle | Tacoma | Portland
www.pcs-structural.com

3700 E MERCER WAY
BARNABIE POINT PROJECT

NO.	DATE	DESCRIPTION
01	10/22/2025	BLDG PERMIT CORRECTIONS

4 JUNE 2025
BUILDING PERMIT

PROJECT:

STEEL FRAMING DETAILS

S-421

12/11/2025 12:09:29 PM C:_Revit Models\23080 INIT Ph-12 R2024 (Central)_Dwg4-PCS.rvt
ORIGINAL SHEET SIZE: 24" X 36"
© ANJALI GRANT DESIGN LLC

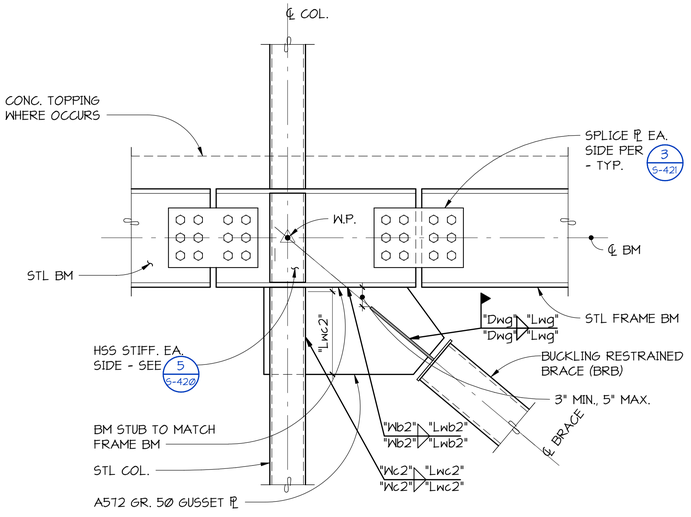

BEAM ON BOTH SIDES OF COLUMN

1 S-422 **SECTION**
1" = 1'-0"

NOTES:
1. SEE 1/S-420 FOR BUCKLING RESTRAINED BRACE CONNECTION SCHEDULE.
2. ERECTION AIDS AND SHIMS NOT SHOWN - COORDINATE WITH BUCKLING RESTRAINED BRACE MANUFACTURER.
3. COORDINATE ALL DIMENSIONS WITH BUCKLING RESTRAINED BRACE MANUFACTURER PRIOR TO FABRICATION.

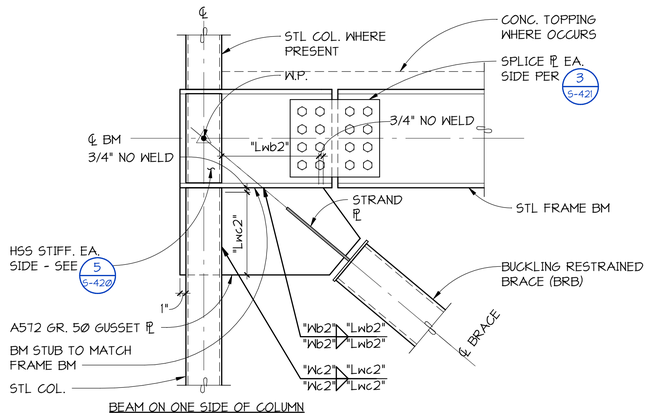

BEAM ON ONE SIDE OF COLUMN

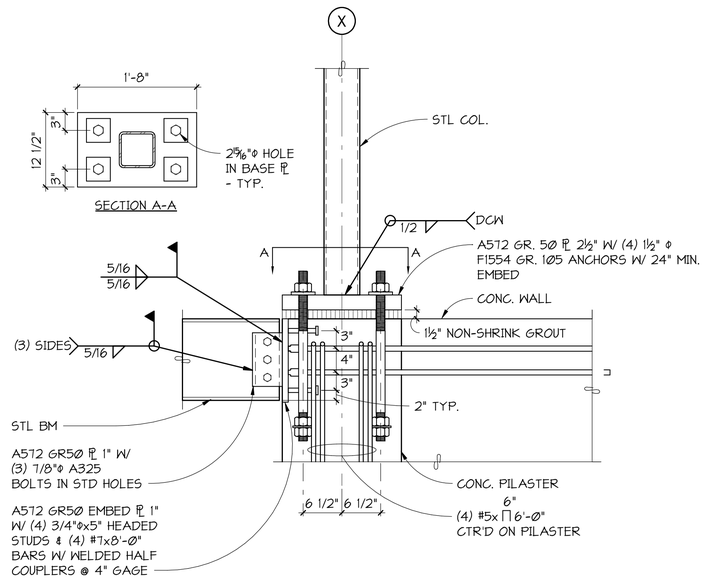

2 S-422 **SECTION**
1" = 1'-Ø"

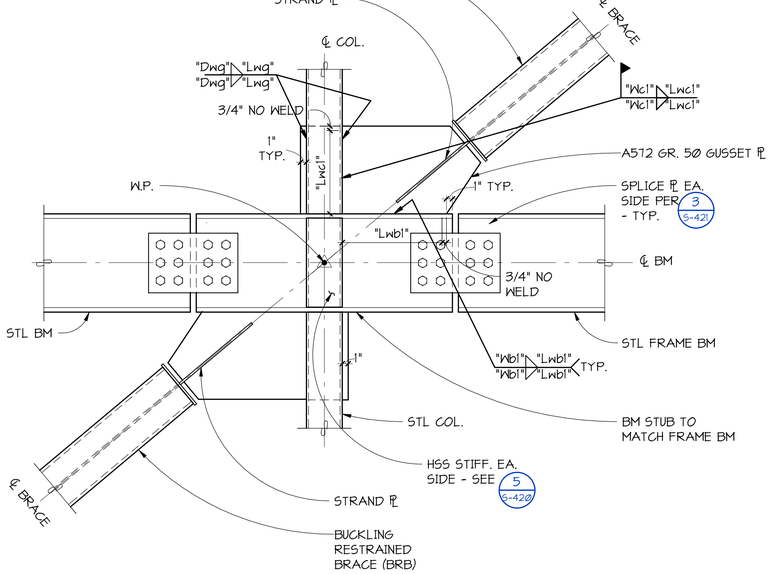

3 S-422 **SECTION**
1" = 1'-Ø"

NOTES:
1. SEE 1/S-420 FOR BRB CONNECTION SCHEDULE.
2. ERECTION AIDS AND SHIMS NOT SHOWN - COORDINATE WITH BRB MANUFACTURER.
3. COORDINATE ALL DIMENSIONS WITH BUCKLING RESTRAINED BRACE MANUFACTURER PRIOR TO FABRICATION.

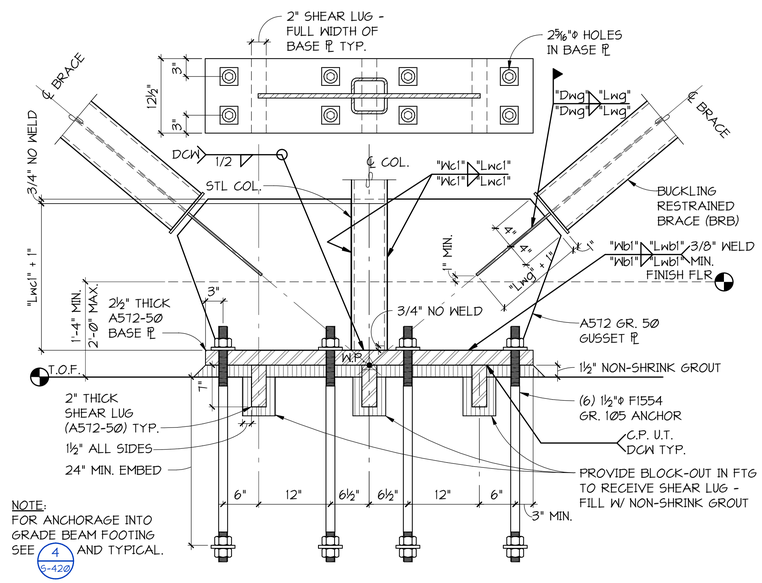

4 S-422 **SECTION**
1" = 1'-Ø"

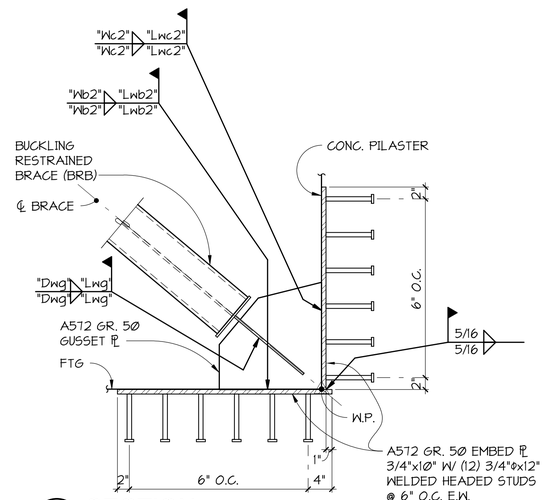

5 S-422 **SECTION**
1" = 1'-Ø"

3427 BEACON AVE S
SEATTLE 98144
ANJALI@AGRANTDESIGN.COM
206-512-4209
anjali grant design LLC

PCS Structural Solutions
Seattle | Tacoma | Portland
www.pcs-structural.com

3700 E MERCER WAY
BARNABIE POINT PROJECT

NO.	DATE	DESCRIPTION
01	10/22/2025	BLDG PERMIT CORRECTIONS

4 JUNE 2025
BUILDING PERMIT

PROJECT:

STEEL FRAMING DETAILS

S-422

12/15/2025 12:08:31 PM C:_Revit Models\23580 HNT Ph-12 R2024 (Central)_DanH.RCS.rvt
© ANJALI GRANT DESIGN LLC ORIGINAL SHEET SIZE 24" X 36"

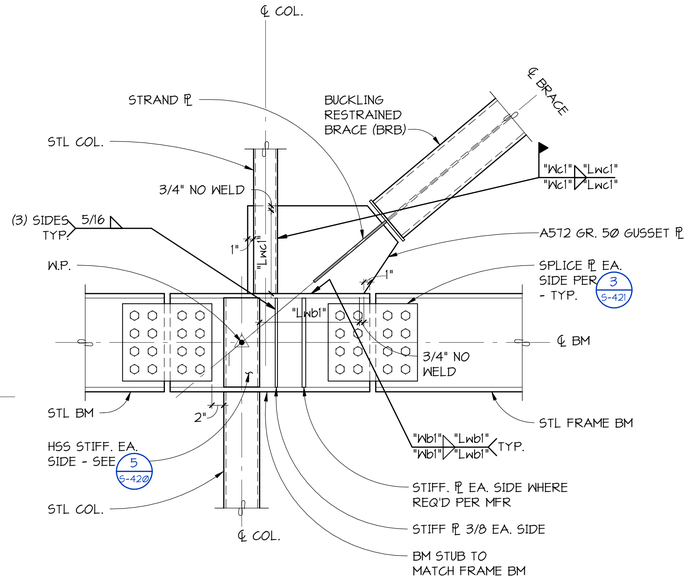

1 S-423 SECTION
1" = 1'-0"

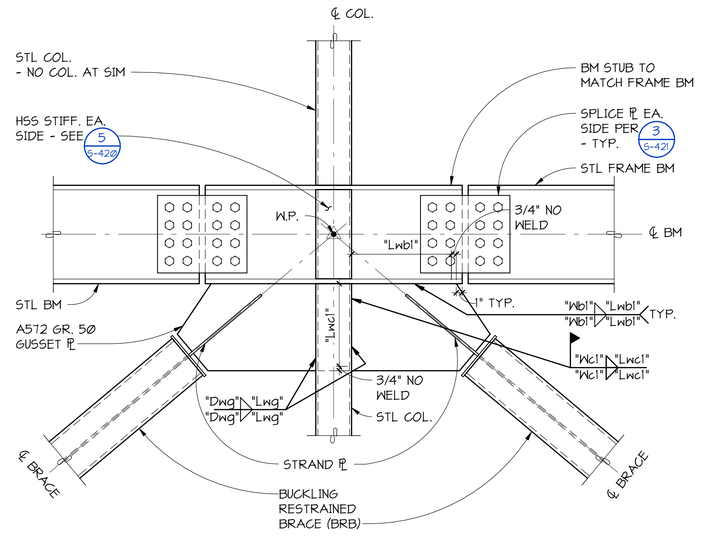

2 S-423 SECTION
1" = 1'-0"

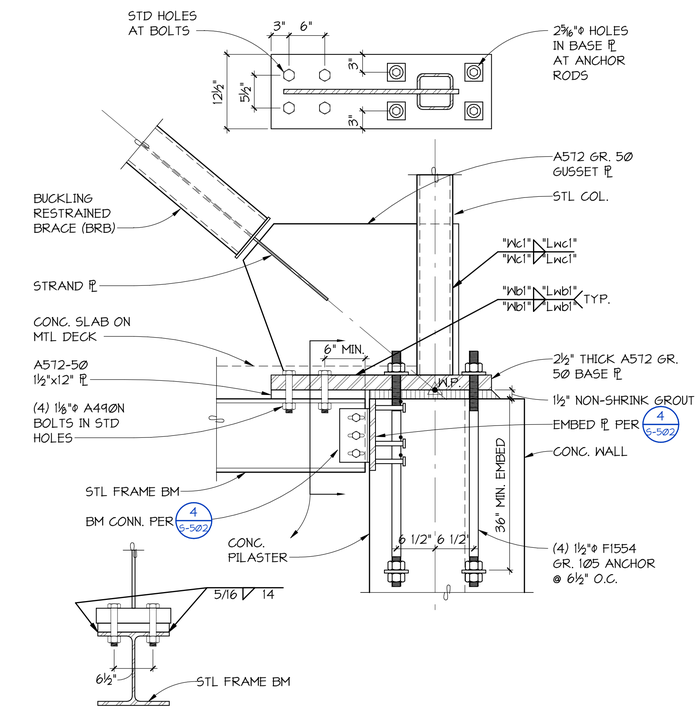

3 S-423 SECTION
1" = 1'-0"

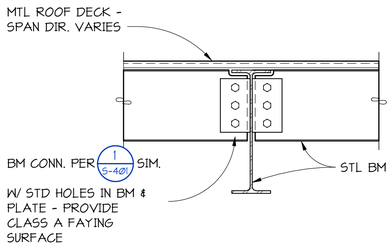

4 S-423 SECTION
1" = 1'-0"

anjali grant design LLC
3427 BEACON AVE S
SEATTLE 98144
ANJALI@AGRANTDESIGN.COM
206-512-4209

JAMES M. LINDSAY
33519
REGISTERED PROFESSIONAL ENGINEER
STATE OF WASHINGTON

PCS Structural Solutions
Seattle | Tacoma | Portland
www.pcs-structural.com

3700 E MERCER WAY
BARNABIE POINT PROJECT

NO.	DATE	DESCRIPTION

4 JUNE 2025
BUILDING PERMIT

PROJECT:

STEEL FRAMING DETAILS

S-423

12/15/2025 1:12:08:33 PM C:_Revit Models\25580 HNT Pa-12 R2024 (Central)_Dan4-PCS.rvt
© ANJALI GRANT DESIGN LLC ORIGINAL SHEET SIZE: 24" X 36"

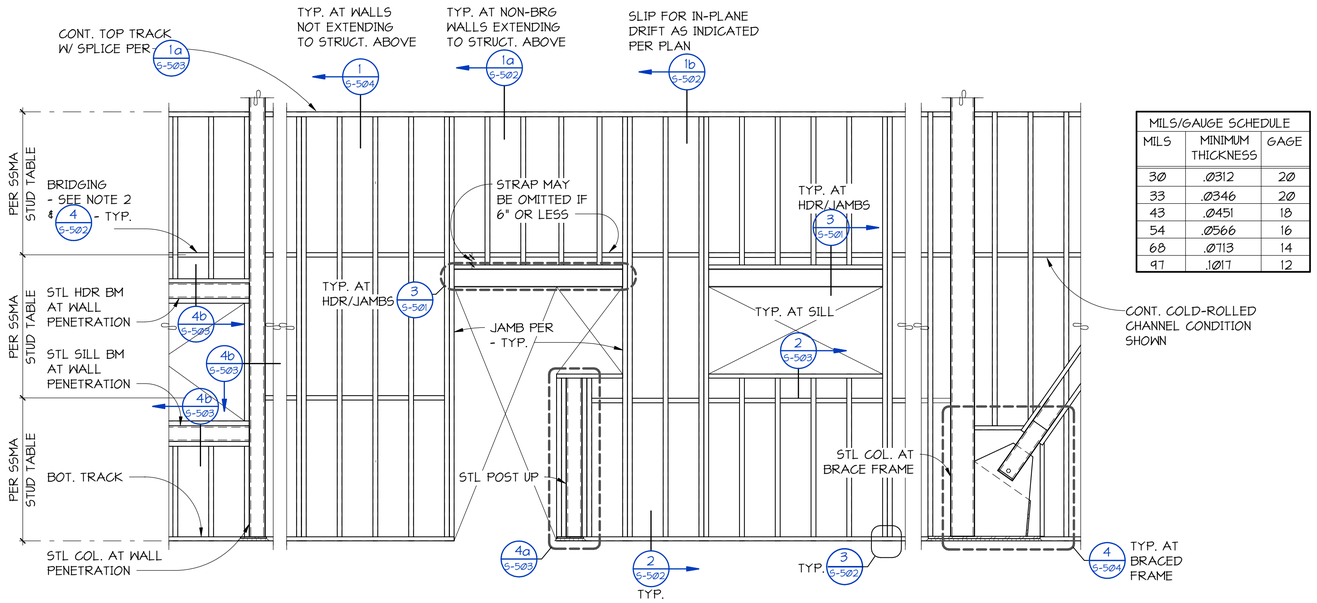

MILS/GAUGE SCHEDULE		
MILS	MINIMUM THICKNESS	GAGE
30	.0312	20
33	.0346	20
43	.0451	18
54	.0566	16
68	.0713	14
97	.1017	12

COLD-FORMED STEEL STUD WALL FRAMING NOTES:

1. ALL NON-BEARING WALL STUDS SHALL BE PER 2/S-501 UNLESS NOTED OTHERWISE. FOR WALL TYPE AND PROPER LOCATION SEE ARCHITECTURAL DRAWINGS.
2. PROVIDE BRIDGING AT ALL NON-BEARING WALLS WITHOUT FULL HEIGHT QUALIFIED SHEATHING EITHER SIDE OF STUD PER 4/S-502 NOTE #1.
3. FOR TYPICAL COLD-FORMED STEEL JOIST CEILING FRAMING SCHEDULE AND DETAIL - SEE 5/S-503.
4. ALL WELDS SHALL BE 1/8" FILLET MAXIMUM. FOR MATERIALS THINNER THAN Ø.15", EFFECTIVE THROAT SHALL NOT BE LESS THAN THINNEST MATERIAL. WELD IN ACCORDANCE WITH "STRUCTURAL WELDING CODE -- SHEET METAL" AWS D1.3.
5. STUD PUNCHOUTS SHALL NOT BE SPACED LESS THAN 24" ON CENTER, NOR WITHIN 10" CLEAR OF MEMBER END AT STUDS, HEADERS, BEAMS, JOISTS, ETC. FOR TYPICAL ALLOWABLE PUNCHOUT DETAIL - SEE 3/S-503.
6. SCREWS SHALL BE THREAD-FORMING OR THREAD-CUTTING, WITH OR WITHOUT A SELF DRILLING POINT. SCREWS SHALL BE INSTALLED AND TIGHTENED IN ACCORDANCE WITH THE MANUFACTURER'S RECOMMENDATION. MINIMUM SPACING IS THREE SCREW DIAMETERS. A MINIMUM OF (3) THREADS SHALL BE ENGAGED.
7. FOR TYPICAL COLD-FORMED STEEL WALL CORNER REQUIREMENTS - SEE 1b/S-503.
8. FOR POWDER ACTUATED FASTENER REQUIREMENTS - SEE GENERAL NOTES.

TYPICAL NON-BEARING COLD-FORMED STEEL STUD WALL FRAMING

1 S-501 ELEVATION

NO SCALE

EXTERIOR NON-BEARING COLD-FORMED STEEL WALL STUDS 20 PSF (ASD) LOAD, L/360 DEFLECTION LIMIT					
REQUIRED BRIDGING TYPE	STUD SIZE	STUD MIL			
		33 MIL	43 MIL	54 MIL	68 MIL
		STUDS SPACED @ 16" O.C. MAXIMUM			
		MAXIMUM STUD HEIGHT ALLOWED			
1 OR 2 OR 3	4005137	10'-11"	11'-11"	12'-9"	13'-7"
	4005162	11'-5"	12'-5"	13'-4"	14'-3"
	4005200	12'-0"	13'-2"	14'-1"	15'-1"
	6005137	15'-1"	16'-5"	17'-7"	18'-10"
	6005162	15'-9"	17'-2"	18'-5"	19'-8"
	6005200	16'-6"	18'-0"	19'-4"	20'-9"
1 OR 3	8005137	-	20'-9"	22'-4"	23'-11"
	8005162	-	21'-7"	23'-2"	24'-11"
	8005200	-	22'-7"	24'-3"	26'-1"

INTERIOR NON-BEARING COLD-FORMED STEEL WALL STUDS 5 PSF (ASD) LIVE LOAD, L/360 DEFLECTION LIMIT			
REQUIRED BRIDGING TYPE	STUD SIZE	STUD MIL	
		18 MIL	33 MIL
		STUD SPACING	
		16" O.C.	16" O.C.
		MAXIMUM STUD HEIGHT ALLOWED	
4	1625125	8'-2"	8'-5"
	2506125	9'-10"	11'-2"
	3625125	12'-4"	14'-3"
	4005125	13'-4"	15'-11"
	6005125	17'-11"	21'-4"
REQUIRED BRIDGING TYPE	STUD SIZE	STUD MIL	
		43 MIL	54 MIL
		STUD SPACING	
		16" O.C.	16" O.C.
		MAXIMUM STUD HEIGHT ALLOWED	
1 OR 2 OR 3 OR 4	4005137	17'-2"	18'-5"
	4005162	18'-0"	19'-3"
	4005200	19'-0"	20'-4"
	6005137	23'-8"	25'-5"
	6005162	24'-9"	26'-6"
	6005200	26'-0"	27'-11"
1 OR 3 OR 4	8005137	30'-0"	32'-2"
	8005162	31'-2"	33'-6"
	8005200	32'-7"	35'-0"

NOTES:

1. FOR TYPICAL COLD-FORMED STEEL WALL STUD BRIDGING DETAIL SEE 4/S-502.
2. INFORMATION SHOWN FOR S125 STUDS TAKEN FROM THE GYPSUM CONSTRUCTION HAND BOOK BY CGC INC. - INFORMATION SHOWN FOR ALL OTHER STUDS TAKEN FROM ICC ES LEGACY REPORT ER-4943P*.
3. 43 MIL MINIMUM REQUIRED AT MASONRY VENEER.

2 S-501 SCHEDULE

NO SCALE

NOTES:

1. FOR CONNECTION TO STRUCTURE ABOVE - SEE 1/S-502 & 1/S-504.
2. FOR CONNECTION TO STRUCTURE BELOW - SEE 2/S-502.
3. HEADER AND STUDS SHALL BE CONTINUOUS - NO SPLICES ALLOWED.

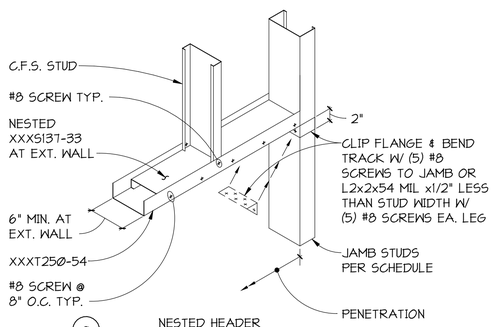

a NESTED HEADER
4'-0" MAXIMUM PENETRATION SIZE
(NOT ALLOWED AT DOORS)
(6005 MINIMUM AT EXTERIOR)

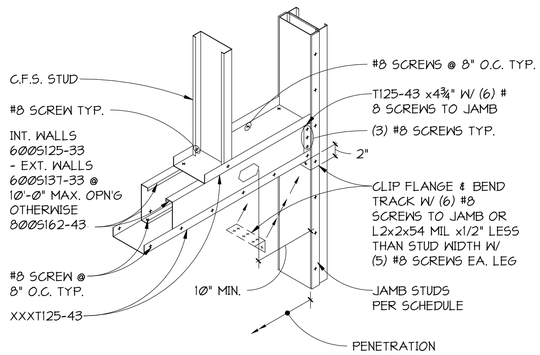

b BOX HEADER
12'-0 MAXIMUM PENETRATION UNLESS NOTED OTHERWISE
8'-0' MAXIMUM PENETRATION AT 4" EXTERIOR WALL
10'-0" MAXIMUM PENETRATION AT 4" OR 3⅝" INTERIOR WALL

EXTERIOR NON-BEARING COLD FORMED STEEL STUD WALL PENETRATION JAMB SCHEDULE 20 PSF (ASD) WIND LOAD									
STUD SIZE AND MIL	MAXIMUM PENETRATION (FEET)	MINIMUM NUMBER STUD(S) AT JAMB							
		(1)		(2)		(3)		(4)	
		HORIZONTAL DEFLECTION LIMIT OF WALL HEIGHT							
		L / 360	L / 600	L / 360	L / 600	L / 360	L / 600	L / 360	L / 600
		MAXIMUM JAMB HEIGHT (FEET)							
4005137-33	4	9	-	12	10	14	11	15	13
	8	-	-	-	-	11	9	12	10
6005137-33	4	11	11	15	14	16	16	16	16
	8	-	-	-	-	11	11	15	14
	12	-	-	-	-	-	-	10	10
8005162-43	4	16	16	16	16	16	16	16	16
	8	12	12	16	16	16	16	16	16
	12	9	9	11	11	12	12	16	16

INTERIOR NON-BEARING COLD FORMED STEEL STUD WALL PENETRATION JAMB SCHEDULE 5 POUNDS PER SQUARE FOOT (ASD) LIVE LOAD - L/360									
STUD SIZE AND MIL	MAXIMUM PENETRATION (FEET)	MINIMUM NUMBER OF BUILT-UP STUDS AT JAMB			STUD DEPTH	STUD WIDTH AND MIL	MAXIMUM PENETRATION WIDTH (FEET) WITH SINGLE JAMB STUD		
		(2)	(3)	(4)			(4)	(8)	(12)
		MAXIMUM JAMB HEIGHT (FEET)					MAXIMUM JAMB HEIGHT (FEET)		
3625125-33 OR 4005125-33	4	12	15	-	3625 OR 4005	125-33	10	-	-
						137-43	12	-	-
	8	10	12	14		162-54	13	11	-
						200-54	14	12	10
6005125-33	4	16	-	-	6005	125-33	11	-	-
						137-43	14	-	-
	8	13	16	-		162-54	-	15	-
						200-54	-	-	15
	12	9	14	16					

TYPICAL NON-BEARING COLD-FORMED STEEL STUD WALL PENETRATION AT 16'-0" MAXIMUM STUD HEIGHT - JAMB STUD SCHEDULE

3 S-501 DETAIL

NO SCALE

3427 BEACON AVE S
SEATTLE 98144
ANJALI@AGRANTDESIGN.COM
206-512-4209

anjali grant design LLC

33519 STATE OF WASHINGTON ANJALI M. LIMBU REGISTERED PROFESSIONAL ENGINEER

PCS Structural Solutions
Seattle | Tacoma | Portland
www.pcs-structural.com

3700 E MERCER WAY
BARNABIE POINT PROJECT

NO.	DATE	DESCRIPTION
	4 JUNE 2025	BUILDING PERMIT

PROJECT:

COLD-FORMED STEEL FRAMING DETAILS

S-501

12/15/2025 12:08:36 PM C:\...\Revit Models\25500 HNT Ph-12 R2024 (Central)_DwnHPC9.rvt
© ANJALI GRANT DESIGN LLC ORIGINAL SHEET SIZE: 24" X 36"

SLOTTED TOP TRACK THICKNESS			
2½" TRACK WITH 3/4" GAP			
TRACK THICKNESS (MILS)	ALLOWABLE LOAD (POUNDS)	EXTERIOR WALL HEIGHT	INTERIOR WALL HEIGHT
33	106	10'-7"	31'-10"
43	174	17'-5"	52'-4"
54	344	34'-5"	
68	475	47'-7"	
3" MIN. TRACK W/ 1" GAP			
TRACK THICKNESS (MILS)	ALLOWABLE LOAD (POUNDS)	EXTERIOR WALL HEIGHT	INTERIOR WALL HEIGHT
33	47	NOT ALLOWED	14'-1"
43	92	NOT ALLOWED	27'-8"
54	177	17'-11"	
68	299	29'-11"	

*DISTANCE BETWEEN WALL STUD SUPPORTS

TOP TRACK SCHEDULE

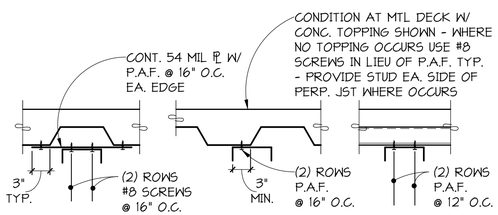

TOP TRACK TYPICAL CONNECTION TO STRUCTURE ABOVE

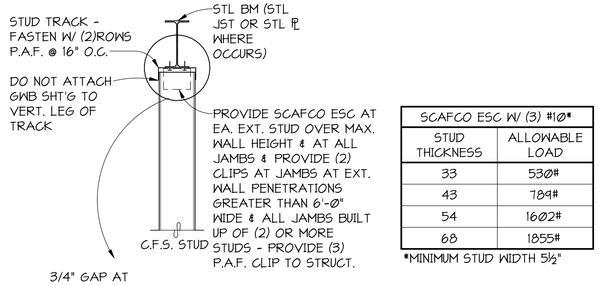

ⓐ SLOTTED TRACK CONNECTION

SCAFCO ESC W/ (3) #10*	
STUD THICKNESS	ALLOWABLE LOAD
33	530#
43	784#
54	1602#
68	1855#

*MINIMUM STUD WIDTH 5½"

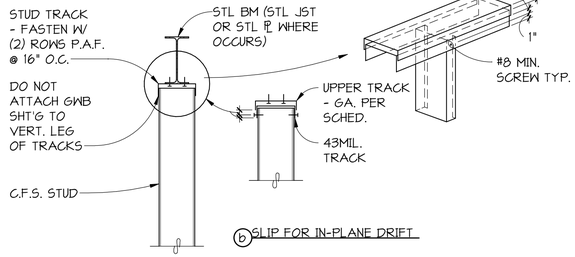

ⓑ SLIP FOR IN-PLANE DRIFT

TYPICAL NON-BEARING COLD-FORMED STEEL WALL EXTENDING TO STRUCTURE ABOVE

1 S-502 SECTION
NO SCALE

NOTE:
PROVIDE LOAD BEARING SHIMS OR GROUT BETWEEN UNDERSIDE OF WALL BOTTOM TRACK OR RIM TRACK AND SUPPORT BELOW AT STUD OR JOIST LOCATION WHERE GAP GREATER THAN 1/4" OCCURS.

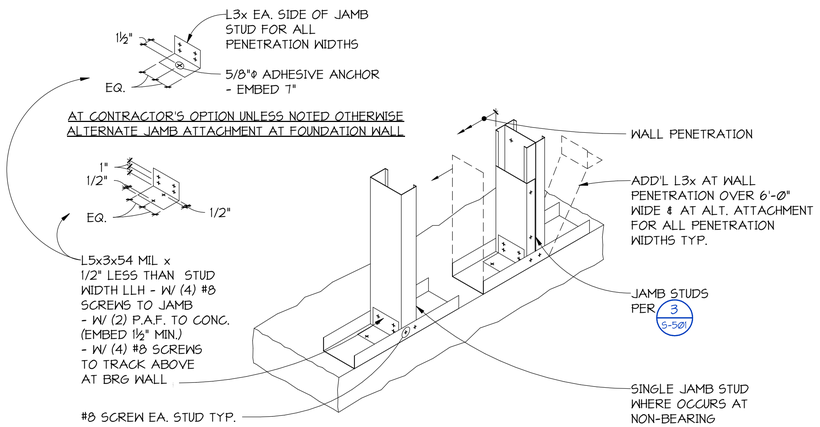

TYPICAL COLD-FORMED STEEL JAMB STUD ATTACHMENT

3 S-502 DETAIL
NO SCALE

NOTE:
PROVIDE LOAD BEARING SHIMS OR GROUT BETWEEN UNDERSIDE OF WALL BOTTOM TRACK OR RIM TRACK AND SUPPORT BELOW AT STUD OR JOIST LOCATION WHERE GAP GREATER THAN 1/4" OCCURS.

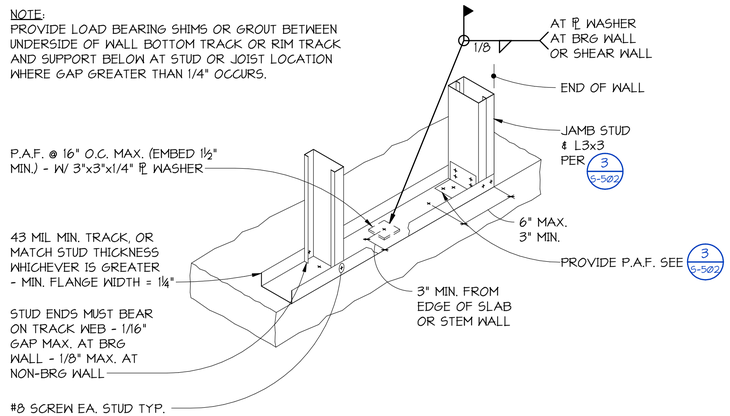

TYPICAL COLD-FORMED STEEL STUD AND TRACK ATTACHMENT

2 S-502 DETAIL
NO SCALE

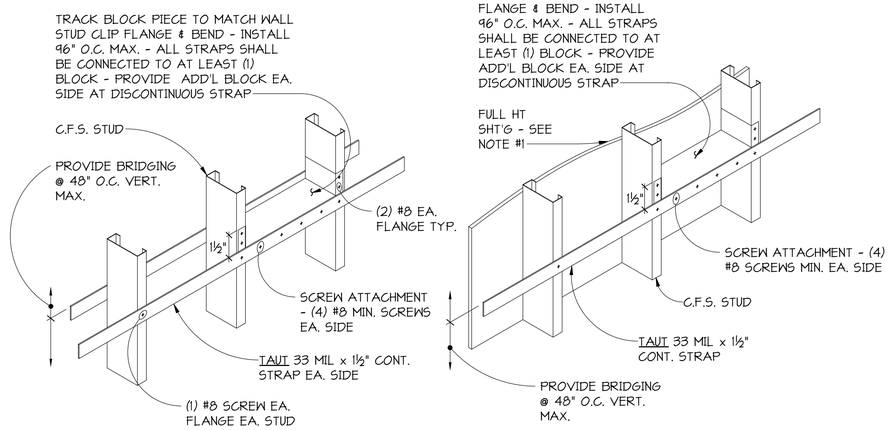

OPTION 1: BRIDGING CONSISTS OF DOUBLE FLAT STRAP WITH BLOCKING

OPTION 3: BRIDGING CONSISTS OF SINGLE FLAT STRAP WITH BLOCK AND FULL HEIGHT SHEATHING OPPOSITE FACE

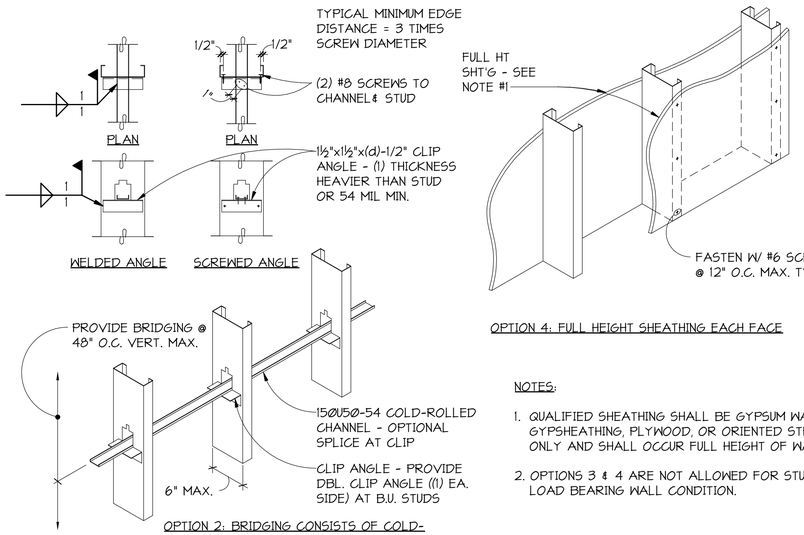

OPTION 2: BRIDGING CONSISTS OF COLD-ROLLED CHANNEL WITH CLIP ANGLE (6" MAXIMUM STUD SIZE)

OPTION 4: FULL HEIGHT SHEATHING EACH FACE

NOTES:

1. QUALIFIED SHEATHING SHALL BE GYPSUM WALL BOARD, GYPSHEATHING, PLYWOOD, OR ORIENTED STRAND BOARD ONLY AND SHALL OCCUR FULL HEIGHT OF WALL.
2. OPTIONS 3 & 4 ARE NOT ALLOWED FOR STUD BRACING AT LOAD BEARING WALL CONDITION.

TYPICAL BRIDGING AT COLD-FORMED STEEL WALL

4 S-502 DETAIL
NO SCALE

anjali grant design LLC
3427 BEACON AVE S
SEATTLE 98144
ANJALI@AGRANTDESIGN.COM
206-512-4209

ANJALI M. GRANT
STATE OF WASHINGTON
33519
REGISTERED PROFESSIONAL ENGINEER

PCS Structural Solutions
Seattle | Tacoma | Portland
www.pcs-structural.com

3700 E MERCER WAY
BARNABIE POINT PROJECT

NO.	DATE	DESCRIPTION
		4 JUNE 2025 BUILDING PERMIT

PROJECT:

COLD-FORMED STEEL FRAMING DETAILS

S-502

12/10/2025 12:08:37 PM C:_Revit Models\23080 HNT Pin 23 R2024 (Central)_Dsenk+PCS.rvt
© ANJALI GRANT DESIGN LLC ORIGINAL SHEET SIZE: 24" X 36"

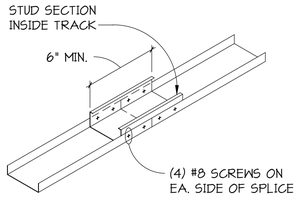

ⓐ TYPICAL COLD-FORMED STEEL BOTTOM/TOP TRACK SPLICE

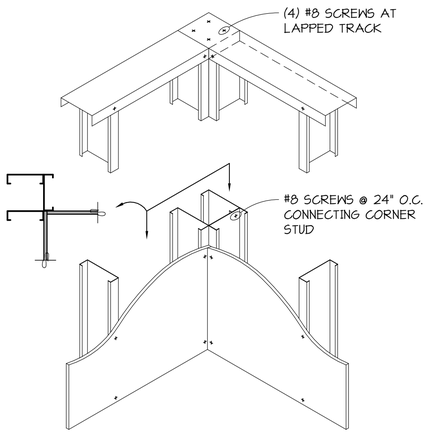

ⓑ TYPICAL COLD-FORMED STEEL WALL CORNER

1 DETAIL
5-503 NO SCALE

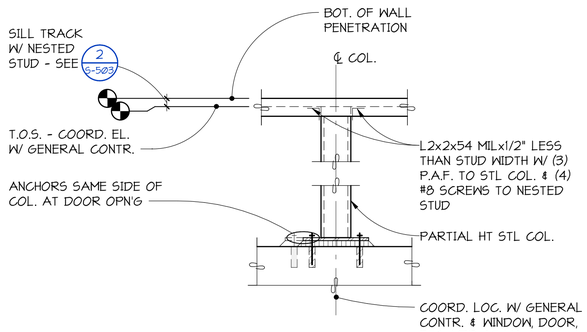

ⓐ CONDITION AT STEEL POST UP

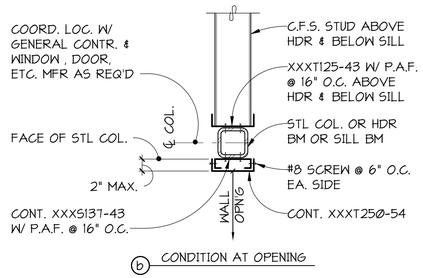

ⓑ CONDITION AT OPENING

4 DETAIL
5-503 NO SCALE

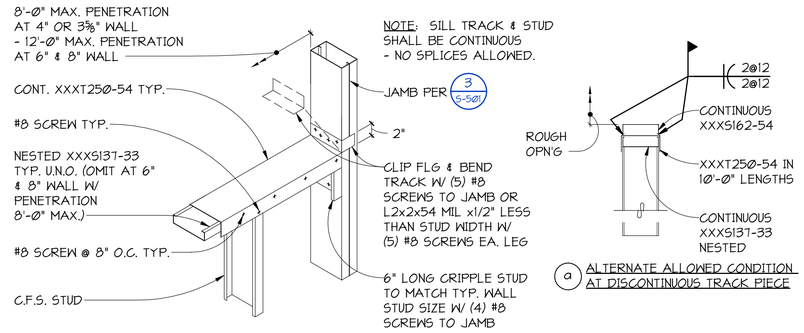

ⓐ ALTERNATE ALLOWED CONDITION AT DISCONTINUOUS TRACK PIECE

TYPICAL SILL AT COLD-FORMED STEEL WALL PENETRATION AT 16'-0" MAXIMUM STUD HEIGHT

2 DETAIL
5-503 NO SCALE

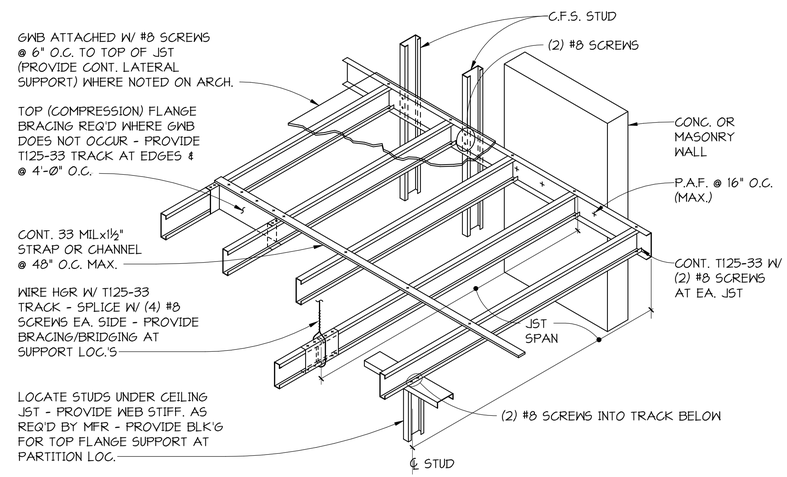

TYPICAL COLD-FORMED STEEL CEILING FRAMING DETAIL

COLD-FORMED STEEL JOIST CEILING FRAMING SCHEDULE 10 POUNDS PER SQUARE FOOT
(ASD) LIVE LOAD, 1/240 DEFLECTION LIMIT, (2) LAYERS MAXIMUM OF 5/8" GYPSUM WALL BOARD

JOIST SIZE	STUD MIL											
	18 MIL						33 MIL					
	JOIST SPACING											
	12" O.C.		16" O.C.		24" O.C.		12" O.C.		16" O.C.		24" O.C.	
	NUMBER OF CONTINUOUS SPANS											
	ONE	TWO+	ONE	TWO+	ONE	TWO+	ONE	TWO+	ONE	TWO+	ONE	TWO+
	MAXIMUM JOIST SPAN ALLOWED											
250S	6'-9"	6'-11	5'-4"	5'-9"	-	4'-4"	8'-3"	10'-0"	7'-6"	8'-9"	6'-4"	7'-1"
362S	7'-3"	6'-8"	5'-5"	5'-3"	-	-	11'-0"	13'-3"	10'-0"	11'-6"	8'-4"	9'-4"
400S	9'-0"	6'-3"	7'-6"	4'-10"	5'-0"	-	11'-11"	14'-3"	10'-10"	12'-4"	9'-0"	9'-9"
600S	-	-	-	-	-	-	16'-6"	16'-10"	14'-9"	13'-10"	12'-0"	10'-2"

NOTES:
1. BRACE TOP FLANGE AT 48" ON CENTER MAXIMUM.
2. INFORMATION SHOWN TAKEN FROM THE GYPSUM CONSTRUCTION HAND BOOK BY CGC INCORPORATED.
3. SEE ARCHITECTURAL DRAWING FOR LATERAL SUPPORT OF SUSPENDED FRAMING.

5 DETAIL
5-503 NO SCALE

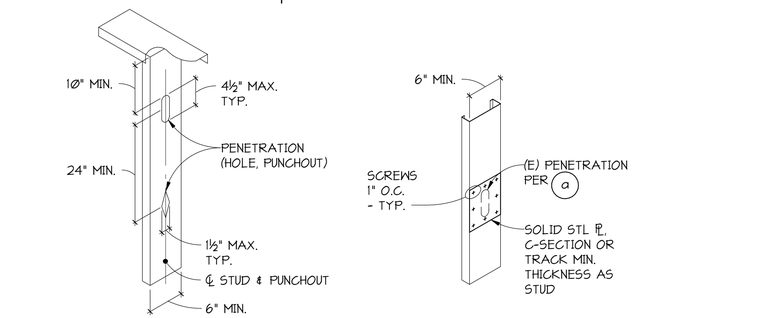

ⓐ TYPICAL ALLOWABLE COLD-FORMED STEEL STUD PUNCHOUT

ⓑ TYPICAL INFILL OF FACTORY COLD-FORMED STEEL STUD PUNCHOUT

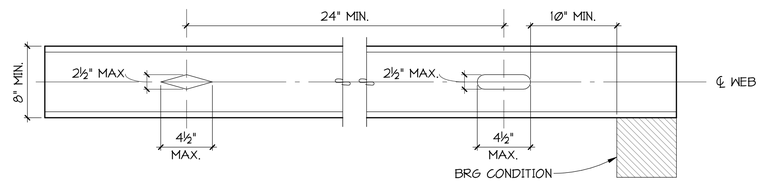

ⓒ TYPICAL ALLOWABLE COLD-FORMED STEEL JOIST PUNCHOUT

3 DETAIL
5-503 NO SCALE

anjali grant design LLC
3427 BEACON AVE S
SEATTLE 98144
ANJALI@AGRANTDESIGN.COM
206-512-4209

PCS Structural Solutions
Seattle | Tacoma | Portland
www.pcs-structural.com

3700 E MERCER WAY
BARNABIE POINT PROJECT

NO.	DATE	DESCRIPTION
		4 JUNE 2025 BUILDING PERMIT

PROJECT:

COLD-FORMED STEEL FRAMING DETAILS

S-503

12/15/2025 12:05:39 PM C:_Revit Models\23580 HNT Ph 12 R2024 (Central)_Dan#.PCS.rvt
© ANJALI GRANT DESIGN LLC ORIGINAL SHEET SIZE: 24" X 36"

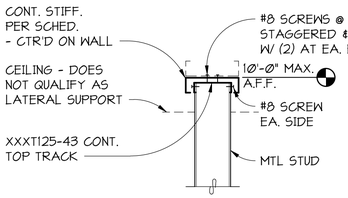

TOP OF WALL STIFFENER

TOP OF WALL STIFFENER SCHEDULE	
UNBRACED WALL LENGTH "L"	STIFFENER MEMBER CONTINUOUS
< 10'	NONE REQ'D
10'-13'	600S137-33
13'-16'	(2) 600S137-33
16'-24'	(2) 800S162-43

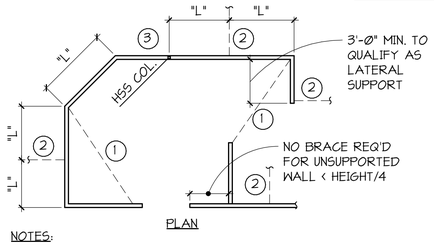

PLAN

NOTES:

1. THIS PLAN IS AN EXAMPLE ONLY. IT DOES NOT REPRESENT A SPECIFIC WALL.
2. "L" INDICATES UNBRACED LENGTH OF WALLS - SEE SCHEDULE FOR TOP OF WALL STIFFENER SIZE.
3. AT CONTRACTORS OPTION, IN LIEU OF TOP OF WALL STIFFENER:
   - (1) INDICATES HORIZONTAL BRACE EXTENDING TO ADJACENT CORNER - SEE 3/S-504.
   - (2) INDICATES BRACE UP TO STRUCTURE - SEE 2/S-504.
   - (3) INDICATES WALL BRACED AT HOLLOW STRUCTURAL SECTION COLUMN - PROVIDE L2"x2"x1/2" LESS THAN STUD WIDTH x54MIL WITH (4) #8 SCREWS TO TOP TRACK. - WELD CONNECTION ANGLE TO HOLLOW STRUCTURAL SECTION COLUMN OR PROVIDE (4) POWER ACTUATED FASTENERS AT CONTRACTOR'S OPTION.
4. ALL TOP TRACK SPLICES SHALL BE AT BRACE LOCATIONS.

TYPICAL LATERAL SUPPORT FOR COLD-FORMED STEEL STUD WALLS NOT EXTENDING TO STRUCTURE ABOVE

1 / S-504 DETAIL
NO SCALE

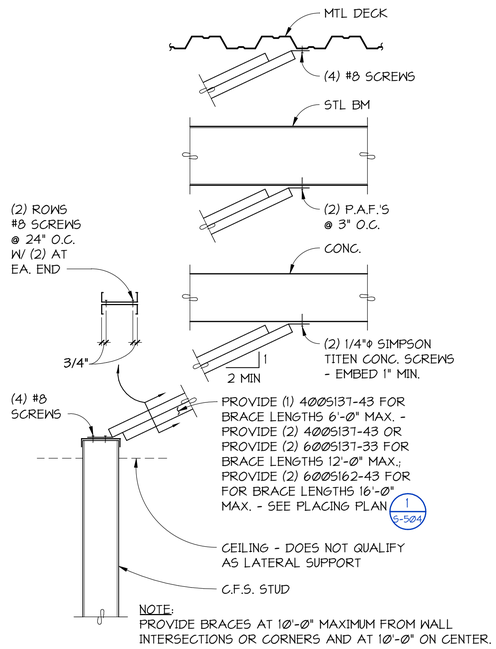

NOTE:
PROVIDE BRACES AT 10'-0" MAXIMUM FROM WALL INTERSECTIONS OR CORNERS AND AT 10'-0" ON CENTER.

TYPICAL COLD-FORMED STEEL STUD WALL BRACE UP TO STRUCTURE

2 / S-504 DETAIL
NO SCALE

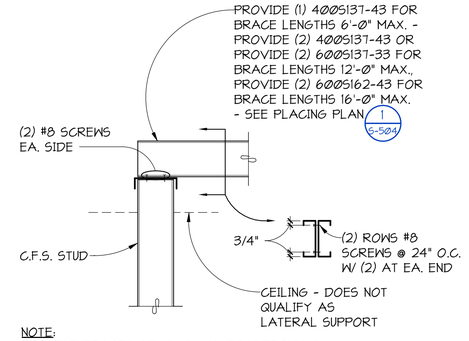

NOTE:
PROVIDE BRACES AT 10'-0" MAXIMUM FROM WALL INTERSECTIONS OR CORNERS AND AT 10'-0" ON CENTER.

TYPICAL COLD-FORMED STEEL STUD WALL HORIZONTAL BRACE

3 / S-504 DETAIL
NO SCALE

NOTES:

1. DETAIL SHOWS TOP CONDITION - BASE SIMILAR.
2. FOR TYPICAL WALL FRAMING DETAILS - SEE S-501, S-502, S-503, AND S-504.
3. NO POWER ACTUATED FASTENERS, SCREWS OR WELDING PERMITTED AT BRACE OR GUSSET IN PROTECTED (HATCHED) AREAS PER 2/S-420.
4. ATTACH TRACK TO BRACE WITH WELDS OR POWER ACTUATED FASTENERS IN NON-PROTECTED ZONES ONLY. USE EITHER WELD OR POWER ACTUATED FASTNERS AS NOTED.

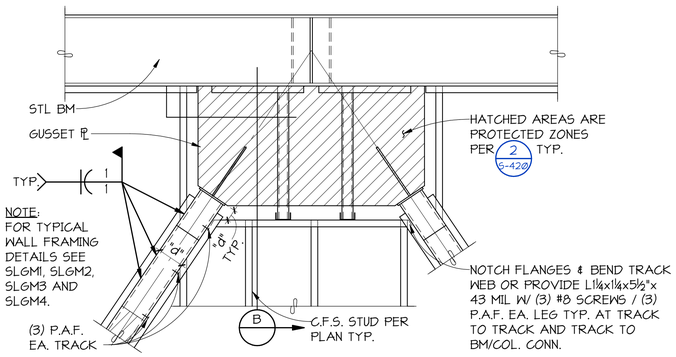

TYPICAL COLD-FORMED STEEL STUD FRAMING AT BRACED FRAME

4 / S-504 SECTION
NO SCALE

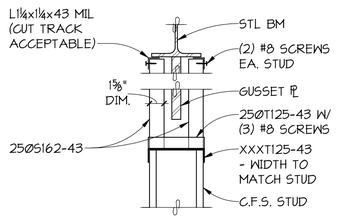

BRACE FRAME INFILL FRAMING AT STEEL BEAM

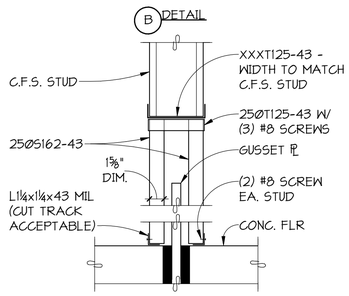

TYPICAL BRACE FRAME INFILL FRAMING AT FLOOR

3427 BEACON AVE S
SEATTLE 98144
ANJALI@AGRANTDESIGN.COM
206-512-4209
anjali grant design LLC

ANJALI M. GRANT
STATE OF WASHINGTON
33519
REGISTERED
PROFESSIONAL ENGINEER

PCS Structural Solutions
Seattle | Tacoma | Portland
www.pcs-structural.com

3700 E MERCER WAY
BARNABIE POINT PROJECT

NO.	DATE	DESCRIPTION

4 JUNE 2025
BUILDING PERMIT

PROJECT:

COLD-FORMED STEEL FRAMING DETAILS

S-504

12/10/2025 12:08:41 PM C:_Revit Models\23080 HNT Ph 2 R2024 (Central)_Dsjm4-PCS.rvt
© ANJALI GRANT DESIGN LLC ORIGINAL SHEET SIZE: 24" X 36"

FINISH REQUIREMENTS PER TABLE 803.13

GROUP A-3
- B AT CORRIDORS & EXIT WAYS
- C AT ROOMS AND ENCLOSED SPACES

GROUPS B, E
- B AT INTERIOR STAIRS
- C AT CORRIDORS, ROOMS AND ENCLOSED SPACES

803.15.1.1 Furred Construction
If the interior finish material is applied to furring strips, the intervening spaces between such furring strips shall:
be filled with material that is inorganic/noncombustible; be filled with material that meets the requirements of a Class A material per Section 803.1.1/803.1.2; be fireblocked at not greater than 8 feet in every direction in accordance with Section 718; OR the materials used to create the concealed space shall be noncombustible.

806.2 Combustible Decorative Materials
Fixed or movable walls and partitions, paneling, wall pads and crash pads ... shall comply with Section 803.

PLAN NOTES

1. SITE INFORMATION SHOWN FOR REFERENCE ONLY. SEE CIVIL AND LANDSCAPE DRAWINGS FOR SCOPEOF WORK.
2. COMPLY WITH APPLICABLE CODES AND ORDINANCES IN FORCE AT TIME OF BUILDING PERMIT ISSUANCE.
3. READ, UNDERSTAND AND COMPLY WITH ALL APPLICABLE PROVISIONS OF THE CONSTRUCTION DOCUMENTS FOR THE PROJECT.
4. UNLESS OTHERWISE NOTED, PLAN DIMENSIONS SHOWN ARE TO THE FACE OF STUD AT NEW INTERIOR PARTITIONS.
5. VERIFY ALL DIMENSIONS, EXISITNG AND NEW CONDITIONS ON THE JOB BEFORE PROCEEDING WITH THE WORK.
6. SEE INTERIOR ELEVATIONS FOR CASEWORK.
7. PROVIDE BLOCKING FOR ALL WALL MOUNTED ITEMS, INCLUDING FURNITURE, ALTERNATE AND FOIO ITEMS.

FIRE ASSEMBLY LEGEND

2 HOUR RATED ASSEMBLY

1 HOUR RATED ASSEMBLY

KEYNOTES

	Keynote Text
6.1	(6) ADJUSTABLE SHELVES AND STANDARDS, 7' TALL, 18" DEEP
6.18	ADJUSTABLE SHELVES AND STANDARDS, 12" DEEP
10.21	10 44 00 SEMI-RECESSED FIRE EXTINGUISHER CABINET
10.23	10 44 00 SURFACE-MOUNTED FIRE EXTINGUISHER
11.2	FOIC ELECTRIC KILN COMPLYING WITH UL 499 (PER 923.1 IMC)
11.11	FUME HOOD WITH VENTED STORAGE
11.16	FOIO COPY MACHINE
11.23	CONDENSING DRYER
12.10	FOIO TV
22.1	EYEWASH STATION, SEE PLUMBING DRAWINGS
22.2	BUSHMAN 265 RAINWATER TANK WITH FIRST FLUSH DIVERTER; CONNECT OVERFLOW TO STORM SYSTEM
23.1	EQUIPMENT PER MECH DRAWINGS
26.4	TRANSFORMER PER ELECTRICAL DRAWINGS
32.3	7' HIGH CHAINLINK FENCE PARTITION

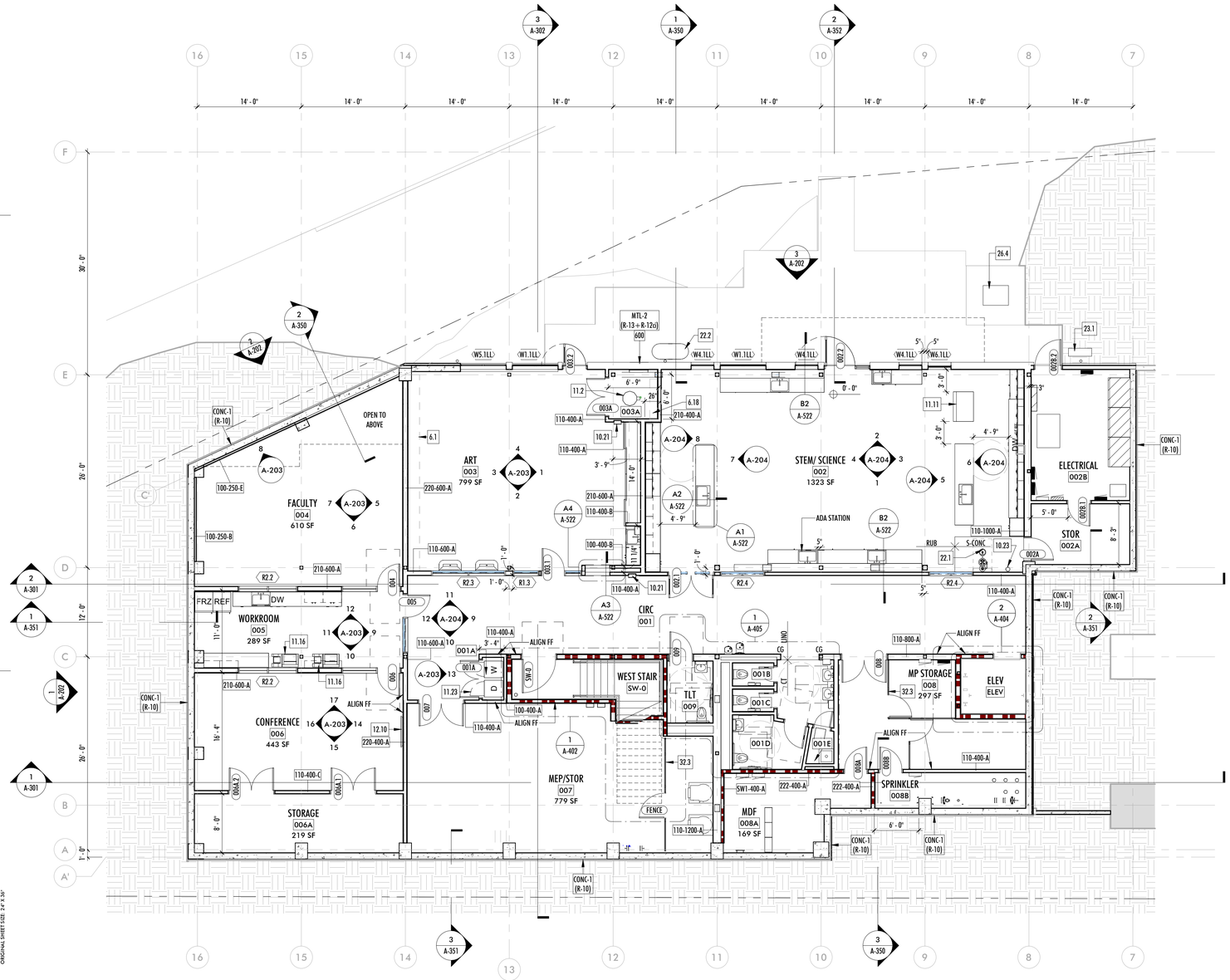

1 LEVEL B01 FLOOR PLAN
1/8" = 1'-0"

3427 BEACON AVE S
SEATTLE 98144
ANJALI@AGRANTDESIGN.COM
206-512-4209

anjali grant design LLC

3700 E MERCER WAY
BARNABIE POINT PROJECT

NO.	DATE	DESCRIPTION
1	10/22/2025	BLDG PERMIT CORRECTIONS

4 JUNE 2025
BUILDING PERMIT

PROJECT:

B01 FLOOR PLAN

A-100

12/15/2025 1:31:38 PM C:\Users\EashaYadav\Documents\BPP_PS8_R24_CD_eashaTR05R.rvt
© ANJALI GRANT DESIGN LLC ORIGINAL SHEET SIZE: 24" X 36"

KEYNOTES

Keynote Text



1 LEVEL B01 FURN PLAN
1/8" = 1'-0"

3427 BEACON AVE S
SEATTLE 98144
ANJALI@AGRANTDESIGN.COM
206-512-4209

anjali grant design LLC

3700 E MERCER WAY
BARNABIE POINT PROJECT

NO.	DATE	DESCRIPTION
	4 JUNE 2025	BUILDING PERMIT

PROJECT:

B01 FURN PLAN

A-100F

12/15/2025 1:31:39 PM C:\Users\EashaYadav\Documents\BPP_PS8_R24_CD_eashaTB5SR.rvt
© ANJALI GRANT DESIGN LLC ORIGINAL SHEET SIZE: 24" X 36"

3427 BEACON AVE S
SEATTLE 98144
ANJALI@AGRANTDESIGN.COM
206-512-4209

anjali grant design LLC

CONC, SEALED	CT-2	RUBBER
CPT-1	EPOXY	WOM
CPT-2	LINO-1	
CPT-3	LINO-2	
CT-1	RAF	

FINISH LEGEND

ACT	09 51 13 ACOUSTICAL CEILING TILE
BC	09 29 00 BULLNOSE CORNER
CG	CORNER GUARD
CONC-S	03 30 00 SEALED CONCRETE
CPT	09 68 13 CARPET TILE
CT	09 30 00 CERAMIC TILE
EPOXY	09 67 23 EPOXY COATING SYSTEM
FRL	06 83 00 FIBERGLASS REINFORCED LAMINATE
FRP	06 83 00 FIBERGLASS REINFORCED PANEL
GB, GWB	09 29 00 GYPSUM BOARD
HPL	06 41 16 HIGH-PRESSURE LAMINATE (CASEWORK SHALL BE HPL UNLESS NOTED AS WD)
LINO	09 65 43 LINOLEUM
PT	09 90 00 PAINT
RB	09 65 13 RUBBER BASE
RUBBER	09 65 19 RUBBER SHEET FLOORING
SC	SELF-COVE
RAF	09 65 66 RESILIENT ATHLETIC FLOORING
WD	06 41 13 WOOD (CLASS B FLAME SPREAD/SMOKE-DEVELOPED INDEX WHERE INDICATED)
WOM	12 48 13 WALK OFF MAT

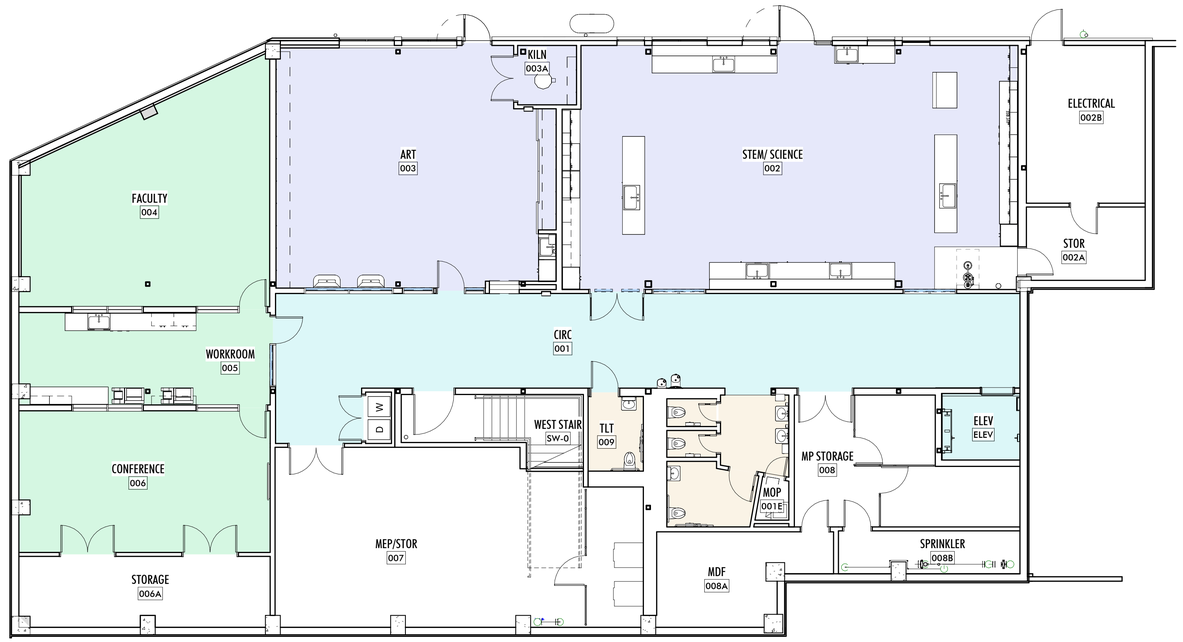

1 LEVEL B01 FINISH FLOOR PLAN
1/8" = 1'-0"

3700 E MERCER WAY
BARNABIE POINT PROJECT

NO.	DATE	DESCRIPTION
	4 JUNE 2025	BUILDING PERMIT

PROJECT:

B01 FLOOR FINISH PLAN

A-100FF

12/15/2025 1:31:40 PM C:\Users\EashaYadav\Documents\BPP_PS8_R24_CD_eashaTB05R.rvt
© ANJALI GRANT DESIGN LLC ORIGINAL SHEET SIZE: 24" X 36"

FINISH REQUIREMENTS PER TABLE 803.13

GROUP A-3
- B AT CORRIDORS & EXIT WAYS
- C AT ROOMS AND ENCLOSED SPACES

GROUPS B, E
- B AT INTERIOR STAIRS
- C AT CORRIDORS, ROOMS AND ENCLOSED SPACES

803.15.1.1 Furred Construction
If the interior finish material is applied to furring strips, the intervening spaces between such furring strips shall:
be filled with material that is inorganic/noncombustible; be filled with material that meets the requirements of a Class A material per Section 803.1.1/803.1.2; be fireblocked at not greater than 8 feet in every direction in accordance with Section 718; OR the materials used to create the concealed space shall be noncombustible.

806.2 Combustible Decorative Materials
Fixed or movable walls and partitions, paneling, wall pads and crash pads ... shall comply with Section 803.

PLAN NOTES

1. SITE INFORMATION SHOWN FOR REFERENCE ONLY. SEE CIVIL AND LANDSCAPE DRAWINGS FOR SCOPEOF WORK.
2. COMPLY WITH APPLICABLE CODES AND ORDINANCES IN FORCE AT TIME OF BUILDING PERMIT ISSUANCE.
3. READ, UNDERSTAND AND COMPLY WITH ALL APPLICABLE PROVISIONS OF THE CONSTRUCTION DOCUMENTS FOR THE PROJECT.
4. UNLESS OTHERWISE NOTED, PLAN DIMENSIONS SHOWN ARE TO THE FACE OF STUD AT NEW INTERIOR PARTITIONS.
5. VERIFY ALL DIMENSIONS, EXISITNG AND NEW CONDITIONS ON THE JOB BEFORE PROCEEDING WITH THE WORK.
6. SEE INTERIOR ELEVATIONS FOR CASEWORK.
7. PROVIDE BLOCKING FOR ALL WALL MOUNTED ITEMS, INCLUDING FURNITURE, ALTERNATE AND FOIO ITEMS.

FIRE ASSEMBLY LEGEND

2 HOUR RATED ASSEMBLY

1 HOUR RATED ASSEMBLY

KEYNOTES

	Keynote Text
10.18	10 22 39 FOLDING PANEL PARTITION, 18' TALL
10.24	10 44 00 KNOX BOX 4300 VAULT FLUSH MOUNT AT 60" AFF PER IFC 506 AND CITY OF MI REQUIREMENTS. PROVIDE 2 SETS OF KEYS.
10.32	10 21 23 FABRIC CURTAIN
11.19	BASKETBALL HOOP
11.24	11 66 23 RECESSED VOLLEYBALL FLOOR SLEEVES
12.2	12 66 13 TELESCOPIC SEATING
12.5	FOIO CART FOR (40) 40/4 CHAIRS
32.3	7' HIGH CHAINLINK FENCE PARTITION
U-9.6	EXTEND RAF INTO POCKET TO ACHIEVE ACOUSTICAL SEAL

KEYNOTES

	Keynote Text
3.2	03 30 00 COORDINATE SLAB LAYOUT WITH FLOOR SINK AND GREASE TRAP
6.1	(6) ADJUSTABLE SHELVES AND STANDARDS, 7' TALL, 18" DEEP
6.6	10" WIDE BENCH/CANE RAIL
6.28	ADJUSTABLE SHELVES AND STANDARDS, 14" DEEP
9.4	3' 8" HIGH WOOD WRAP AT COLUMN; (2) WELDED EYEBOLTS AT 7'-2" AFF
9.10	09 22 16 / 09 29 00 AT CLIMBING WALL PROVIDE 18" GA MIN STUDS AND 5/8" DENSGLASS IN LIEU OF GWB
9.12	WRAP GWB LAYERS OF ACOUSTIC ASSEMBLY AROUND INSIDE OF RECESS PER 1/A-701
10.4	10 22 39 FOLDING PANEL PARTITION, 22' TALL
10.6.1	10 44 00 FULLY RECESSED FIRE EXTINGUISHER CABINET, LOCATE ABOVE LIGHT SWITCH (NON-ADA)

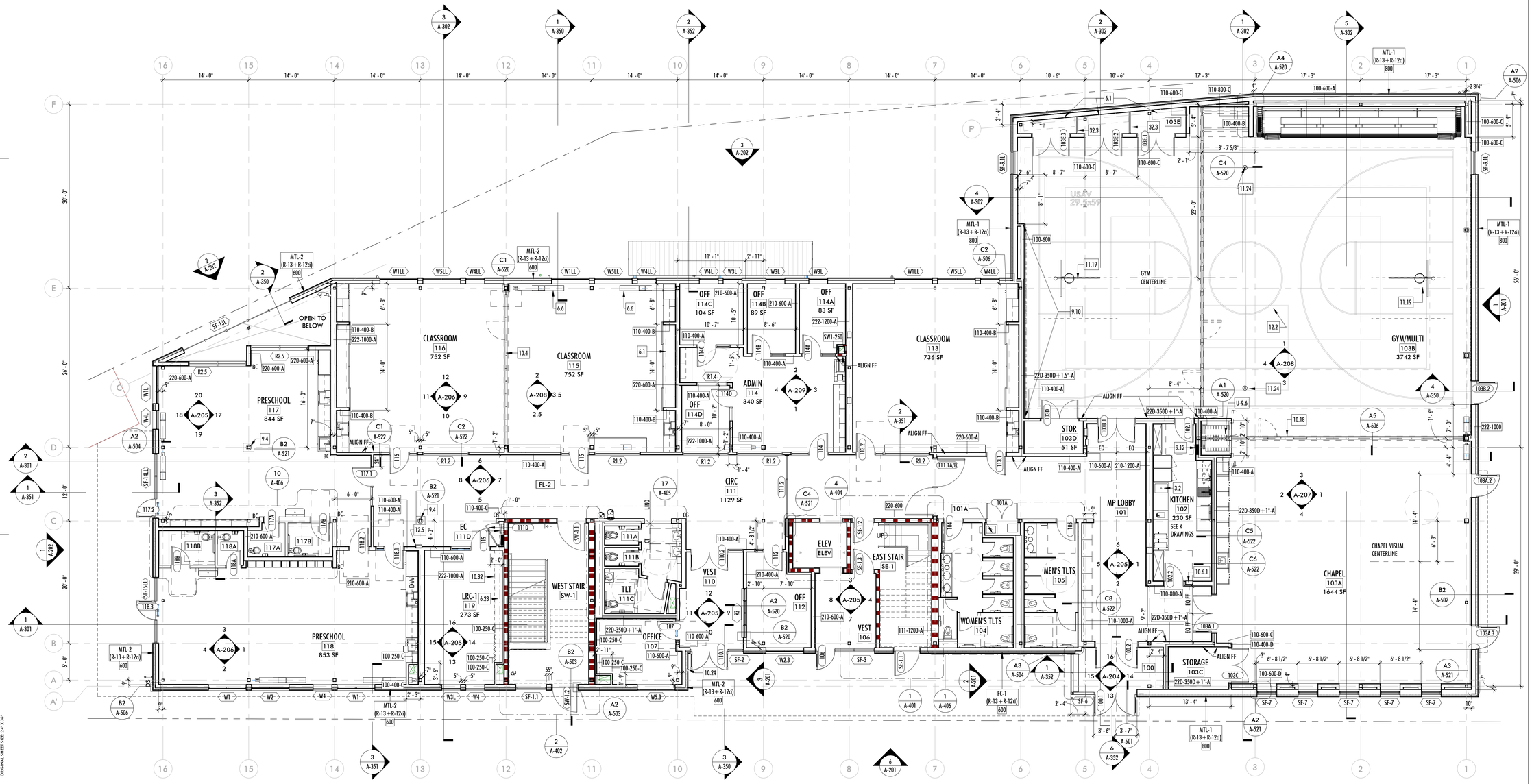

1 LEVEL 01
1/8" = 1'-0"

3427 BEACON AVE S
SEATTLE 98144
ANJALI@AGRANTDESIGN.COM
206-512-4209

anjali grant design LLC

3700 E MERCER WAY
BARNABIE POINT PROJECT

NO.	DATE	DESCRIPTION
1	10/22/2025	BLDG PERMIT CORRECTIONS

4 JUNE 2025
BUILDING PERMIT

PROJECT:

L01 FLOOR PLAN

A-101

12/12/2025 2:43:03 PM C:\Users\EashaYadav\Documents\BPP_PS8_R24_CD_eashaTB50R.rvt
© ANJALI GRANT DESIGN LLC ORIGINAL SHEET SIZE: 24" X 36"

KEYNOTES	
	Keynote Text
12.2	12 66 13 TELESCOPIC SEATING
12.8	FOIO PORTABLE STAGE WITH RAMP

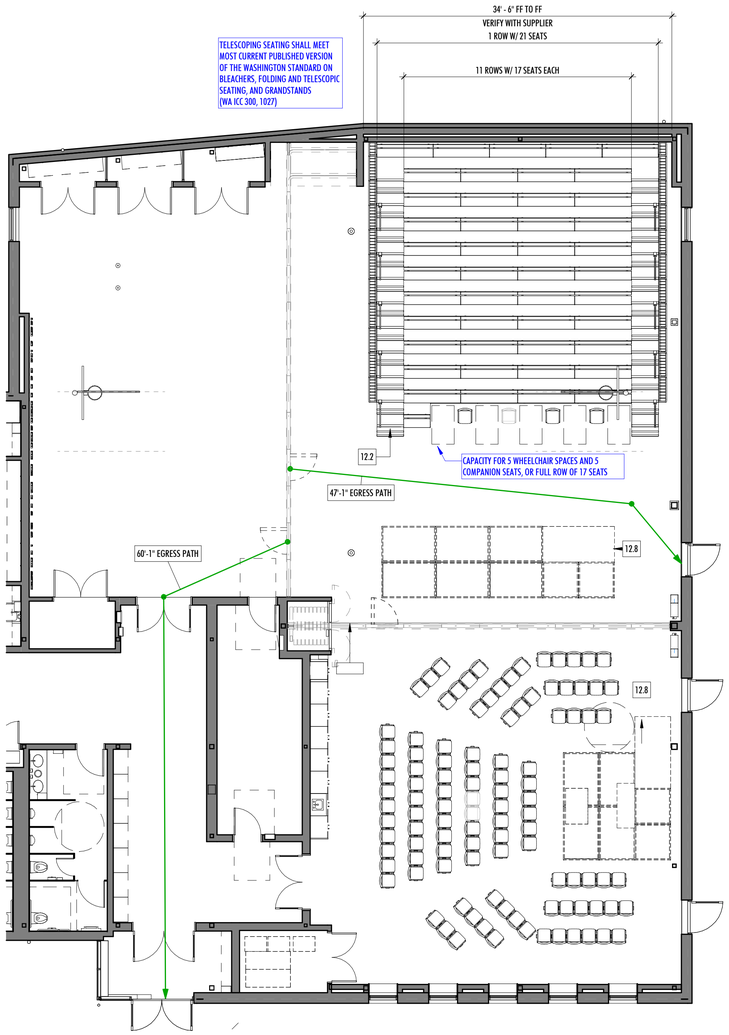

3 ASSEMBLY + 100-PERSON CHAPEL
1/8" = 1'-0"

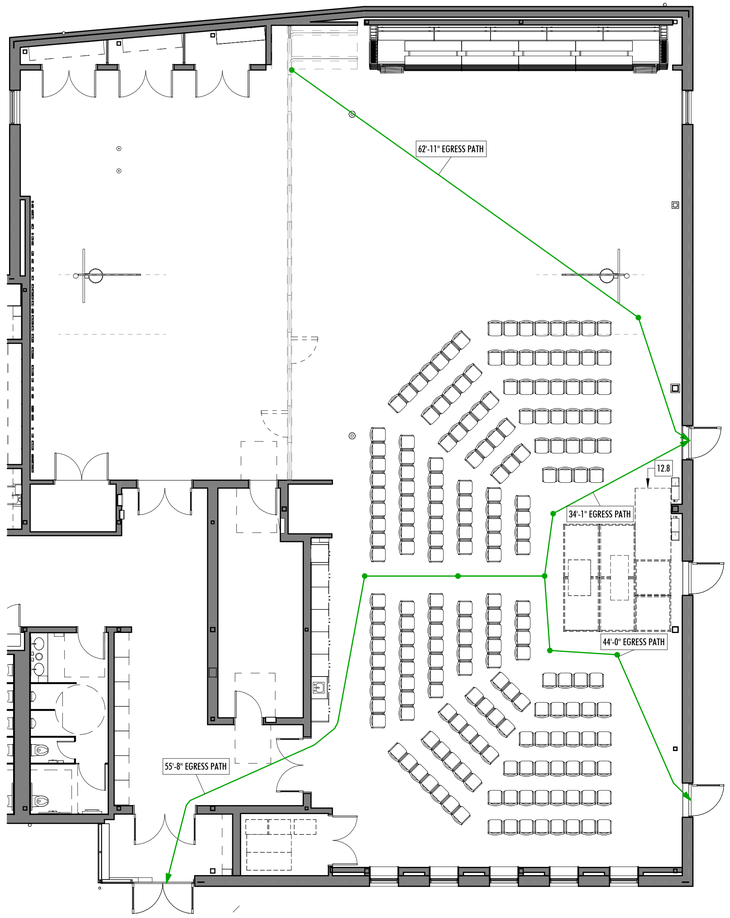

2 200-PERSON CHAPEL
1/8" = 1'-0"

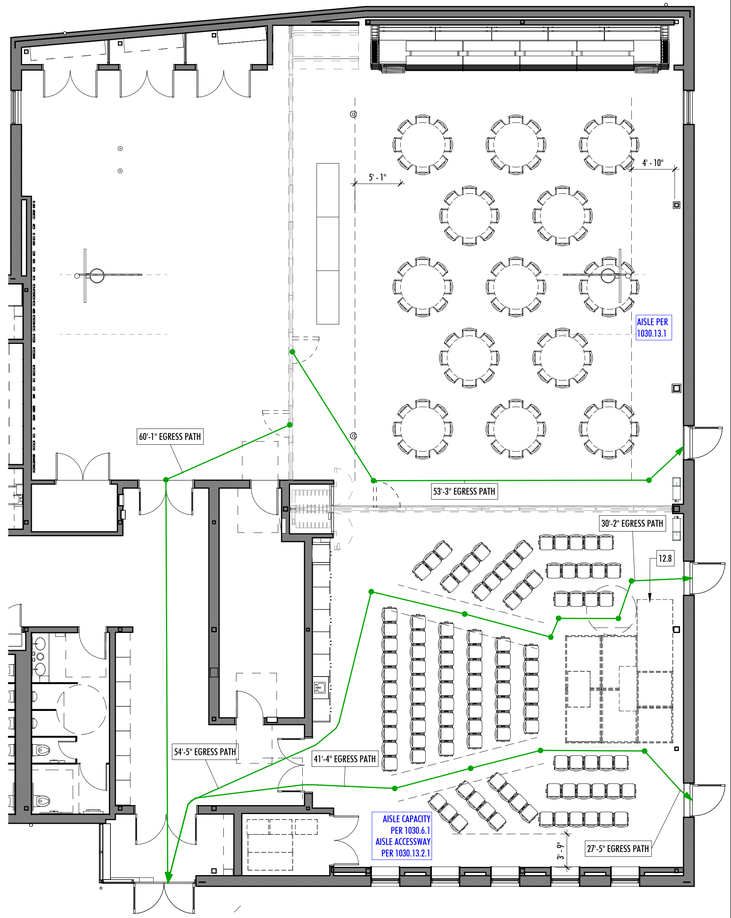

1 BANQUET SEATING + 100-PERSON CHAPEL
1/8" = 1'-0"

anjali grant design LLC
3427 BEACON AVE S
SEATTLE 98144
ANJALI@AGRANTDESIGN.COM
206-512-4209

3700 E MERCER WAY
BARNABIE POINT PROJECT

NO.	DATE	DESCRIPTION
	4 JUNE 2025	BUILDING PERMIT

PROJECT:

L01 ASSEMBLY PLANS

A-101A

12/12/2025 2:43:08 PM C:\Users\Eamon\Desktop\Documents\BPP_R24_CD_eastaTB50R.rvt
© ANJALI GRANT DESIGN LLC ORIGINAL SHEET SIZE: 24" X 36"

KEYNOTES

Keynote Text



1 LEVEL 01 FURN PLAN
1/8" = 1'-0"

3427 BEACON AVE S
SEATTLE 98144
ANJALI@AGRANTDESIGN.COM
206-512-4209

anjali grant design LLC

3700 E MERCER WAY
BARNABIE POINT PROJECT

NO.	DATE	DESCRIPTION
	4 JUNE 2025	BUILDING PERMIT

PROJECT:

L01 FURN PLAN

A-101F

12/12/2025 2:43:09 PM C:\Users\EashaYadav\Documents\BPP_PS8_R24_CD_eashaTB5SR.rvt
© ANJALI GRANT DESIGN LLC ORIGINAL SHEET SIZE: 24" X 36"

FINISH LEGEND

ACT	09 51 13 ACOUSTICAL CEILING TILE
BC	09 29 00 BULLNOSE CORNER
CG	CORNER GUARD
CONC-S	03 30 00 SEALED CONCRETE
CPT	09 68 13 CARPET TILE
CT	09 30 00 CERAMIC TILE
EPOXY	09 67 23 EPOXY COATING SYSTEM
FRL	06 83 00 FIBERGLASS REINFORCED LAMINATE
FRP	06 83 00 FIBERGLASS REINFORCED PANEL
GB, GWB	09 29 00 GYPSUM BOARD
HPL	06 41 16 HIGH-PRESSURE LAMINATE (CASEWORK SHALL BE HPL UNLESS NOTED AS WD)
LINO	09 65 43 LINOLEUM
PT	09 90 00 PAINT
RB	09 65 13 RUBBER BASE
RUBBER	09 65 19 RUBBER SHEET FLOORING
SC	SELF-COVE
RAF	09 65 66 RESILIENT ATHLETIC FLOORING
WD	06 41 13 WOOD (CLASS B FLAME SPREAD/SMOKE-DEVELOPED INDEX WHERE INDICATED)
WOM	12 48 13 WALK OFF MAT

CONC, SEALED	CT-2	RUBBER
CPT-1	EPOXY	WOM
CPT-2	LINO-1	
CPT-3	LINO-2	
CT-1	RAF	



1 LEVEL 01
1/8" = 1'-0"

3427 BEACON AVE S
SEATTLE 98144
ANJALI@AGRANTDESIGN.COM
206-512-4209

anjali grant design LLC

3700 E MERCER WAY
BARNABIE POINT PROJECT

NO.	DATE	DESCRIPTION
	4 JUNE 2025	BUILDING PERMIT

PROJECT:

L01 FINISH FLOOR PLAN

A-101FF

12/15/2025 1:31:41 PM C:\Users\EliashaYadav\Documents\BPP_PS8_R24_CD_eashaTB05R.rvt
© ANJALI GRANT DESIGN LLC ORIGINAL SHEET SIZE: 24" X 36"

FINISH REQUIREMENTS PER TABLE 803.13

GROUP A-3
- B AT CORRIDORS & EXIT WAYS
- C AT ROOMS AND ENCLOSED SPACES

GROUPS B, E
- B AT INTERIOR STAIRS
- C AT CORRIDORS, ROOMS AND ENCLOSED SPACES

803.15.1.1 Furred Construction
If the interior finish material is applied to furring strips, the intervening spaces between such furring strips shall:
be filled with material that is inorganic/noncombustible; be filled with material that meets the requirements of a Class A material per Section 803.1.1/803.1.2; be fireblocked at not greater than 8 feet in every direction in accordance with Section 718; OR the materials used to create the concealed space shall be noncombustible.

806.2 Combustible Decorative Materials
Fixed or movable walls and partitions, paneling, wall pads and crash pads ... shall comply with Section 803.

PLAN NOTES

1. SITE INFORMATION SHOWN FOR REFERENCE ONLY. SEE CIVIL AND LANDSCAPE DRAWINGS FOR SCOPEOF WORK.
2. COMPLY WITH APPLICABLE CODES AND ORDINANCES IN FORCE AT TIME OF BUILDING PERMIT ISSUANCE.
3. READ, UNDERSTAND AND COMPLY WITH ALL APPLICABLE PROVISIONS OF THE CONSTRUCTION DOCUMENTS FOR THE PROJECT.
4. UNLESS OTHERWISE NOTED, PLAN DIMENSIONS SHOWN ARE TO THE FACE OF STUD AT NEW INTERIOR PARTITIONS.
5. VERIFY ALL DIMENSIONS, EXISITNG AND NEW CONDITIONS ON THE JOB BEFORE PROCEEDING WITH THE WORK.
6. SEE INTERIOR ELEVATIONS FOR CASEWORK.
7. PROVIDE BLOCKING FOR ALL WALL MOUNTED ITEMS, INCLUDING FURNITURE, ALTERNATE AND FOIO ITEMS.

FIRE ASSEMBLY LEGEND

2 HOUR RATED ASSEMBLY

1 HOUR RATED ASSEMBLY

KEYNOTES

	Keynote Text
6.4	BENCH
6.6	10" WIDE BENCH/CANE RAIL
10.3	10 51 00 LOCKERS
10.4	10 22 39 FOLDING PANEL PARTITION, 22' TALL
10.7	10 14 00 ALUMINUM LETTERS WITH POWDERCOAT FINISH; BUILDING-MTD ON 1/2" STANDOFFS; CANOPY-MTD W/ CONCEALED BRACKETS TO FACE OF STEEL PURLINS; ISOLATE METALS WITH NEOPRENE WASHERS
10.17	10 11 00 SINGLE-TRACK SLIDING WHITEBOARD (IN FRONT OF TACKBOARD)
10.21	10 44 00 SEMI-RECESSED FIRE EXTINGUISHER CABINET
10.32	10 21 23 FABRIC CURTAIN

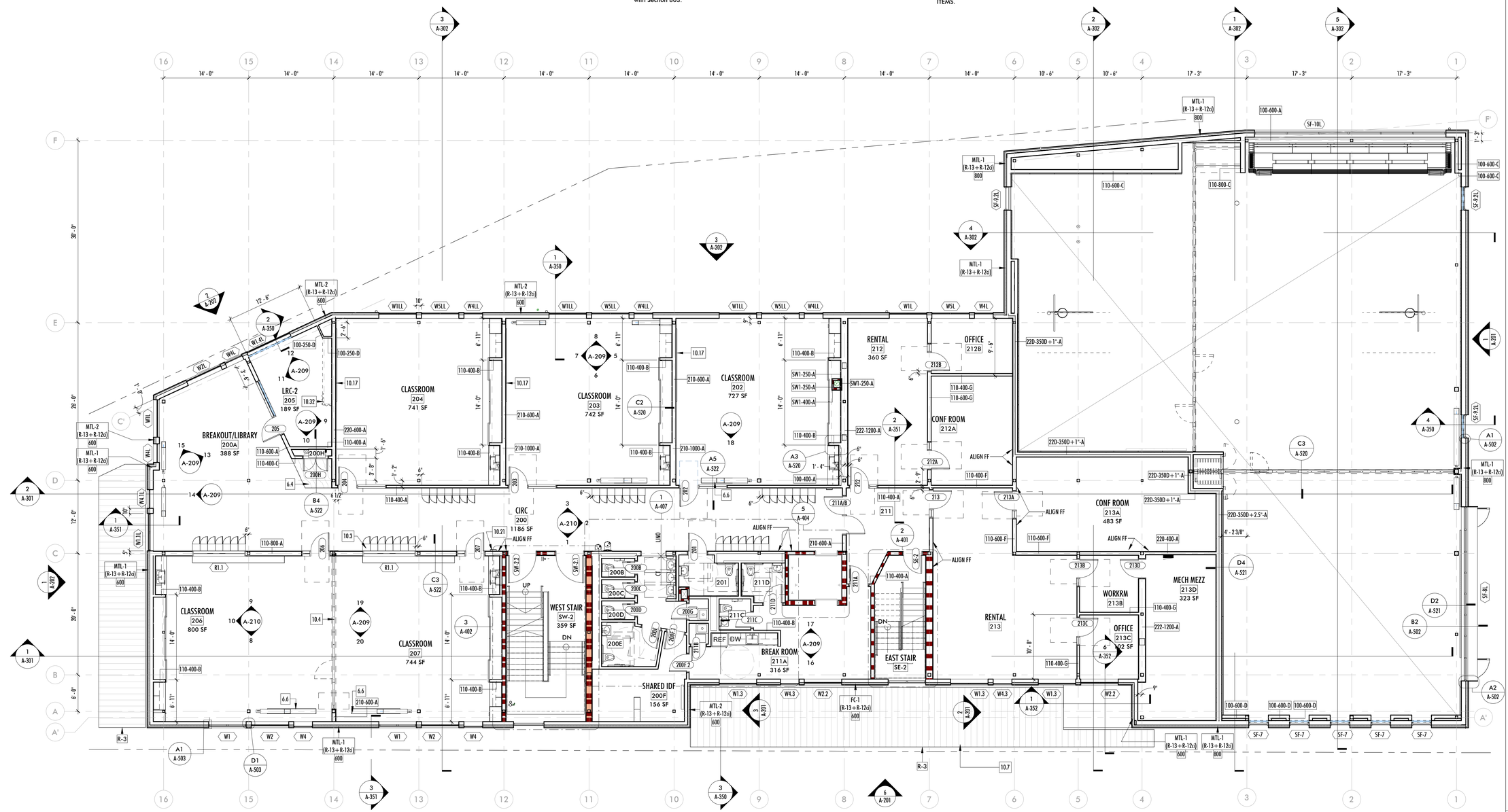

1 LEVEL 02
1/8" = 1'-0"

3427 BEACON AVE S
SEATTLE 98144
ANJALI@AGRANTDESIGN.COM
206-512-4209

anjali grant design LLC

3700 E MERCER WAY
BARNABIE POINT PROJECT

NO.	DATE	DESCRIPTION
1	10/22/2025	BLDG PERMIT CORRECTIONS

4 JUNE 2025
BUILDING PERMIT

PROJECT:

L02 FLOOR PLAN

A-102

12/12/2025 2:43:13 PM C:\Users\Eamin\Desktop\BP_PSB_R24_CD_eamin786586.rvt
© ANJALI GRANT DESIGN LLC ORIGINAL SHEET SIZE: 24" X 36"

KEYNOTES

Keynote Text

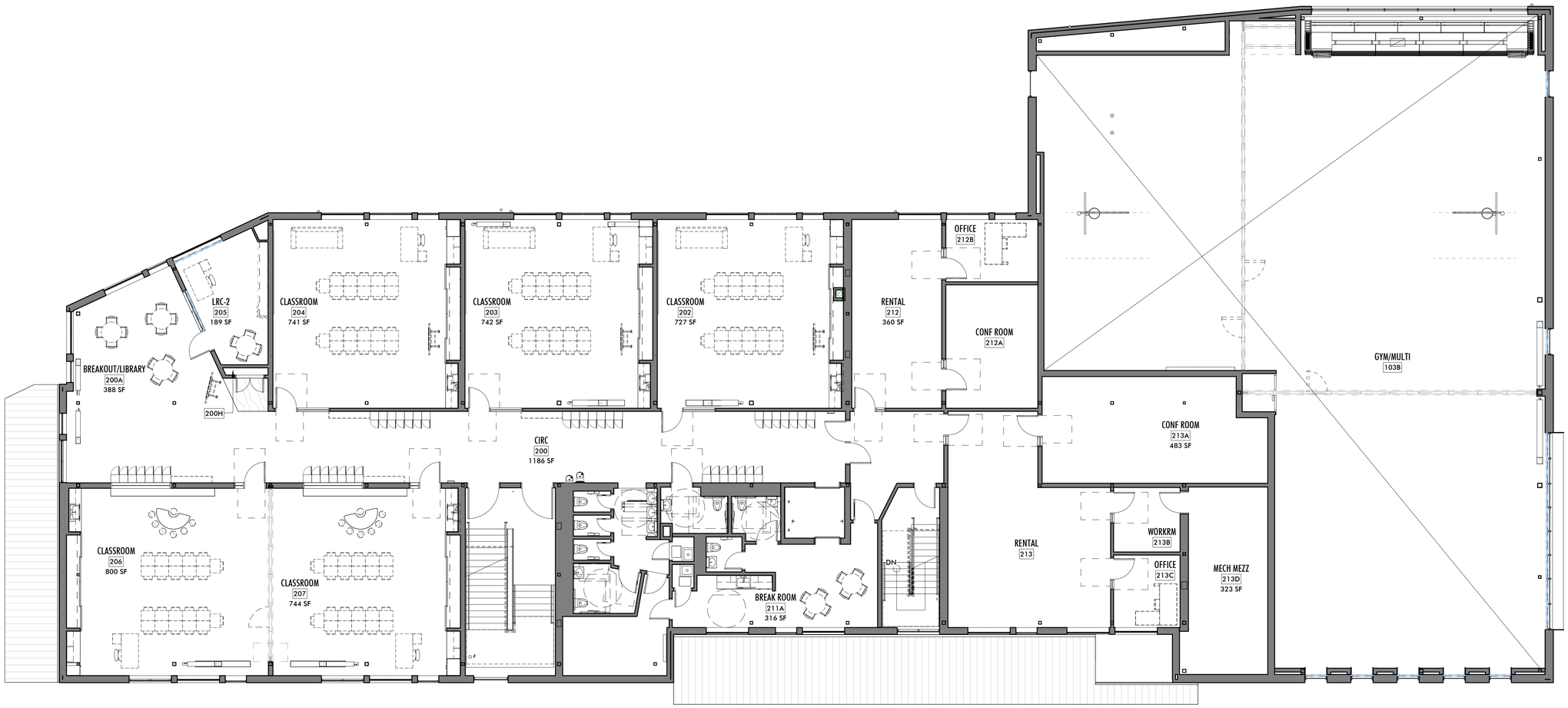

1 LEVEL 02 FURN PLAN
1/8" = 1'-0"

3427 BEACON AVE S
SEATTLE 98144
ANJALI@AGRANTDESIGN.COM
206-512-4209

anjali grant design LLC

3700 E MERCER WAY
BARNABIE POINT PROJECT

NO.	DATE	DESCRIPTION
	4 JUNE 2025	BUILDING PERMIT

PROJECT:

L02 FURN PLAN

A-102F

12/12/2025 2:43:16 PM C:\Users\EashaYadav\Documents\BPP_P08_R24_CD_eashaTB05R.rvt
© ANJALI GRANT DESIGN LLC ORIGINAL SHEET SIZE: 24" X 36"

FINISH LEGEND

ACT	09 51 13 ACOUSTICAL CEILING TILE
BC	09 29 00 BULLNOSE CORNER
CG	CORNER GUARD
CONC-S	03 30 00 SEALED CONCRETE
CPT	09 68 13 CARPET TILE
CT	09 30 00 CERAMIC TILE
EPOXY	09 67 23 EPOXY COATING SYSTEM
FRL	06 83 00 FIBERGLASS REINFORCED LAMINATE
FRP	06 83 00 FIBERGLASS REINFORCED PANEL
GB, GWB	09 29 00 GYPSUM BOARD
HPL	06 41 16 HIGH-PRESSURE LAMINATE (CASEWORK SHALL BE HPL UNLESS NOTED AS WD)
LINO	09 65 43 LINOLEUM
PT	09 90 00 PAINT
RB	09 65 13 RUBBER BASE
RUBBER	09 65 19 RUBBER SHEET FLOORING
SC	SELF-COVE
RAF	09 65 66 RESILIENT ATHLETIC FLOORING
WD	06 41 13 WOOD (CLASS B FLAME SPREAD/SMOKE-DEVELOPED INDEX WHERE INDICATED)
WOM	12 48 13 WALK OFF MAT

CONC, SEALED
CPT-1
CPT-2
CPT-3
CT-1
CT-2
EPOXY
LINO-1
LINO-2
RAF
RUBBER
WOM



1 LEVEL 02
1/8" = 1'-0"

3427 BEACON AVE S
SEATTLE 98144
ANJALI@AGRANTDESIGN.COM
206-512-4209

anjali grant design LLC

3700 E MERCER WAY
BARNABIE POINT PROJECT

NO.	DATE	DESCRIPTION
	4 JUNE 2025	BUILDING PERMIT

PROJECT:

L02 FINISH FLOOR PLAN

A-102FF

12/12/2025 2:43:18 PM C:\Users\EashaYadav\Documents\BPP_PS8_R24_CD_eashaTB55R.rvt
© ANJALI GRANT DESIGN LLC ORIGINAL SHEET SIZE: 24" X 36"

FINISH REQUIREMENTS PER TABLE 803.13

GROUP A-3
- B AT CORRIDORS & EXIT WAYS
- C AT ROOMS AND ENCLOSED SPACES

GROUPS B, E
- B AT INTERIOR STAIRS
- C AT CORRIDORS, ROOMS AND ENCLOSED SPACES

803.15.1.1 Furred Construction
If the interior finish material is applied to furring strips, the intervening spaces between such furring strips shall:
be filled with material that is inorganic/noncombustible; be filled with material that meets the requirements of a Class A material per Section 803.1.1/803.1.2; be fireblocked at not greater than 8 feet in every direction in accordance with Section 718; OR the materials used to create the concealed space shall be noncombustible.

806.2 Combustible Decorative Materials
Fixed or movable walls and partitions, paneling, wall pads and crash pads ... shall comply with Section 803.

PLAN NOTES

1. SITE INFORMATION SHOWN FOR REFERENCE ONLY. SEE CIVIL AND LANDSCAPE DRAWINGS FOR SCOPEOF WORK.
2. COMPLY WITH APPLICABLE CODES AND ORDINANCES IN FORCE AT TIME OF BUILDING PERMIT ISSUANCE.
3. READ, UNDERSTAND AND COMPLY WITH ALL APPLICABLE PROVISIONS OF THE CONSTRUCTION DOCUMENTS FOR THE PROJECT.
4. UNLESS OTHERWISE NOTED, PLAN DIMENSIONS SHOWN ARE TO THE FACE OF STUD AT NEW INTERIOR PARTITIONS.
5. VERIFY ALL DIMENSIONS, EXISITNG AND NEW CONDITIONS ON THE JOB BEFORE PROCEEDING WITH THE WORK.
6. SEE INTERIOR ELEVATIONS FOR CASEWORK.
7. PROVIDE BLOCKING FOR ALL WALL MOUNTED ITEMS, INCLUDING FURNITURE, ALTERNATE AND FOIO ITEMS.

FIRE ASSEMBLY LEGEND

2 HOUR RATED ASSEMBLY

1 HOUR RATED ASSEMBLY

KEYNOTES

	Keynote Text
5.5	ALTERNATING TREAD STAIR WITH PLATFORM
10.21	10 44 00 SEMI-RECESSED FIRE EXTINGUISHER CABINET
11.16	FOIO COPY MACHINE

anjali grant design LLC
3427 BEACON AVE S
SEATTLE 98144
ANJALI@AGRANTDESIGN.COM
206-512-4209

3700 E MERCER WAY
BARNABIE POINT PROJECT

NO.	DATE	DESCRIPTION
1	10/22/2025	BLDG PERMIT CORRECTIONS

4 JUNE 2025
BUILDING PERMIT

PROJECT:

L03 FLOOR PLAN

A-103

1 LEVEL 03
1/8" = 1'-0"

12/12/2025 2:43:19 PM C:\Users\EastonYaller\Documents\BIPP_P06_R24_CD_easton.TEC5R.rvt
© ANJALI GRANT DESIGN LLC ORIGINAL SHEET SIZE: 24" X 36"

KEYNOTES

	Keynote Text

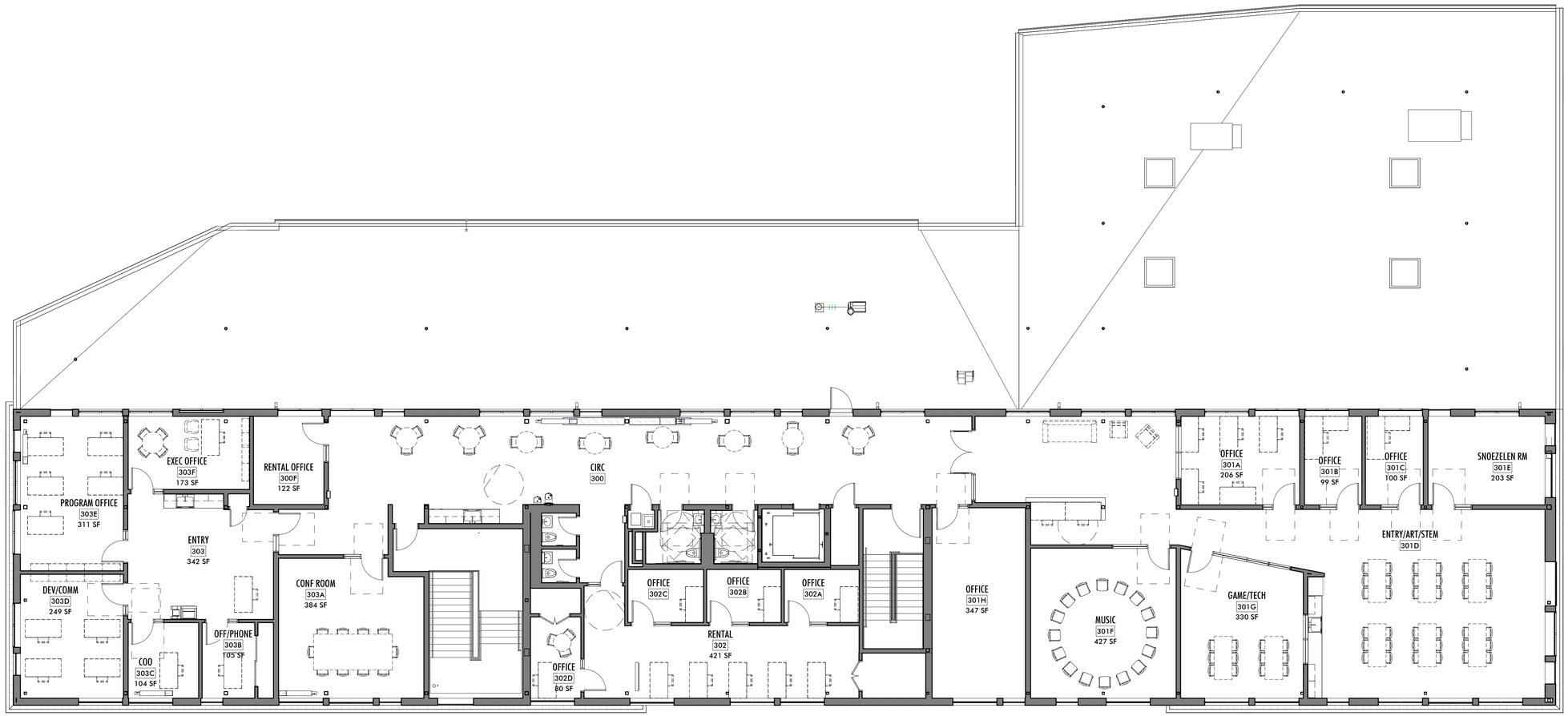

1 LEVEL 03 FURN PLAN
1/8" = 1'-0"

3427 BEACON AVE S
SEATTLE 98144
ANJALI@AGRANTDESIGN.COM
206-512-4209

anjali grant design LLC

3700 E MERCER WAY
BARNABIE POINT PROJECT

NO.	DATE	DESCRIPTION
		4 JUNE 2025 BUILDING PERMIT

PROJECT:

L03 FURN PLAN

A-103F

12/15/2025 1:53:19 PM C:\Users\EashaYadav\Documents\BPP_PSB_R24_CD_eashaTB50R.rvt
© ANJALI GRANT DESIGN LLC ORIGINAL SHEET SIZE: 24" X 36"

FINISH LEGEND

ACT	09 51 13 ACOUSTICAL CEILING TILE
BC	09 29 00 BULLNOSE CORNER
CG	CORNER GUARD
CONC-S	03 30 00 SEALED CONCRETE
CPT	09 68 13 CARPET TILE
CT	09 30 00 CERAMIC TILE
EPOXY	09 67 23 EPOXY COATING SYSTEM
FRL	06 83 00 FIBERGLASS REINFORCED LAMINATE
FRP	06 83 00 FIBERGLASS REINFORCED PANEL
GB, GWB	09 29 00 GYPSUM BOARD
HPL	06 41 16 HIGH-PRESSURE LAMINATE (CASEWORK SHALL BE HPL UNLESS NOTED AS WD)
LINO	09 65 43 LINOLEUM
PT	09 90 00 PAINT
RB	09 65 13 RUBBER BASE
RUBBER	09 65 19 RUBBER SHEET FLOORING
SC	SELF-COVE
RAF	09 65 66 RESILIENT ATHLETIC FLOORING
WD	06 41 13 WOOD (CLASS B FLAME SPREAD/SMOKE-DEVELOPED INDEX WHERE INDICATED)
WOM	12 48 13 WALK OFF MAT

CONC, SEALED
CPT-1
CPT-2
CPT-3
CT-1
CT-2
EPOXY
LINO-1
LINO-2
RAF
RUBBER
WOM

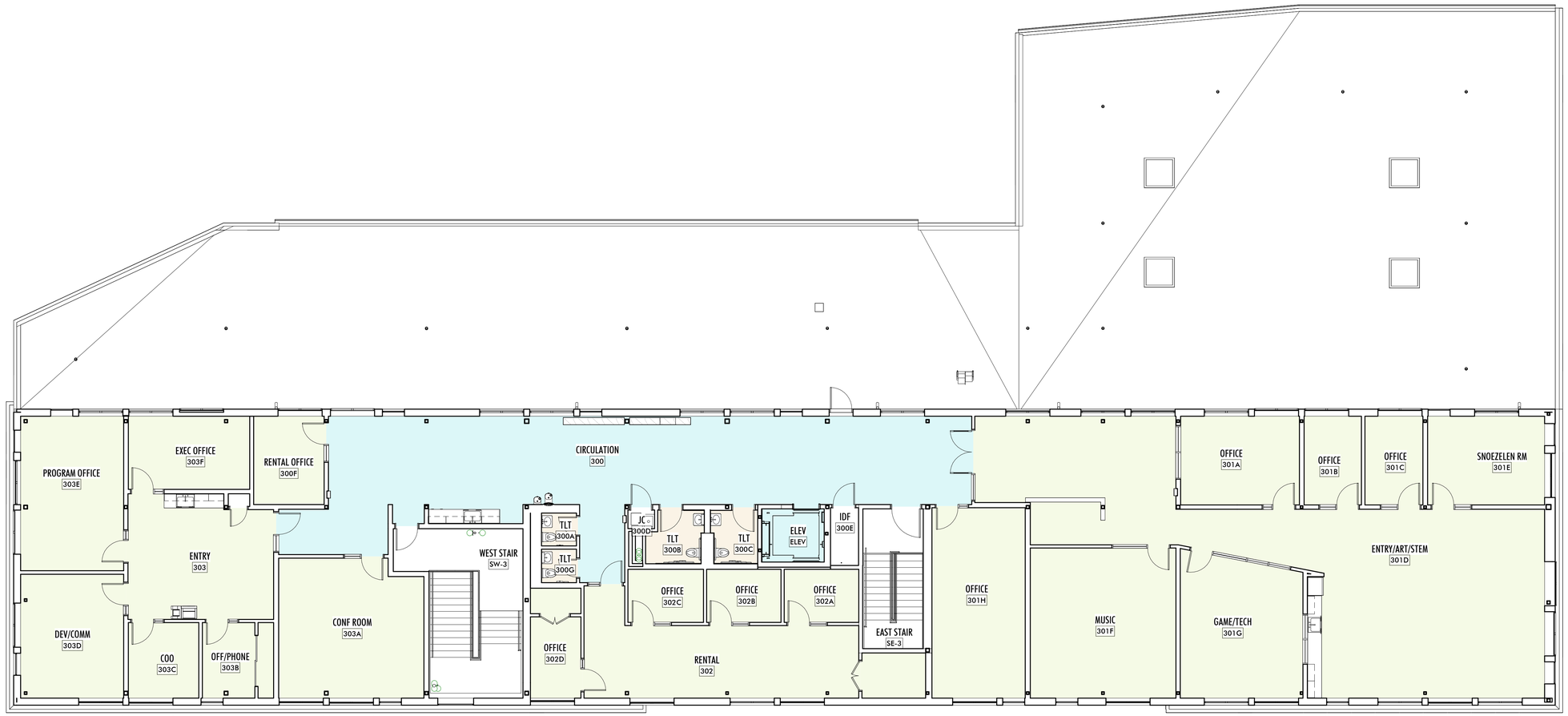

1 LEVEL 03
1/8" = 1'-0"

3427 BEACON AVE S
SEATTLE 98144
ANJALI@AGRANTDESIGN.COM
206-512-4209

anjali grant design LLC

3700 E MERCER WAY
BARNABIE POINT PROJECT

NO.	DATE	DESCRIPTION
	4 JUNE 2025	BUILDING PERMIT

PROJECT:

L03 FLOOR FINISH PLAN

A-103FF

12/12/2025 2:43:22 PM C:\Users\Eesha\Autodesk\Documents\BIP_R24_CD_eesha78508.rvt
© ANJALI GRANT DESIGN LLC ORIGINAL SHEET SIZE: 24" X 36"

FIRE ASSEMBLY LEGEND

2 HOUR RATED ASSEMBLY

1 HOUR RATED ASSEMBLY

KEYNOTES

	Keynote Text
5.5	ALTERNATING TREAD STAIR WITH PLATFORM
7.2	07 62 00 4" X 4" RECTANGULAR SHT MTL GUTTER
7.3	07 62 00 4" ROUND COATED SHT MTL DOWNSPOUT; TRANSITION TO 7" PTD GALV SCHEDULE 20 PIPE AT GRADE
7.4	07 62 00 6" X 6" RECTANGULAR SHT MTL GUTTER
7.5	07 72 99 ROOF ANCHORS
7.10	05 50 00 WALL ANCHORS
23.1	EQUIPMENT PER MECH DRAWINGS

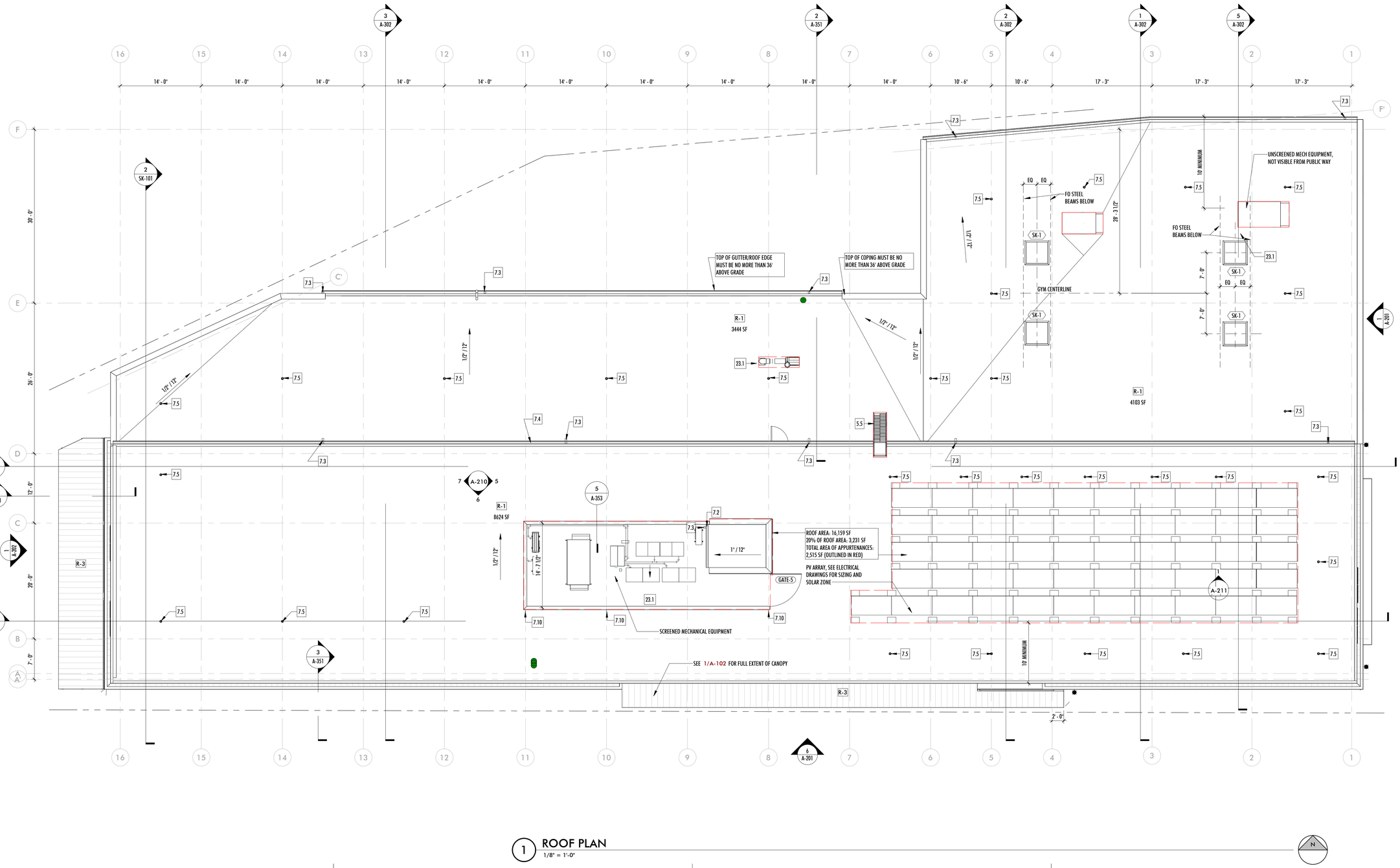

1 ROOF PLAN
1/8" = 1'-0"

anjali grant design LLC
3427 BEACON AVE S
SEATTLE 98144
ANJALI@AGRANTDESIGN.COM
206-512-4209

3700 E MERCER WAY
BARNABIE POINT PROJECT

NO.	DATE	DESCRIPTION
	4 JUNE 2025	BUILDING PERMIT

PROJECT:

ROOF PLAN

A-104

12/12/2025 2:43:27 PM C:\Users\Anjali\Desktop\Documents\BIP_PSR_R24_CD_wahla785581.rvt
© ANJALI GRANT DESIGN LLC ORIGINAL SHEET SIZE: 24" X 36"

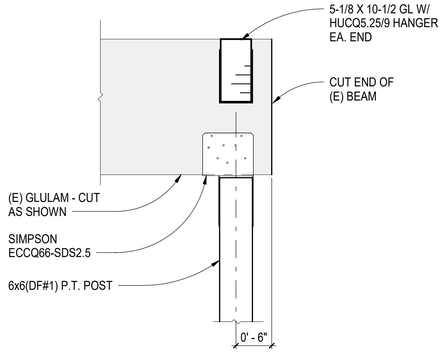

D4 CANOPY COLUMN TO BEAM
1" = 1'-0"

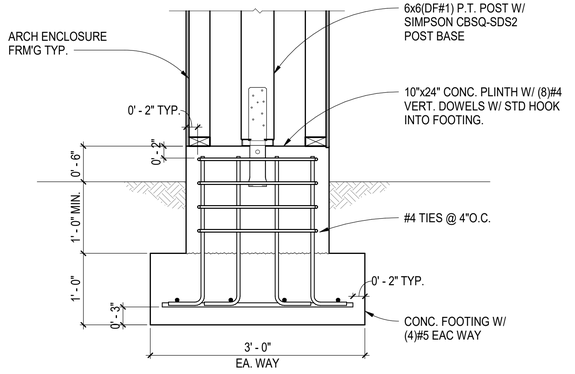

D3 CANOPY FOOTING
1" = 1'-0"

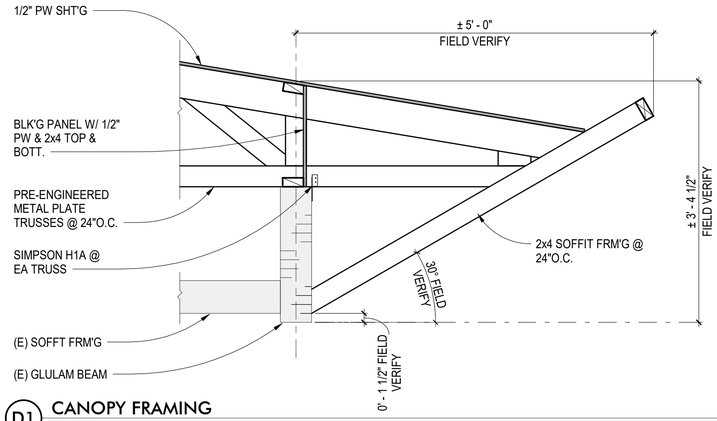

D1 CANOPY FRAMING
1" = 1'-0"

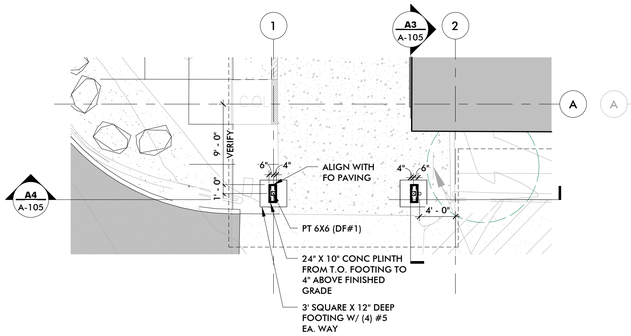

C4 UPPER CANOPY FLOOR PLAN/FDN PLAN
1/8" = 1'-0"

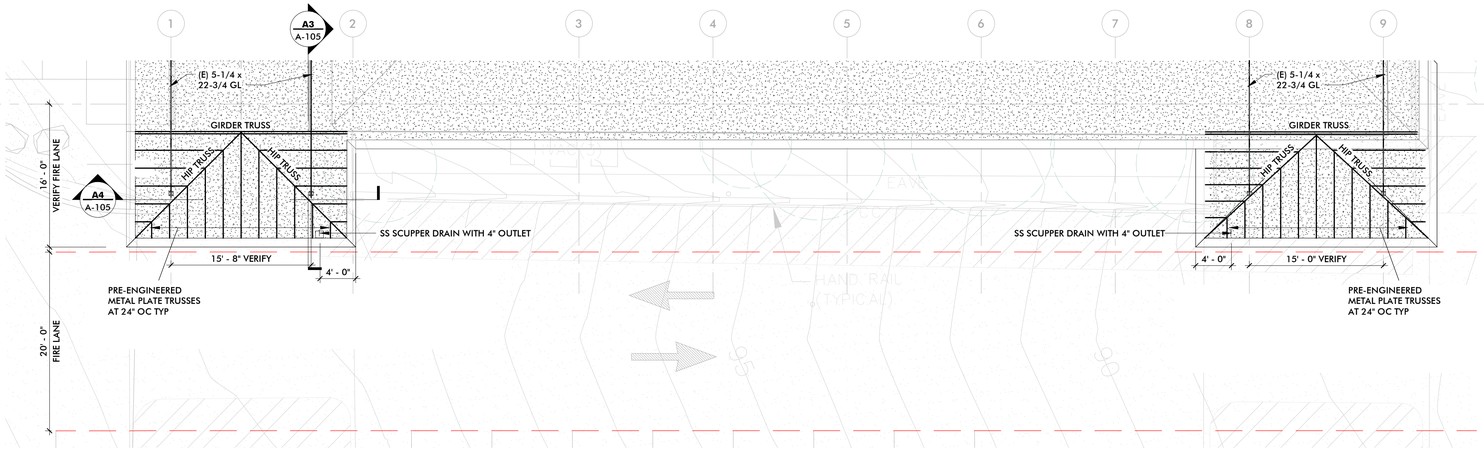

C3 CANOPY ROOF PLAN/ROOF FRAMING PLAN
1/8" = 1'-0"

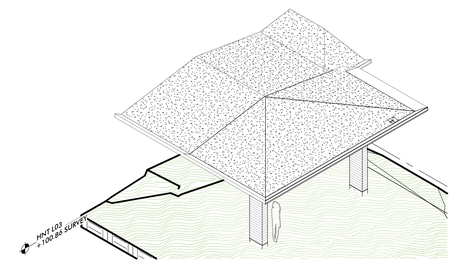

B4 CANOPY AXONOMETRIC

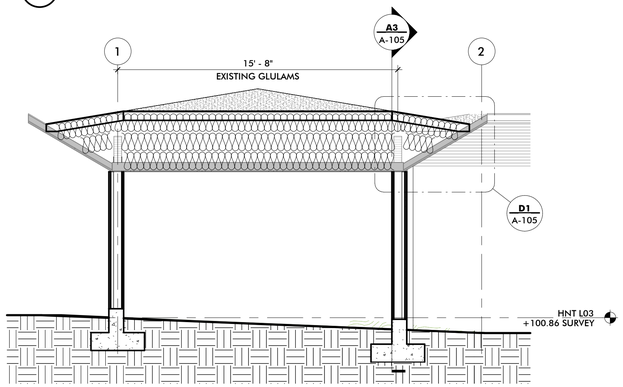

A4 E-W SECTION AT CANOPY
1/4" = 1'-0"

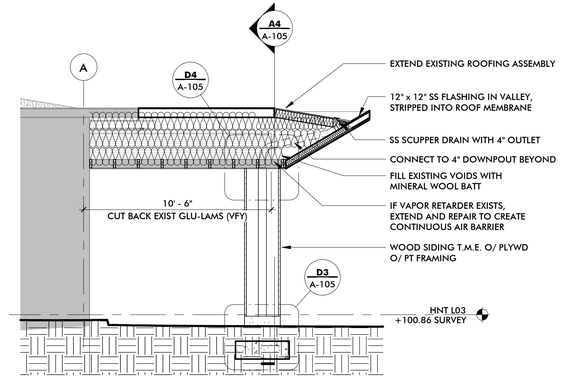

A3 N-S SECTION AT CANOPY
1/4" = 1'-0"

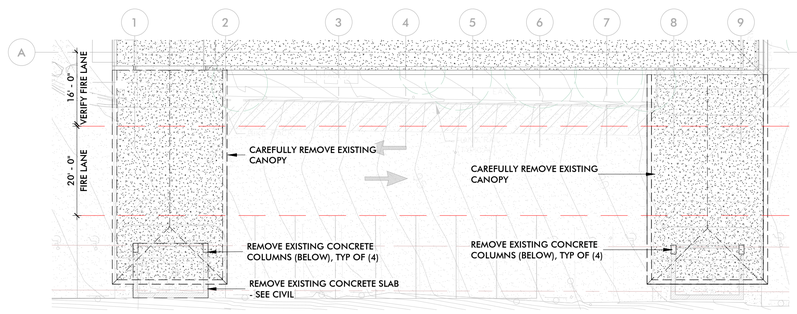

A1 EXISTING CANOPY DEMO PLAN
1/16" = 1'-0"

3427 BEACON AVE S
SEATTLE 98144
ANJALI@AGRANTDESIGN.COM
206-512-4209

anjali grant design LLC

9596 REGISTERED ARCHITECT
ANJALI GRANT
STATE OF WASHINGTON

3700 E MERCER WAY
BARNABIE POINT PROJECT

NO.	DATE	DESCRIPTION
1	1/6/2026	BLDG PERMIT CORRECTIONS

4 JUNE 2025
BUILDING PERMIT

PROJECT: XXXX

EXISTING CANOPY ALTERATIONS

A-105

© ANJALI GRANT DESIGN LLC

1/6/2026 11:50:24 AM D:\REVIT LOCAL\HNT_HNT_R24_anjaliatlhs.rvt
ORIGINAL SHEET SIZE: 24" X 36"

CEILING GENERAL NOTES

A. GWB SOFFIT DIMENSIONS ARE TO FACE OF FRAMING.
B. LIGHT FIXTURES AND ELECTRICAL EQUIPMENT SHOWN FOR LOCATION AND ORIENTATION ONLY.
C. MECHANICAL DUCTS, DIFFUSERS AND GRILLES SHOWN FOR LOCATION ONLY.
D. CENTER ALL LIGHTS, EQUIPMENT, SIGNS ETC, U.N.O.

FIRE ASSEMBLY LEGEND

2 HOUR RATED ASSEMBLY

1 HOUR RATED ASSEMBLY

CEILING LEGEND

EXIT SIGN

OPEN TO STRUCTURE; ACOUSTICAL METAL DECK

OPEN TO STRUCTURE

12 24 13 ROLLER SHADE

KEYNOTES

	Keynote Text

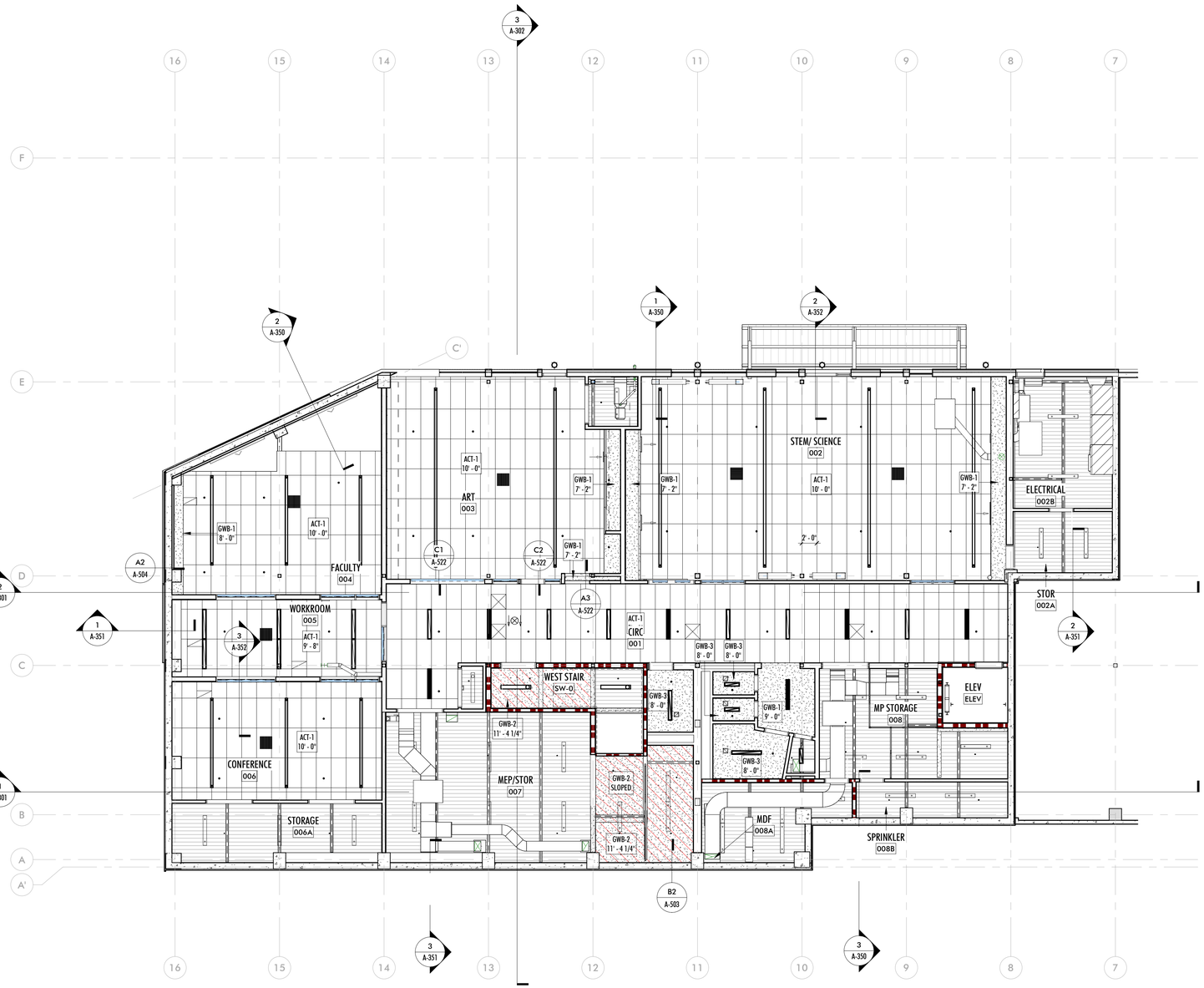

1 B01 RCP
1/8" = 1'-0"

anjali grant design LLC
3427 BEACON AVE S
SEATTLE 98144
ANJALI@AGRANTDESIGN.COM
206-512-4209

3700 E MERCER WAY
BARNABIE POINT PROJECT

NO.	DATE	DESCRIPTION
	4 JUNE 2025	BUILDING PERMIT

PROJECT:

B01 RCP

A-110

© ANJALI GRANT DESIGN LLC

12/12/2025 3:00:36 PM D:\REVIT LOCAL\BPP_PSB_R24_CD_anjalisettin.rvt
ORIGINAL SHEET SIZE: 24" X 36"

CEILING GENERAL NOTES

A. GWB SOFFIT DIMENSIONS ARE TO FACE OF FRAMING.
B. LIGHT FIXTURES AND ELECTRICAL EQUIPMENT SHOWN FOR LOCATION AND ORIENTATION ONLY.
C. MECHANICAL DUCTS, DIFFUSERS AND GRILLES SHOWN FOR LOCATION ONLY.
D. CENTER ALL LIGHTS, EQUIPMENT, SIGNS ETC, U.N.O.

FIRE ASSEMBLY LEGEND

2 HOUR RATED ASSEMBLY

1 HOUR RATED ASSEMBLY

CEILING LEGEND

EXIT SIGN

OPEN TO STRUCTURE; ACOUSTICAL METAL DECK

OPEN TO STRUCTURE

12 24 13 ROLLER SHADE

KEYNOTES

	Keynote Text
10.32	10 21 23 FABRIC CURTAIN

anjali grant design LLC
3427 BEACON AVE S
SEATTLE 98144
ANJALI@AGRANTDESIGN.COM
206-512-4209

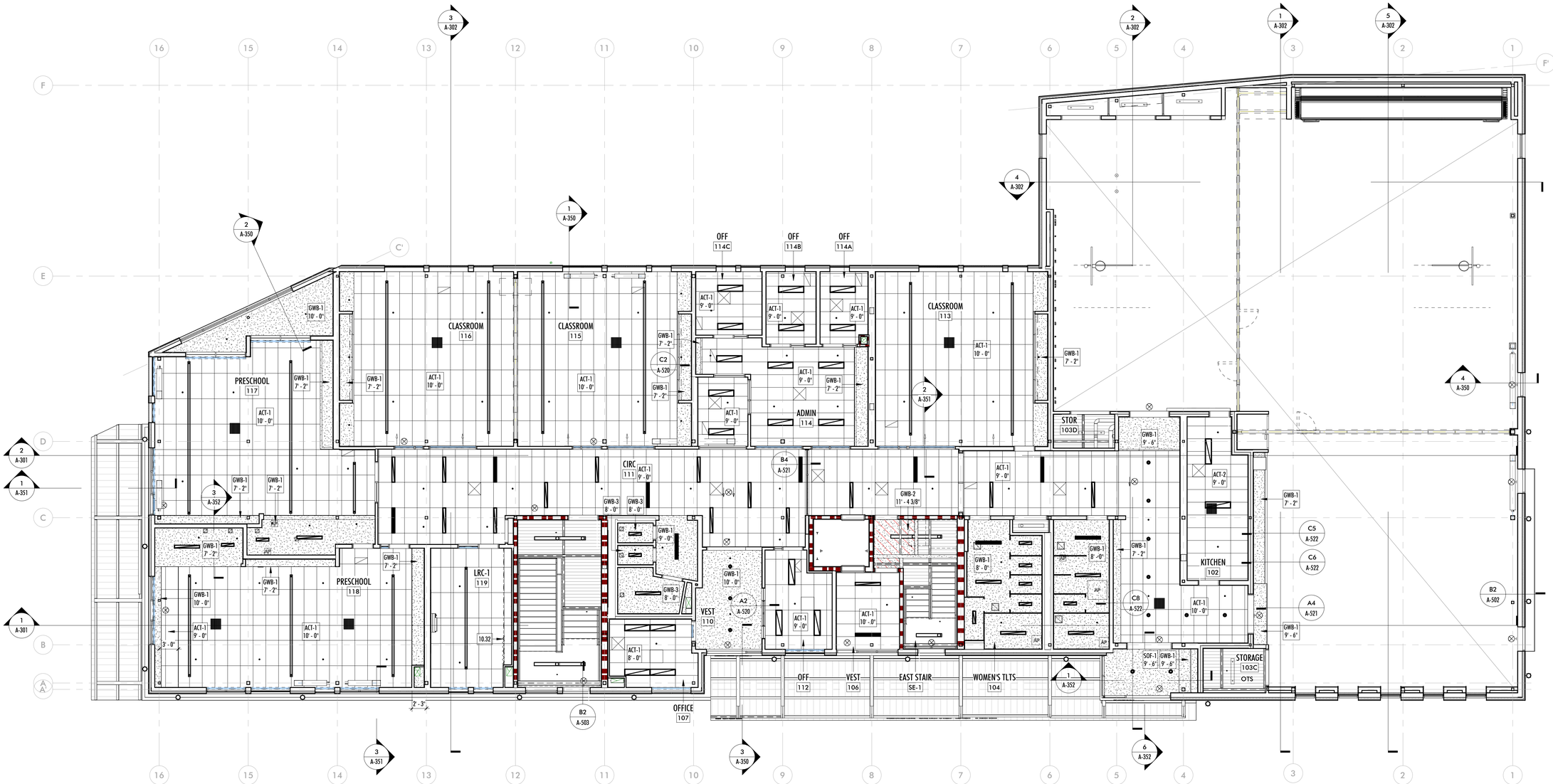

1 L01 RCP
1/8" = 1'-0"

3700 E MERCER WAY
BARNABIE POINT PROJECT

NO.	DATE	DESCRIPTION
	4 JUNE 2025	BUILDING PERMIT

PROJECT:

L01 RCP

A-111

12/12/2025 3:06:42 PM D:\REVIT LOCAL\BPP_PSB_R24_CD_anjaleattie.rvt
© ANJALI GRANT DESIGN LLC ORIGINAL SHEET SIZE: 24" X 36"

CEILING GENERAL NOTES

A. GWB SOFFIT DIMENSIONS ARE TO FACE OF FRAMING.
B. LIGHT FIXTURES AND ELECTRICAL EQUIPMENT SHOWN FOR LOCATION AND ORIENTATION ONLY.
C. MECHANICAL DUCTS, DIFFUSERS AND GRILLES SHOWN FOR LOCATION ONLY.
D. CENTER ALL LIGHTS, EQUIPMENT, SIGNS ETC, U.N.O.

FIRE ASSEMBLY LEGEND

- 2 HOUR RATED ASSEMBLY
- 1 HOUR RATED ASSEMBLY

CEILING LEGEND

- EXIT SIGN
- OPEN TO STRUCTURE; ACOUSTICAL METAL DECK
- OPEN TO STRUCTURE
- 12 24 13 ROLLER SHADE

KEYNOTES

	Keynote Text
1.0	LOCATE ALL MEP & FIRE PROTECTION PIPING, DUCTS, WIRING AND EQUIPMENT ABOVE BOTTOM FLANGE OF WIDE-FLANGE BEAMS, TYP THIS ROOM
9.9	09 54 26 TRIM WOOD SLAT CEILING AROUND STRUCTURE, LEAVING 1" CLEARANCE ALL AROUND & ALIGNING OPENINGS
9.11	NO PENETRATIONS THROUGH GWB-2 PERMITTED; COORD WEIGHT RATING OF SPRINGS TO INCLUDE ALL SUSPENDED ASSEMBLIES, EQUIPMENT, FIXTURES AND DUCTWORK; FILL CAVITY WITH BATT IF REQUIRED FOR FIRE PROTECTION, LEAVING ADEQUATE SPACE AROUND HANGERS FOR SPRINGS TO MOVE FREELY
10.18	10 22 39 FOLDING PANEL PARTITION, 18' TALL
10.32	10 21 23 FABRIC CURTAIN
11.19	BASKETBALL HOOP
11.21	CLIMBING ROPES
26.6	PENDANT-MOUNTED SPEAKERS BY OWNER
26.7	CEILING-MOUNTED SPEAKERS BY OWNER

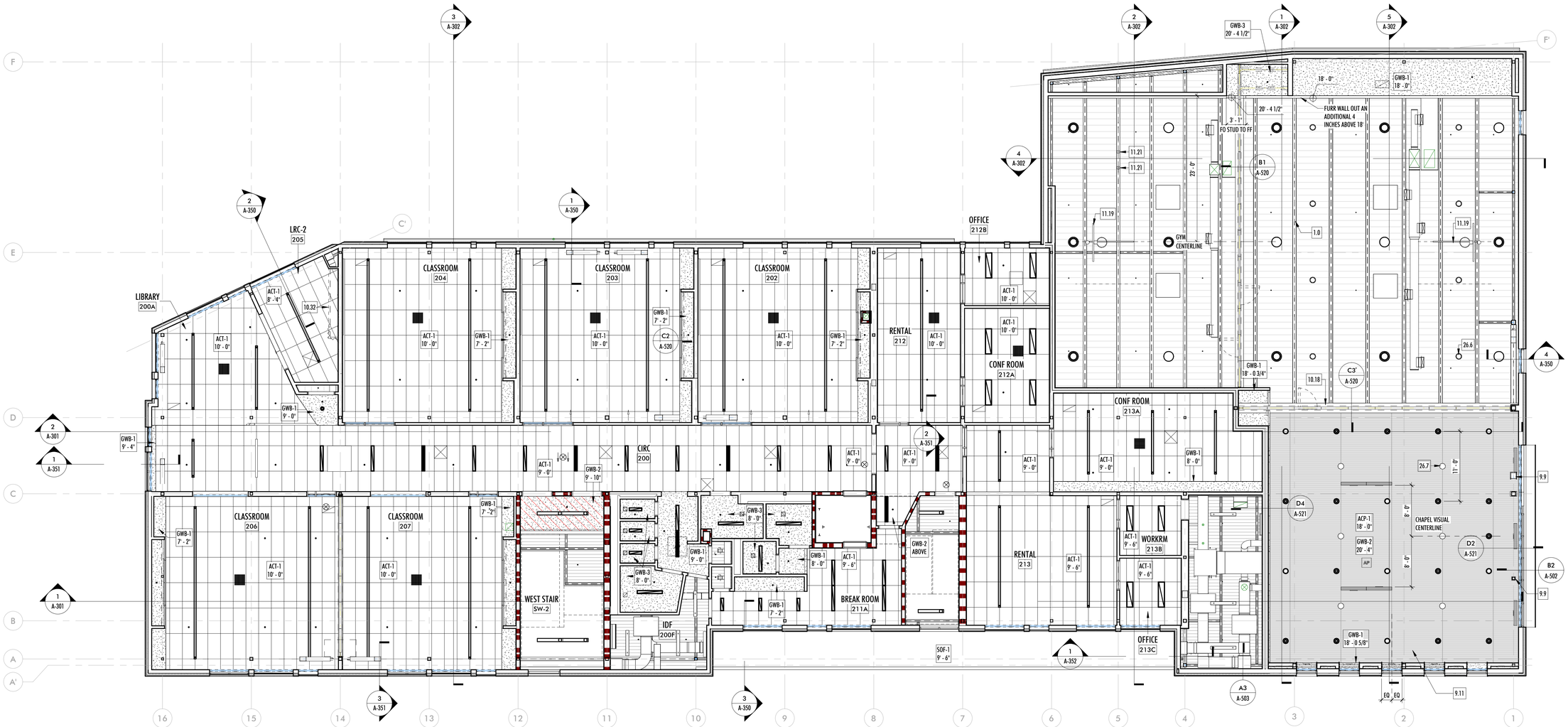
LIBRARY 200A
LRC-2 205
CLASSROOM 204
CLASSROOM 203
CLASSROOM 202
OFFICE 212B
RENTAL 212
CONF ROOM 212A
GYM CENTERLINE
CONF ROOM 213A
CLASSROOM 206
CLASSROOM 207
CIRC 200
WEST STAIR SW-2
IDF 200F
BREAK ROOM 211A
RENTAL 213
WORKRM 213B
OFFICE 213C
CHAPEL VISUAL CENTERLINE
FURR WALL OUT AN ADDITIONAL 4 INCHES ABOVE 18'
3' - 1" FO STUD TO FF
20' - 4 1/2"
23' - 0"
18' - 0"
GWB-1 18' - 0"
GWB-3 20' - 4 1/2"
GWB-1 18' - 0 3/4"
GWB-1 18' - 0 5/8"
ACP-1 18' - 0"
GWB-2 20' - 4"
GWB-2 ABOVE
SOF-1 9' - 6"
ACT-1 8' -4"
ACT-1 10' - 0"
ACT-1 9' - 6"
ACT-1 9' - 0"
GWB-1 7' - 2"
GWB-1 8' - 0"
GWB-1 9' - 0"
GWB-1 9' - 4"
GWB-1 7' - 2"
GWB-2 9' - 10"
GWB-3 8' - 0"
GWB-1 8' - 0"
GWB-1 9' - 0"
GWB-1 8' - 0"
GWB-1 7' - 2"
GWB-1 8' - 0"
GWB-1 9' - 0"
GWB-1 8' - 0"
GWB-1 7' - 2"
GWB-1 8' - 0"
GWB-1 7' - 2"
GWB-1 8' - 0"
GWB-1 7' - 2

CEILING GENERAL NOTES

A. GWB SOFFIT DIMENSIONS ARE TO FACE OF FRAMING.
B. LIGHT FIXTURES AND ELECTRICAL EQUIPMENT SHOWN FOR LOCATION AND ORIENTATION ONLY.
C. MECHANICAL DUCTS, DIFFUSERS AND GRILLES SHOWN FOR LOCATION ONLY.
D. CENTER ALL LIGHTS, EQUIPMENT, SIGNS ETC, U.N.O.

FIRE ASSEMBLY LEGEND

2 HOUR RATED ASSEMBLY

1 HOUR RATED ASSEMBLY

CEILING LEGEND

EXIT SIGN

OPEN TO STRUCTURE; ACOUSTICAL METAL DECK

OPEN TO STRUCTURE

12 24 13 ROLLER SHADE

KEYNOTES

Keynote Text

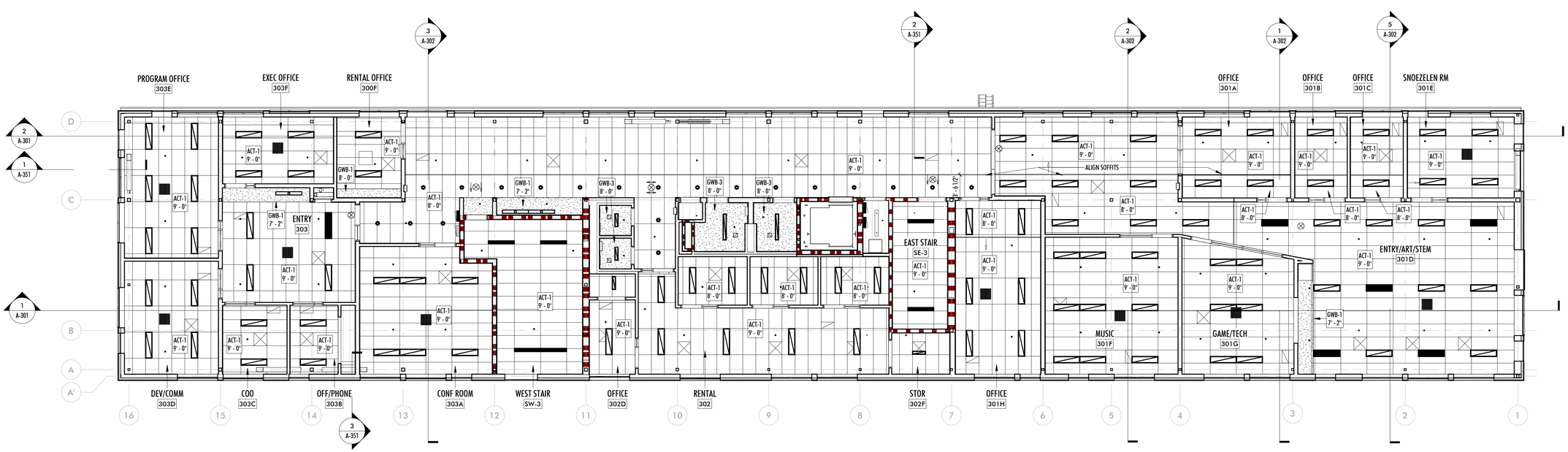

1 L03 RCP
1/8" = 1'-0"

3427 BEACON AVE S
SEATTLE 98144
ANJALI@AGRANTDESIGN.COM
206-512-4209

anjali grant design LLC

3700 E MERCER WAY
BARNABIE POINT PROJECT

NO.	DATE	DESCRIPTION
	4 JUNE 2025	BUILDING PERMIT

PROJECT:

L03 RCP

A-113

12/12/2025 3:06:51 PM D:\REVIT LOCAL\BPP_PSB_RQA_CD_anjaneslin.rvt
© ANJALI GRANT DESIGN LLC ORIGINAL SHEET SIZE: 24" X 36"

KEYNOTES

	Keynote Text
7.9	07 42 13/07 62 00 FLUSH MTL-1A SIDING OVER OPENINGS AS SHOWN; EXTEND JAMB FLASHINGS TO UNDERSIDE OF SOFFIT
7.11	07 46 46 COMPRESSION JOINT
10.7	10 14 00 ALUMINUM LETTERS WITH POWDERCOAT FINISH; BUILDING-MTD ON 1/2" STANDOFFS; CANOPY-MTD W/ CONCEALED BRACKETS TO FACE OF STEEL PURLINS; ISOLATE METALS WITH NEOPRENE WASHERS
10.24	10 44 00 KNOX BOX 4300 VAULT FLUSH MOUNT AT 60" AFF PER IFC 506 AND CITY OF MI REQUIREMENTS. PROVIDE 2 SETS OF KEYS.
26.5	SOLAR PANELS PER ELECTRICAL DRAWINGS

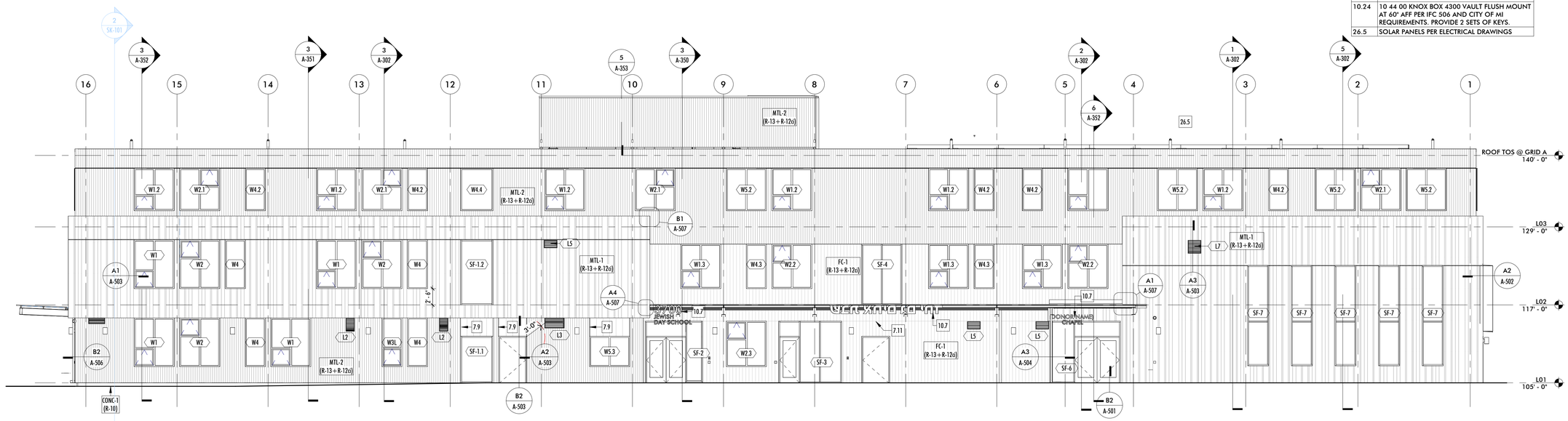

6 SOUTH ELEVATION
1/8" = 1'-0"

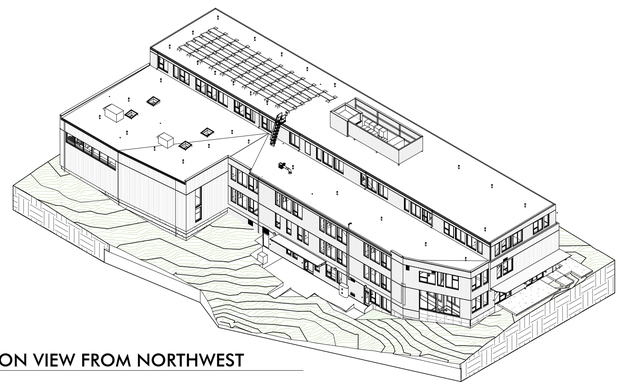

5 AXON VIEW FROM NORTHWEST

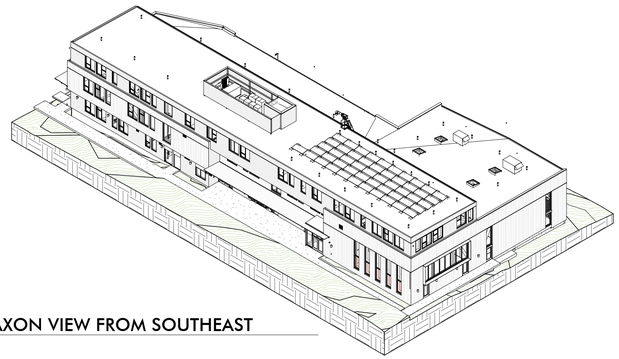

4 AXON VIEW FROM SOUTHEAST

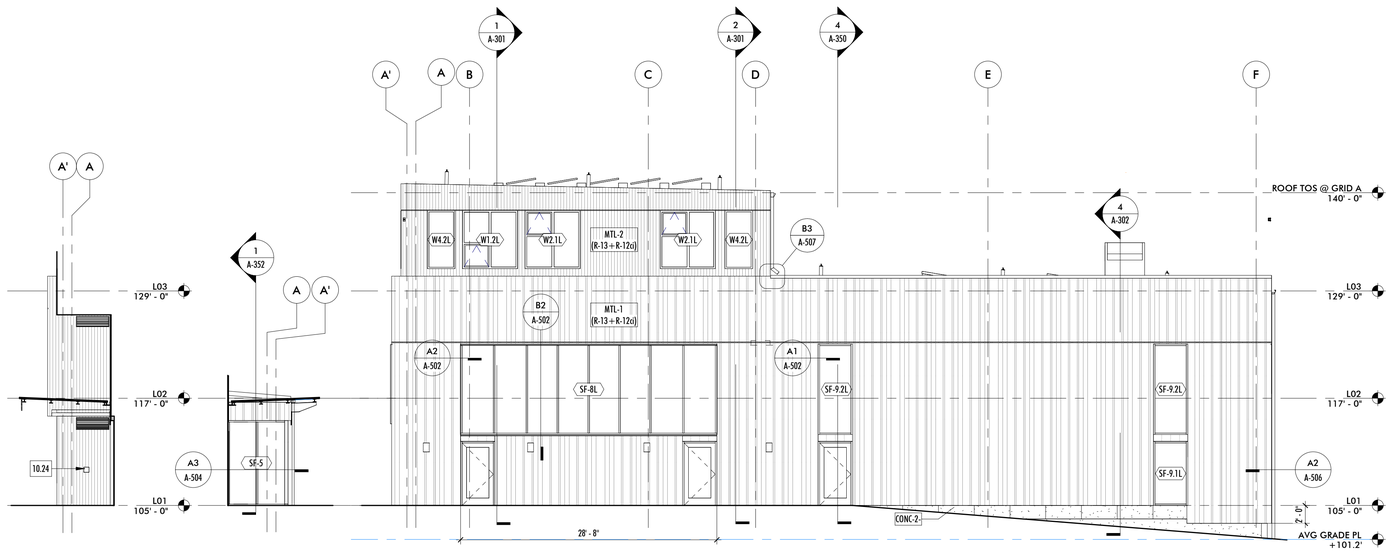

3 ENTRY WEST
1/8" = 1'-0"

2 ENTRY EAST
1/8" = 1'-0"

1 EAST ELEVATION
1/8" = 1'-0"

anjali grant design LLC
3427 BEACON AVE S
SEATTLE 98144
ANJALI@AGRANTDESIGN.COM
206-512-4209

3700 E MERCER WAY
BARNABIE POINT PROJECT

NO.	DATE	DESCRIPTION
		4 JUNE 2025 BUILDING PERMIT

PROJECT:

EXTERIOR ELEVATIONS

A-201

10/12/2025 5:01:19 PM C:\Users\EastonY\adsk\Documents\BIPP_R58_R24_v23_easton78508.rvt
© ANJALI GRANT DESIGN LLC ORIGINAL SHEET SIZE: 24" X 36"

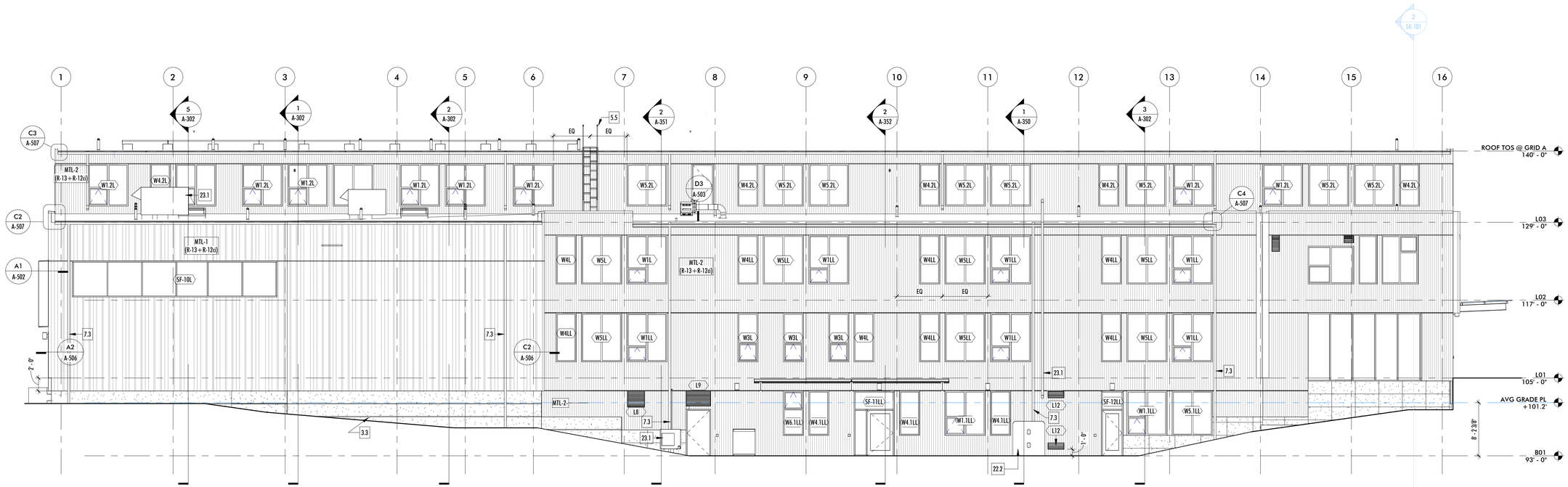

3 NORTH ELEVATION
1/8" = 1'-0"

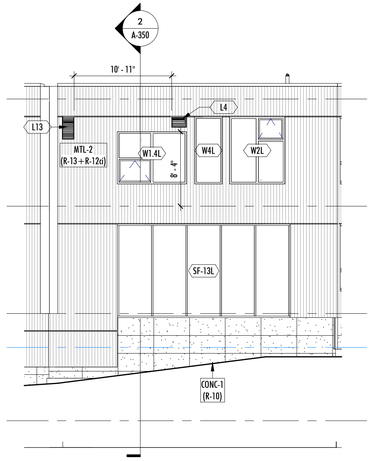

2 NORTHWEST ELEVATION
1/8" = 1'-0"

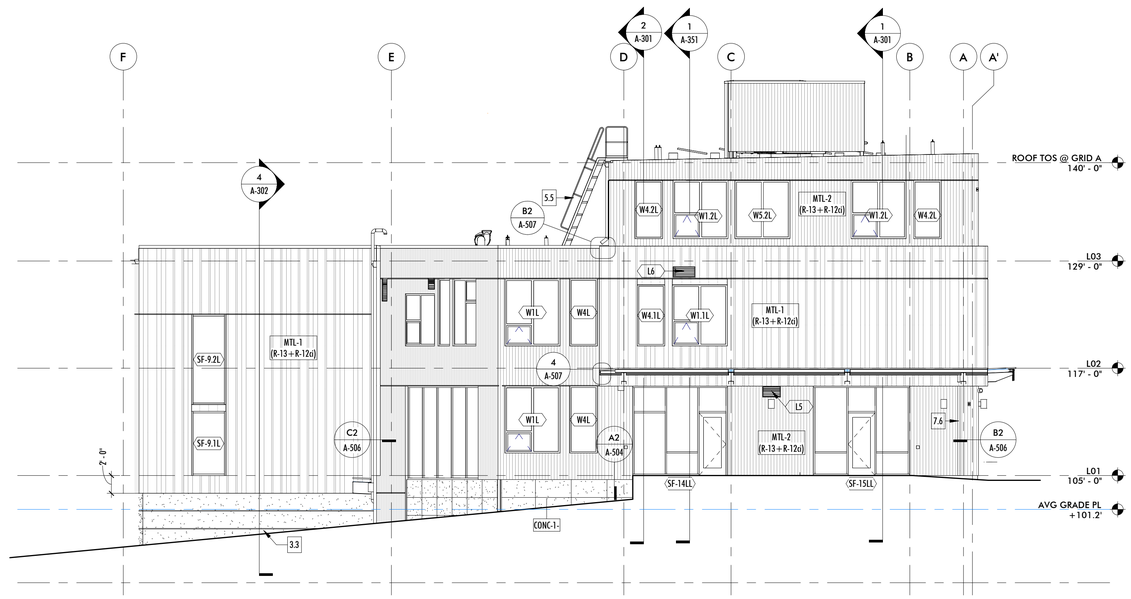

1 WEST ELEVATION
1/8" = 1'-0"

KEYNOTES

	Keynote Text
3.3	03 30 00 HORIZONTAL V-REVEAL
5.5	ALTERNATING TREAD STAIR WITH PLATFORM
7.3	07 62 00 4" ROUND COATED SHT MTL DOWNSPOUT; TRANSITION TO 7" PTD GALV SCHEDULE 20 PIPE AT GRADE
7.6	07 62 00 3" ROUND COATED SHT MTL DOWNSPOUT; TRANSITION TO 7" PTD GALV SCHEDULE 20 PIPE AT GRADE
22.2	BUSHMAN 265 RAINWATER TANK WITH FIRST FLUSH DIVERTER; CONNECT OVERFLOW TO STORM SYSTEM
23.1	EQUIPMENT PER MECH DRAWINGS

anjali grant design LLC
3427 BEACON AVE S
SEATTLE 98144
ANJALI@AGRANTDESIGN.COM
206-512-4209

3700 E MERCER WAY
BARNABIE POINT PROJECT

NO.	DATE	DESCRIPTION

4 JUNE 2025
BUILDING PERMIT

PROJECT:

EXTERIOR ELEVATIONS

A-202

10/15/2025 1:31:44 PM C:\Users\Evelina\Yadav\Documents\BIP9_R24_CD_evelinaTT8558.rvt
© ANJALI GRANT DESIGN LLC ORIGINAL SHEET SIZE: 24" X 36"

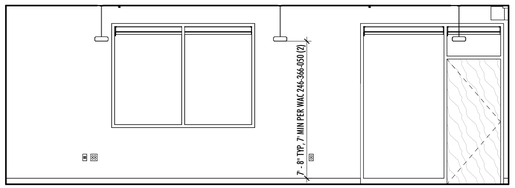

17 CONFERENCE 006 NORTH
1/4" = 1'-0"

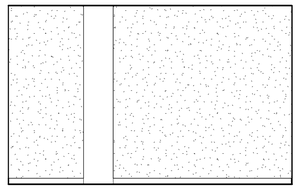

16 CONFERENCE 006 WEST
1/4" = 1'-0"

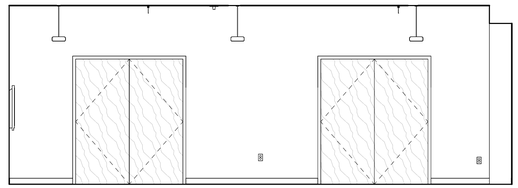

15 CONFERENCE 006 SOUTH
1/4" = 1'-0"

WALL FINISH LEGEND

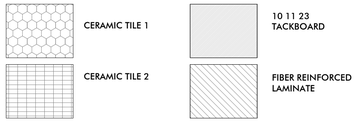

KEYNOTES

	Keynote Text
6.1	(6) ADJUSTABLE SHELVES AND STANDARDS, 7' TALL, 18" DEEP
6.14	5-1/2" APRON (27" KNEE SPACE)
10.2	
10.21	10 44 00 SEMI-RECESSED FIRE EXTINGUISHER CABINET
10.33	10 28 00 SURFACE-MTD PT DISPENSER
10.34	10 29 00 SURFACE-MTD SOAP DISPENSER
11.5	FOIC DISHWASHER
11.7	FOIC REFRIGERATOR
11.9	FOIC MICROWAVE
11.14	FOIC FREEZER
11.16	FOIO COPY MACHINE
12.10	FOIO TV

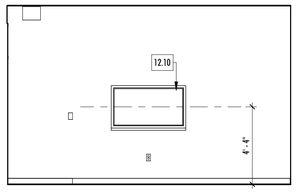

14 CONFERENCE 006 EAST
1/4" = 1'-0"

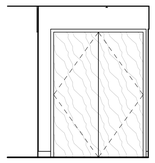

13 001A EAST
1/4" = 1'-0"

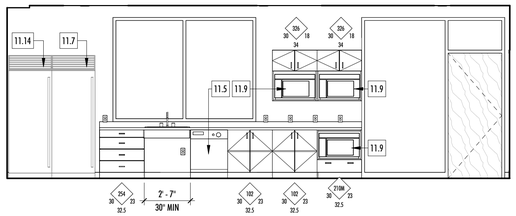

12 WORKROOM 005 NORTH
1/4" = 1'-0"

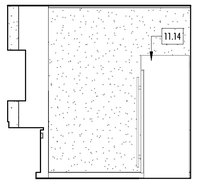

11 WORKROOM 005 WEST
1/4" = 1'-0"

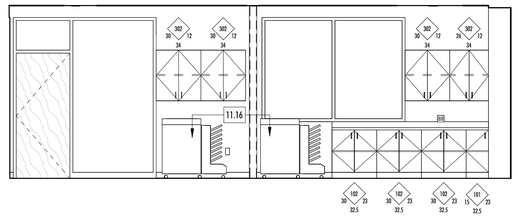

10 WORKROOM 005 SOUTH
1/4" = 1'-0"

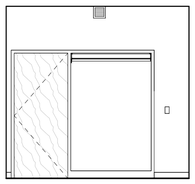

9 WORKROOM 005 EAST
1/4" = 1'-0"

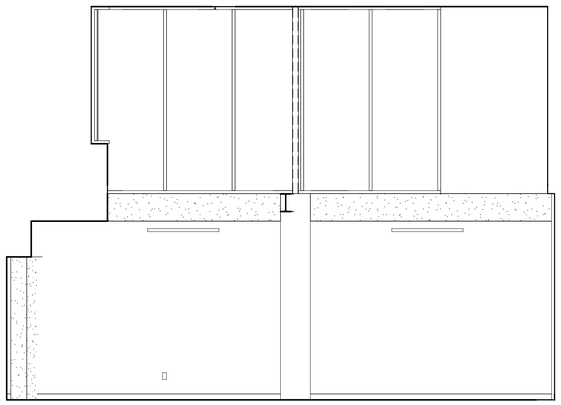

8 FACULTY 004 NORTH
1/4" = 1'-0"

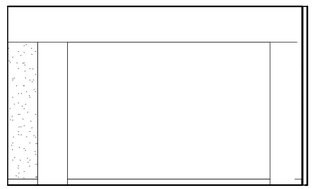

7 FACULTY 004 WEST
1/4" = 1'-0"

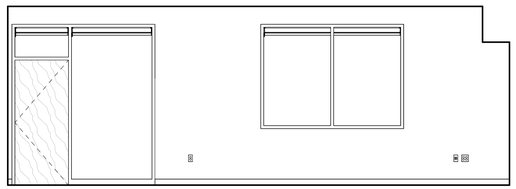

6 FACULTY 004 SOUTH
1/4" = 1'-0"

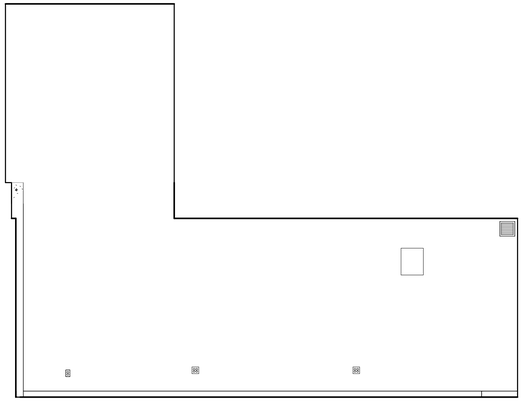

5 FACULTY 004 EAST
1/4" = 1'-0"

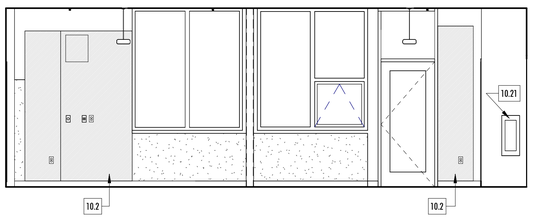

4 ART ROOM 003 NORTH
1/4" = 1'-0"

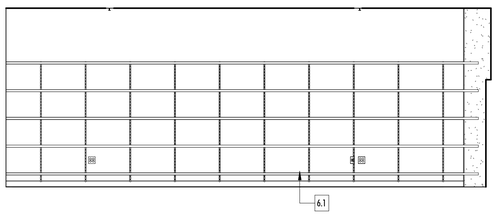

3 ART ROOM 003 WEST
1/4" = 1'-0"

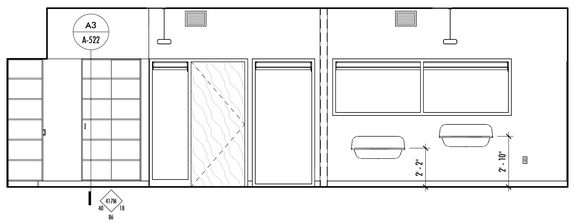

2 ART ROOM 003 SOUTH
1/4" = 1'-0"

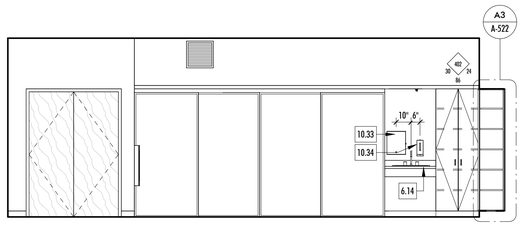

1 ART ROOM 003 EAST
1/4" = 1'-0"

3427 BEACON AVE S
SEATTLE 98144
ANJALI@AGRANTDESIGN.COM
206-512-4209

anjali grant design LLC

3700 E MERCER WAY
BARNABIE POINT PROJECT

NO.	DATE	DESCRIPTION

4 JUNE 2025
BUILDING PERMIT

PROJECT:

INTERIOR ELEVATIONS B01

A-203

12/12/2025 5:01:32 PM C:\Users\EashaYadav\Documents\BPP_PS8_R24_CD_eashaTI05SR.rvt
© ANJALI GRANT DESIGN LLC ORIGINAL SHEET SIZE: 24" X 36"

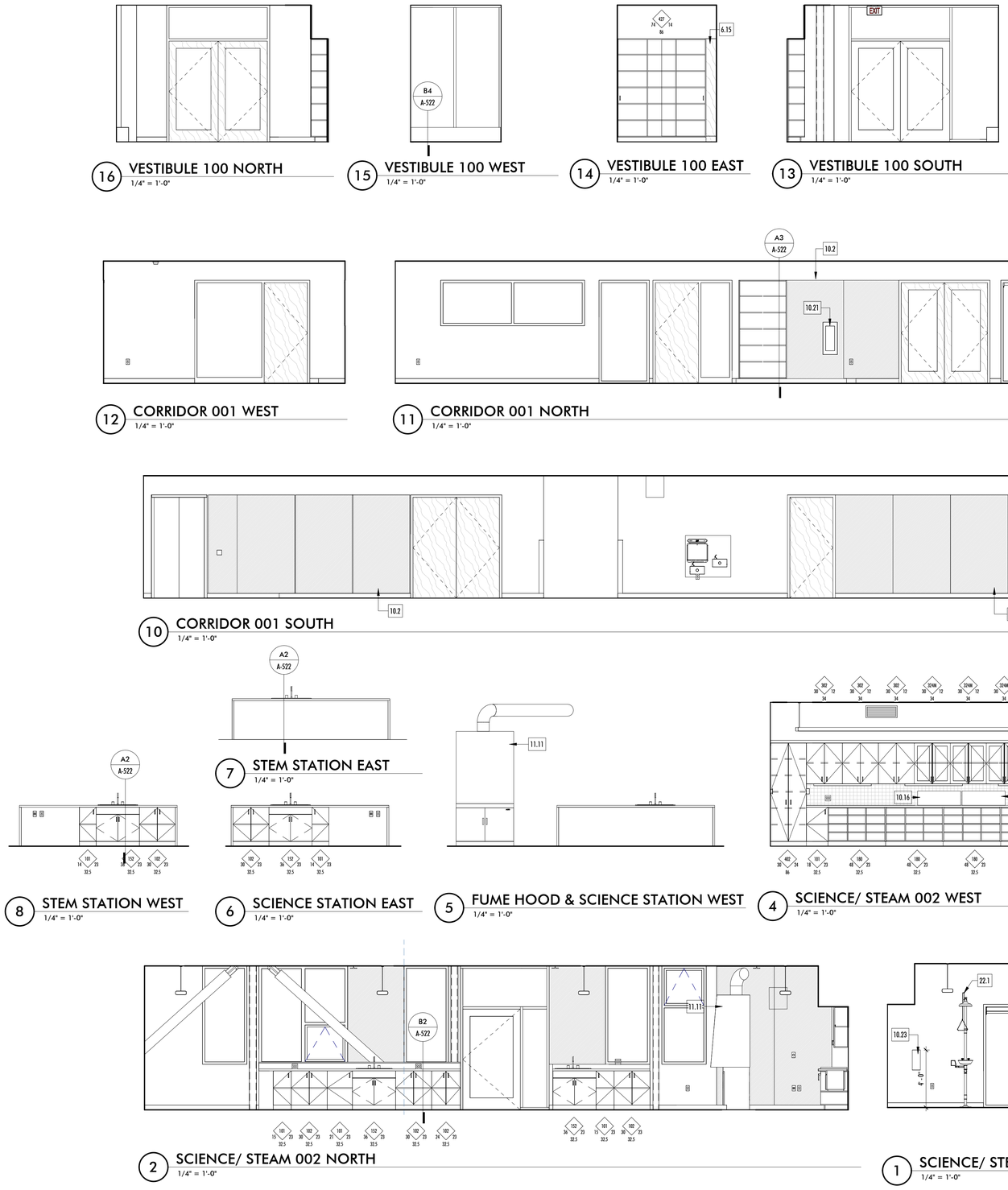

16 VESTIBULE 100 NORTH
1/4" = 1'-0"

15 VESTIBULE 100 WEST
1/4" = 1'-0"

14 VESTIBULE 100 EAST
1/4" = 1'-0"

13 VESTIBULE 100 SOUTH
1/4" = 1'-0"

12 CORRIDOR 001 WEST
1/4" = 1'-0"

11 CORRIDOR 001 NORTH
1/4" = 1'-0"

10 CORRIDOR 001 SOUTH
1/4" = 1'-0"

9 CORRIDOR 001 EAST
1/4" = 1'-0"

7 STEM STATION EAST
1/4" = 1'-0"

8 STEM STATION WEST
1/4" = 1'-0"

6 SCIENCE STATION EAST
1/4" = 1'-0"

5 FUME HOOD & SCIENCE STATION WEST
1/4" = 1'-0"

4 SCIENCE/ STEAM 002 WEST
1/4" = 1'-0"

3 SCIENCE/ STEAM 002 EAST
1/4" = 1'-0"

2 SCIENCE/ STEAM 002 NORTH
1/4" = 1'-0"

1 SCIENCE/ STEAM 002 SOUTH
1/4" = 1'-0"

WALL FINISH LEGEND

- CERAMIC TILE 1
- CERAMIC TILE 2
- 10 11 23 TACKBOARD
- FIBER REINFORCED LAMINATE

KEYNOTES

	Keynote Text
6.14	5-1/2" APRON (27" KNEE SPACE)
6.15	CASEWORK FILLER PANEL
10.2	
10.15	FOIO 3D PRINTER
10.16	FOIO LASER CUTTER
10.21	10 44 00 SEMI-RECESSED FIRE EXTINGUISHER CABINET
10.23	10 44 00 SURFACE-MOUNTED FIRE EXTINGUISHER
11.5	FOIC DISHWASHER
11.8	FOIC UNDERCOUNTER REFRIGERATOR
11.9	FOIC MICROWAVE
11.11	FUME HOOD WITH VENTED STORAGE
12.11	FOIO FLAMMABLE CABINET
22.1	EYEWASH STATION, SEE PLUMBING DRAWINGS

3427 BEACON AVE S
SEATTLE 98144
ANJALI@AGRANTDESIGN.COM
206-512-4209

anjali grant design LLC

3700 E MERCER WAY
BARNABIE POINT PROJECT

NO.	DATE	DESCRIPTION
	4 JUNE 2025	BUILDING PERMIT

PROJECT:

INTERIOR ELEVATIONS LEVEL B01/ L01

A-204

12/12/2025 5:01:40 PM C:\Users\EashaYadav\Documents\BPP_PS8_R24_CD_eashaTB55R.rvt
© ANJALI GRANT DESIGN LLC ORIGINAL SHEET SIZE: 24" X 36"

WALL FINISH LEGEND

- CERAMIC TILE 1
- CERAMIC TILE 2
- 10 11 23 TACKBOARD
- FIBER REINFORCED LAMINATE

KEYNOTES

	Keynote Text
6.14	5-1/2" APRON (27" KNEE SPACE)
6.16	24" COUNTER WITH 22" HIGH BACKSPLASH
6.28	ADJUSTABLE SHELVES AND STANDARDS, 14" DEEP
10.10	10 43 13 SEMI-RECESSED DEFIBRILLATOR CABINET
10.12	DISPLAY RAIL
10.21	10 44 00 SEMI-RECESSED FIRE EXTINGUISHER CABINET
10.33	10 28 00 SURFACE-MTD PT DISPENSER
10.34	10 29 00 SURFACE-MTD SOAP DISPENSER

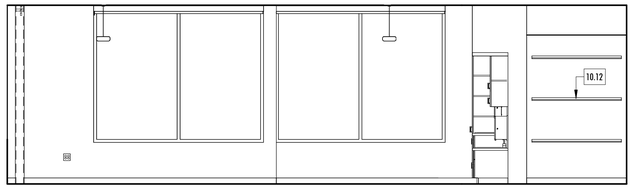

20 PRESCHOOL 117 NORTH
1/4" = 1'-0"

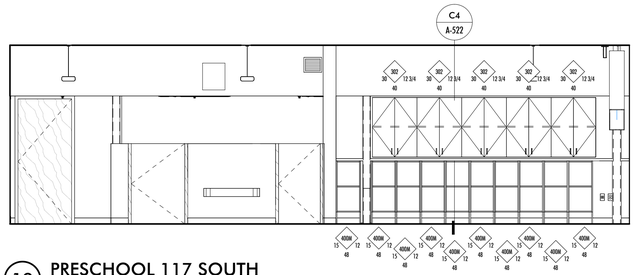

19 PRESCHOOL 117 SOUTH
1/4" = 1'-0"

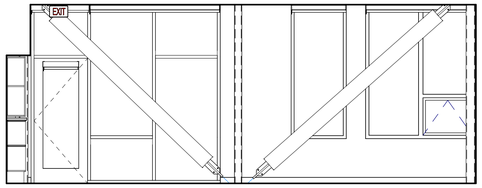

18 PRESCHOOL 117 WEST
1/4" = 1'-0"

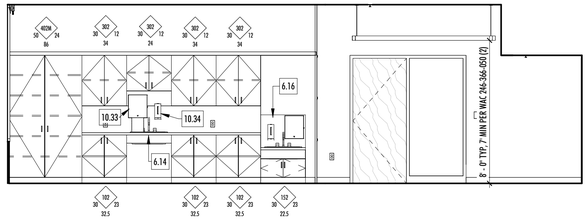

17 PRESCHOOL 117 EAST
1/4" = 1'-0"

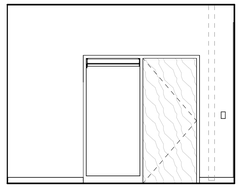

16 LRC 119 NORTH
1/4" = 1'-0"

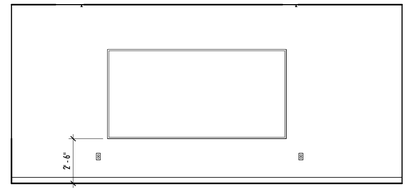

15 LRC 119 WEST
1/4" = 1'-0"

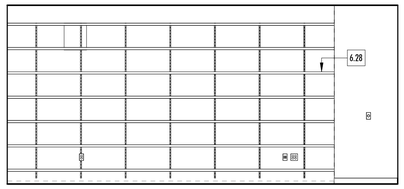

14 LRC 119 EAST
1/4" = 1'-0"

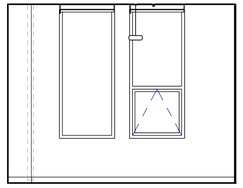

13 LRC 119 SOUTH
1/4" = 1'-0"

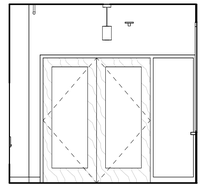

12 VESTIBULE 110 NORTH
1/4" = 1'-0"

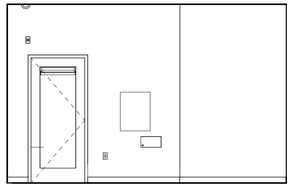

11 VESTIBULE 110 WEST
1/4" = 1'-0"

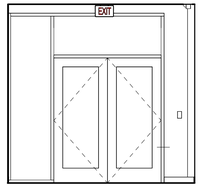

10 VESTIBULE 110 SOUTH
1/4" = 1'-0"

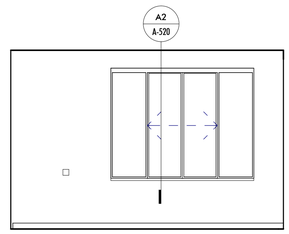

9 VESTIBULE 110 EAST
1/4" = 1'-0"

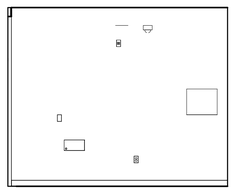

8 VESTIBULE 106 W
1/4" = 1'-0"

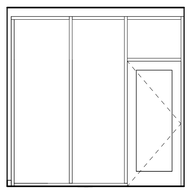

7 VESTIBULE 106 S
1/4" = 1'-0"

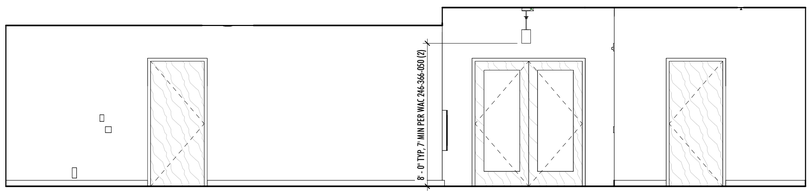

6 LOBBY 101 NORTH
1/4" = 1'-0"

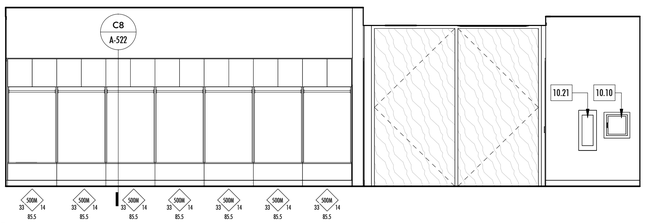

5 LOBBY 101 WEST
1/4" = 1'-0"



4 VESTIBULE 106 E
1/4" = 1'-0"

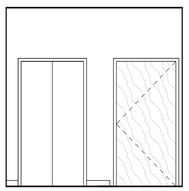

3 VESTIBULE 106 N
1/4" = 1'-0"

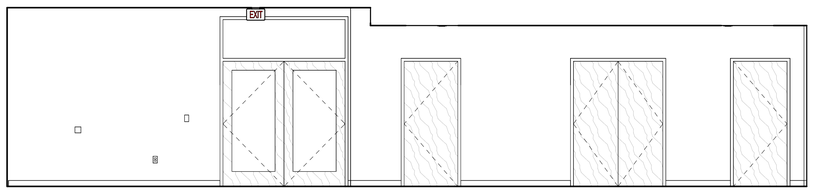

2 LOBBY 101 SOUTH
1/4" = 1'-0"

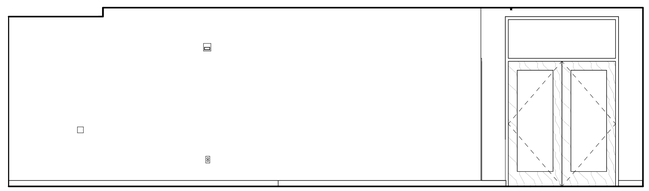

1 LOBBY 101 EAST
1/4" = 1'-0"

3427 BEACON AVE S
SEATTLE 98144
ANJALI@AGRANTDESIGN.COM
206-512-4209

anjali grant design LLC

3700 E MERCER WAY
BARNABIE POINT PROJECT

NO.	DATE	DESCRIPTION
	4 JUNE 2025	BUILDING PERMIT

PROJECT:

INTERIOR ELEVATIONS L01

A-205

12/12/2025 5:01:51 PM C:\Users\Eamin\Desktop\Documents\BIP_P24_R24_CD_eamin785561.rvt
© ANJALI GRANT DESIGN LLC ORIGINAL SHEET SIZE: 24" X 36"

WALL FINISH LEGEND

- CERAMIC TILE 1
- CERAMIC TILE 2
- 10 11 23 TACKBOARD
- FIBER REINFORCED LAMINATE

KEYNOTES

	Keynote Text
6.6	10" WIDE BENCH/CANE RAIL
6.13	3/4" FINISHED END PANEL, TO MATCH CABINETS
6.14	5-1/2" APRON (27" KNEE SPACE)
10.1	10 11 00 DOUBLE-TRACK SLIDING WHITEBOARD
10.2	
10.4	10 22 39 FOLDING PANEL PARTITION, 22' TALL
10.12	DISPLAY RAIL
10.21	10 44 00 SEMI-RECESSED FIRE EXTINGUISHER CABINET
10.33	10 28 00 SURFACE-MTD PT DISPENSER
10.34	10 29 00 SURFACE-MTD SOAP DISPENSER
11.5	FOIC DISHWASHER

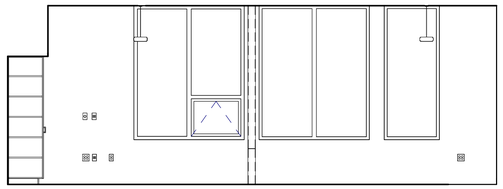

12 CLASSROOM 116 NORTH (TYP OF 5)
1/4" = 1'-0"

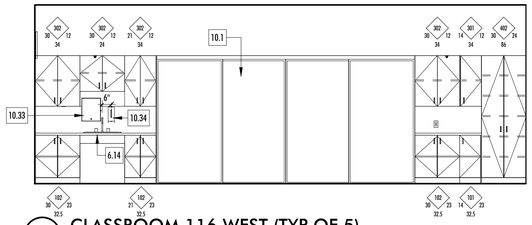

11 CLASSROOM 116 WEST (TYP OF 5)
1/4" = 1'-0"

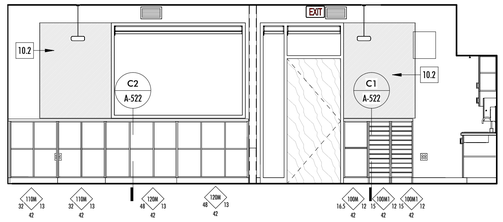

10 CLASSROOM 116 SOUTH
1/4" = 1'-0"

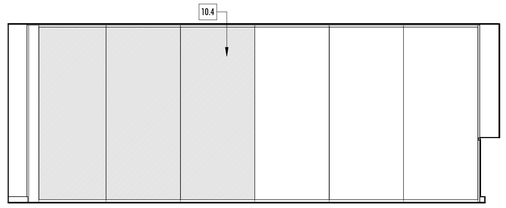

9 CLASSROOM 116 EAST
1/4" = 1'-0"

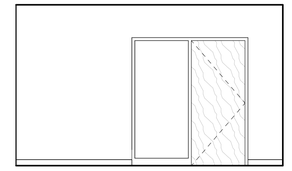

8 CORRIDOR 111 WEST
1/4" = 1'-0"

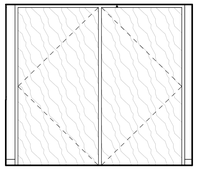

7 CORRIDOR 111 EAST
1/4" = 1'-0"

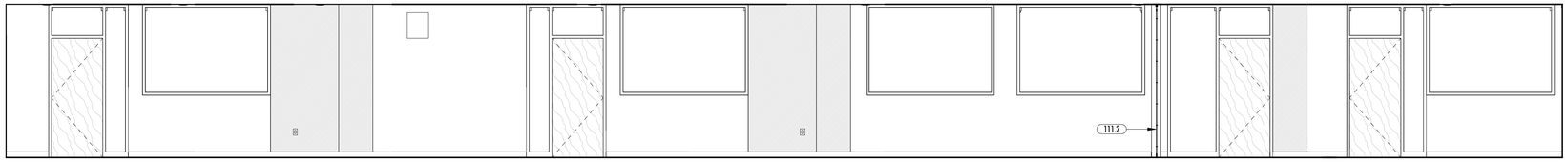

6 CORRIDOR 111 NORTH
1/4" = 1'-0"

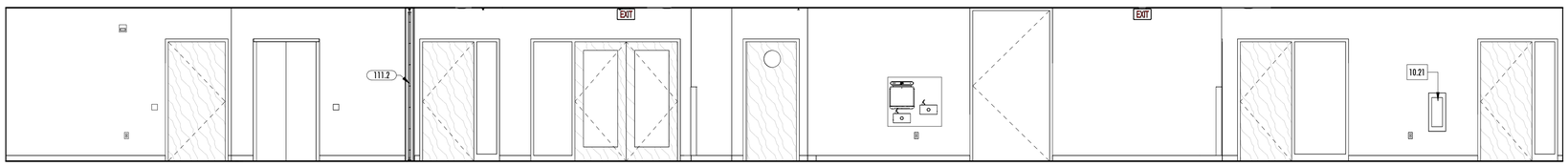

5 CORRIDOR 111 SOUTH
1/4" = 1'-0"

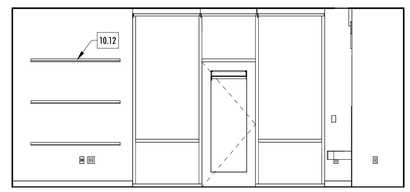

4 PRESCHOOL 118 WEST
1/4" = 1'-0"

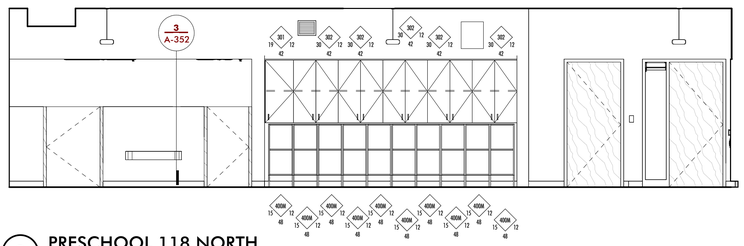

3 PRESCHOOL 118 NORTH
1/4" = 1'-0"

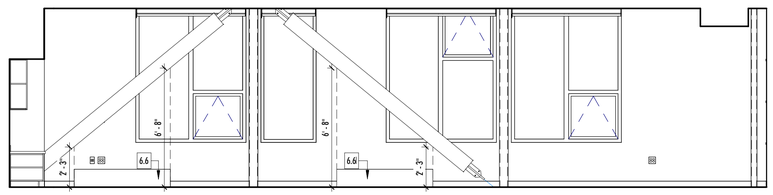

2 PRESCHOOL 118 SOUTH
1/4" = 1'-0"

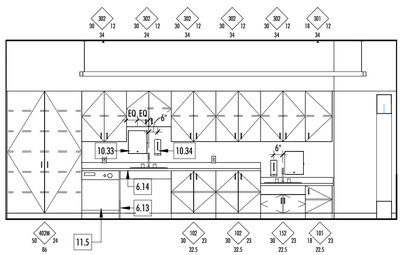

1 PRESCHOOL 118 EAST
1/4" = 1'-0"

3427 BEACON AVE S
SEATTLE 98144
ANJALI@AGRANTDESIGN.COM
206-512-4209

anjali grant design LLC

3700 E MERCER WAY
BARNABIE POINT PROJECT

NO.	DATE	DESCRIPTION
	4 JUNE 2025	BUILDING PERMIT

PROJECT:

INTERIOR ELEVATIONS L01

A-206

12/12/2025 5:01:59 PM C:\Users\EastonValter\Documents\BIPP_PS6_R24_CD_easton7605R.rvt
© ANJALI GRANT DESIGN LLC ORIGINAL SHEET SIZE: 24" X 36"

WALL FINISH LEGEND

- CERAMIC TILE 1
- CERAMIC TILE 2
- 10 11 23 TACKBOARD
- FIBER REINFORCED LAMINATE
- WOOD SLAT ACOUSTICAL PANELS
- FABRIC-WRAPPED ACOUSTICAL PANELS
- VENEER PLYWD PANELING
- GYM WALL PAD 1 (CUSTOM FABRIC)
- GYM WALL PAD 2

KEYNOTES

	Keynote Text
1.0	LOCATE ALL MEP & FIRE PROTECTION PIPING, DUCTS, WIRING AND EQUIPMENT ABOVE BOTTOM FLANGE OF WIDE-FLANGE BEAMS, TYP THIS ROOM
6.5	1-1/2" THICK FINISHED END PANEL, TO MATCH CABINETS
6.15	CASEWORK FILLER PANEL
11.6	11 66 25 COLUMN COVERS (SAFETY PADS), CUSTOM FABRIC

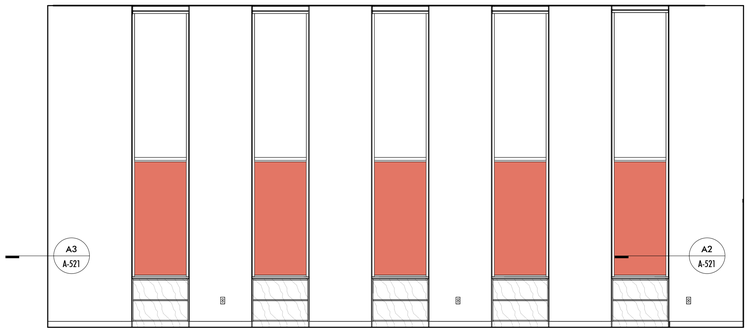

4 CHAPEL/ MUSIC 103A SOUTH
1/4" = 1'-0"

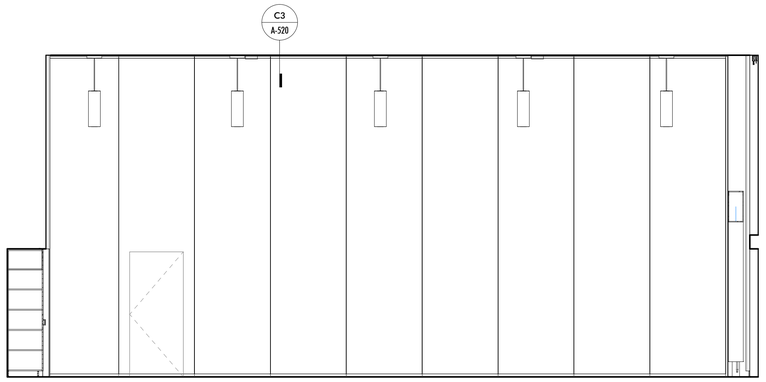

3 CHAPEL/ MUSIC 103A NORTH
1/4" = 1'-0"

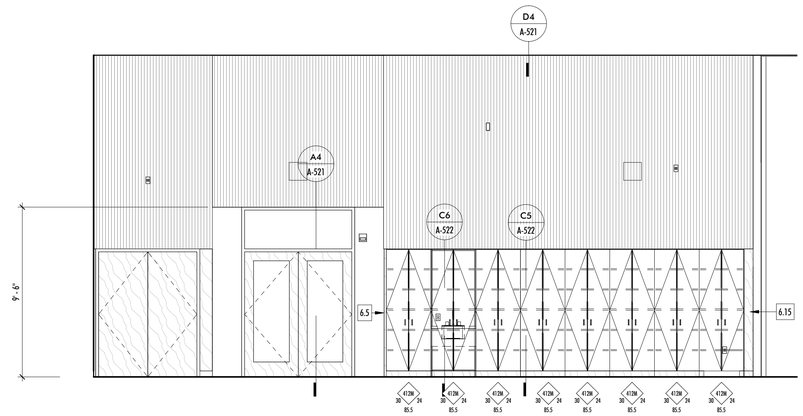

2 CHAPEL/ MUSIC 103A WEST
1/4" = 1'-0"

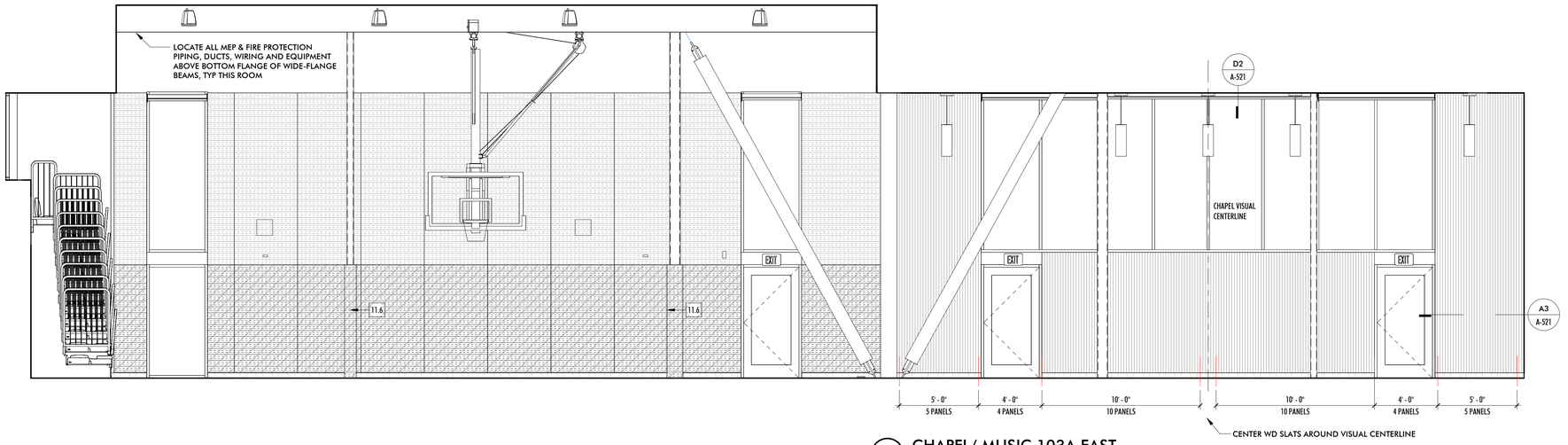

1 CHAPEL/ MUSIC 103A EAST
1/4" = 1'-0"

anjali grant design LLC
3427 BEACON AVE S
SEATTLE 98144
ANJALI@AGRANTDESIGN.COM
206-512-4209

3700 E MERCER WAY
BARNABIE POINT PROJECT

NO.	DATE	DESCRIPTION

4 JUNE 2025
BUILDING PERMIT

PROJECT:

INTERIOR ELEVATIONS L01

A-207

12/12/2025 5:02:00 PM C:\Users\EashaVadav\Documents\BPP_PS8_R24_CD_eashaTB55R.rvt
© ANJALI GRANT DESIGN LLC ORIGINAL SHEET SIZE: 24" X 36"

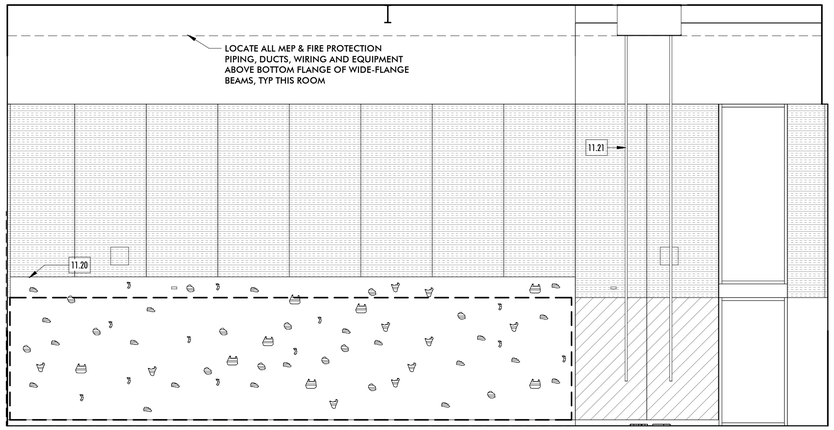

4 MP 103B WEST
1/4" = 1'-0"

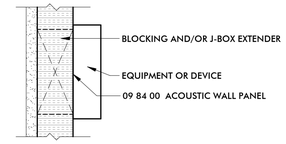

5 TYP AWP BLOCKING DTL
3" = 1'-0"

WALL FINISH LEGEND

- CERAMIC TILE 1
- CERAMIC TILE 2
- 10 11 23 TACKBOARD
- FIBER REINFORCED LAMINATE
- WOOD SLAT ACOUSTICAL PANELS
- FABRIC-WRAPPED ACOUSTICAL PANELS
- VENEER PLYWD PANELING
- GYM WALL PAD 1 (CUSTOM FABRIC)
- GYM WALL PAD 2

KEYNOTES

	Keynote Text
1.0	LOCATE ALL MEP & FIRE PROTECTION PIPING, DUCTS, WIRING AND EQUIPMENT ABOVE BOTTOM FLANGE OF WIDE-FLANGE BEAMS, TYP THIS ROOM
6.6	10" WIDE BENCH/CANE RAIL
6.14	5-1/2" APRON (27" KNEE SPACE)
10.29	11 66 43 SCOREBOARD WITH REMOTE CONTROL CONSOLE
10.33	10 28 00 SURFACE-MTD PT DISPENSER
10.34	10 29 00 SURFACE-MTD SOAP DISPENSER
11.20	CLIMBING WALL WITH CRASH PADS HANGING IN FRONT OF WALL
11.21	CLIMBING ROPES

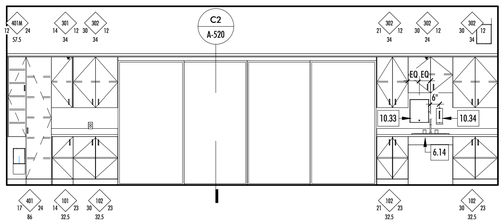

3.5 CLASSROOM 115 EAST
1/4" = 1'-0"

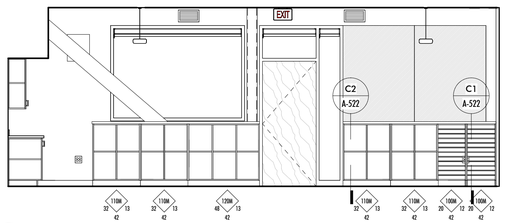

2.5 CLASSROOM 115 SOUTH
1/4" = 1'-0"

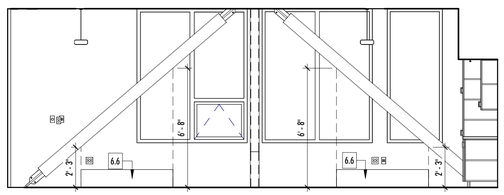

2 CLASSROOM 115 NORTH
1/4" = 1'-0"

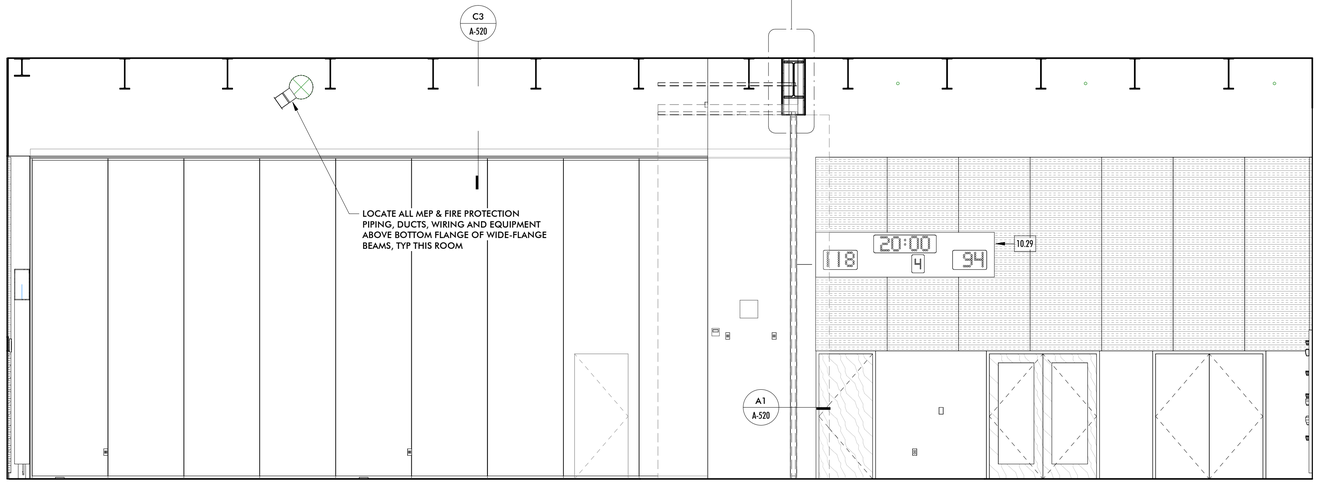

3 MP 103B SOUTH
1/4" = 1'-0"

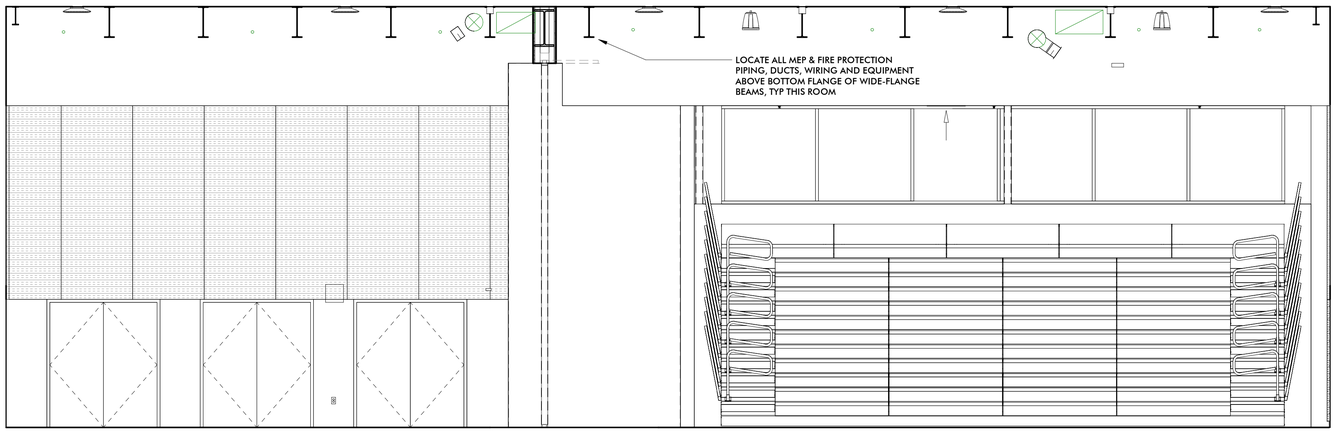

1 MP 103B NORTH
1/4" = 1'-0"

3427 BEACON AVE S
SEATTLE 98144
ANJALI@AGRANTDESIGN.COM
206-512-4209

anjali grant design LLC

3700 E MERCER WAY
BARNABIE POINT PROJECT

NO. DATE DESCRIPTION

4 JUNE 2025
BUILDING PERMIT

PROJECT:

INTERIOR ELEVATIONS L01

A-208

12/12/2025 5:02:05 PM C:\Users\Anjali\Desktop\Documents\BP_PSR_R24_CD_asahaT8569.rvt
© ANJALI GRANT DESIGN LLC ORIGINAL SHEET SIZE: 24" X 36"

WALL FINISH LEGEND

- CERAMIC TILE 1
- CERAMIC TILE 2
- 10 11 23 TACKBOARD
- FIBER REINFORCED LAMINATE

KEYNOTES

	Keynote Text
6.6	10" WIDE BENCH/CANE RAIL
6.8	SOLID WOOD BENCH
6.9	FILLER PANEL, SCRIBE TO BRACE FRAME
6.13	3/4" FINISHED END PANEL, TO MATCH CABINETS
6.14	5-1/2" APRON (27" KNEE SPACE)
6.21	06 41 16 SCRIBE CASEWORK FILLER PANEL AROUND BEAM AND SEAL WITH COLOR MATCHED SEALANT
6.30	06 41 16 LOCKABLE CABINET
10.1	10 11 00 DOUBLE-TRACK SLIDING WHITEBOARD
10.2	
10.13	WHITEBOARD
10.17	10 11 00 SINGLE-TRACK SLIDING WHITEBOARD (IN FRONT OF TACKBOARD)
10.32	10 21 23 FABRIC CURTAIN
10.33	10 28 00 SURFACE-MTD PT DISPENSER
10.34	10 29 00 SURFACE-MTD SOAP DISPENSER
11.5	FOIC DISHWASHER
11.7	FOIC REFRIGERATOR
11.9	FOIC MICROWAVE

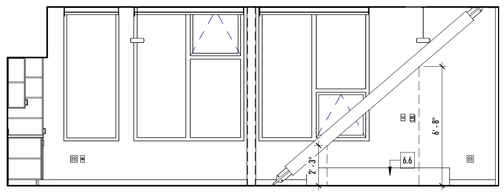

20 CLASSRM 207 SOUTH
1/4" = 1'-0"

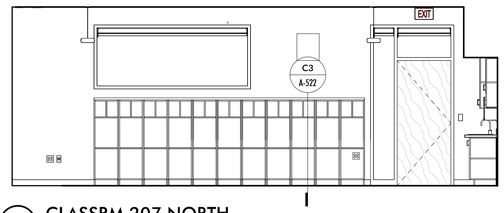

19 CLASSRM 207 NORTH
1/4" = 1'-0"

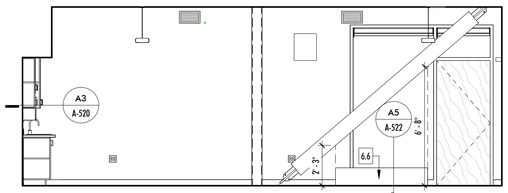

18 CLASSRM 202 SOUTH
1/4" = 1'-0"

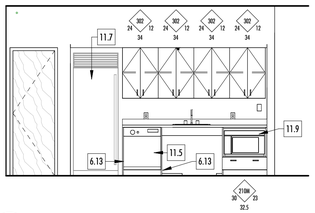

17 BREAK ROOM 211 NORTH
1/4" = 1'-0"

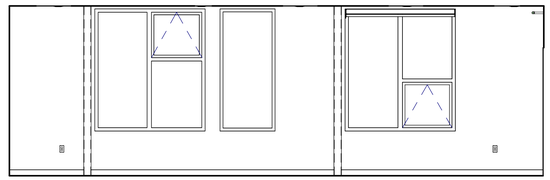

16 BREAK ROOM 211 SOUTH
1/4" = 1'-0"

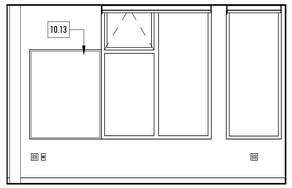

15 BREAKOUT 200A NORTH
1/4" = 1'-0"

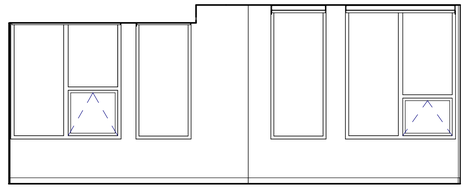

14 BREAKOUT 200A WEST
1/4" = 1'-0"

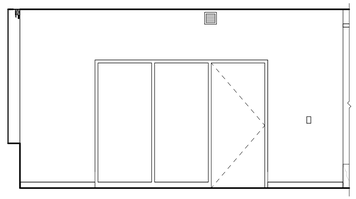

13 BREAKOUT 200A EAST
1/4" = 1'-0"

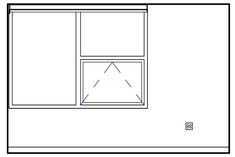

12 LRC 205 NORTH
1/4" = 1'-0"

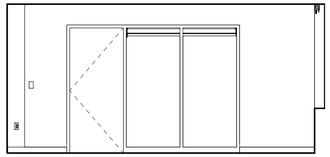

11 LRC 205 WEST
1/4" = 1'-0"

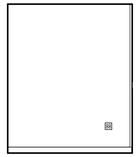

10 LRC 205 SOUTH
1/4" = 1'-0"

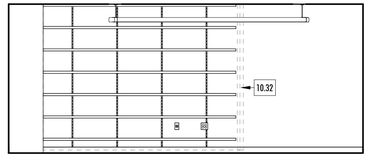

9 LRC 205 EAST
1/4" = 1'-0"

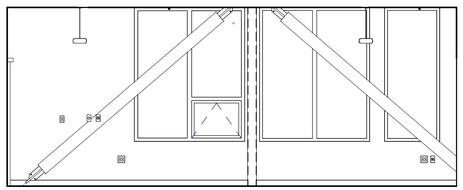

8 CLASSROOM 203 NORTH
1/4" = 1'-0"

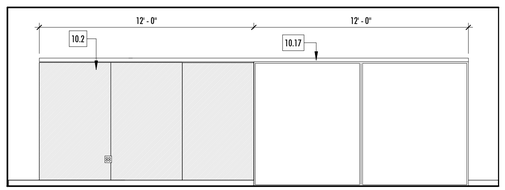

7 CLASSROOM 203 WEST (TYP OF 3)
1/4" = 1'-0"

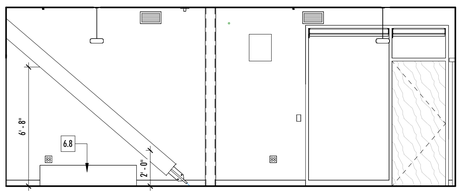

6 CLASSROOM 203 SOUTH (TYP OF 3)
1/4" = 1'-0"

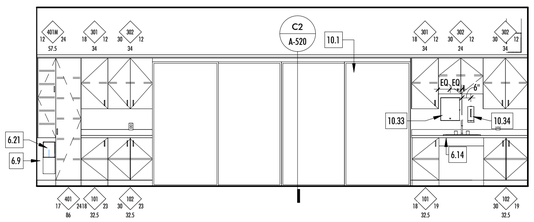

5 CLASSROOM 203 EAST (TYP OF 3)
1/4" = 1'-0"

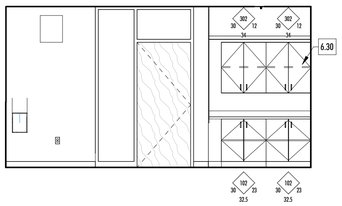

4 ADMIN 114 WEST
1/4" = 1'-0"

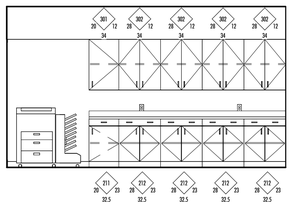

3 ADMIN 114 EAST
1/4" = 1'-0"

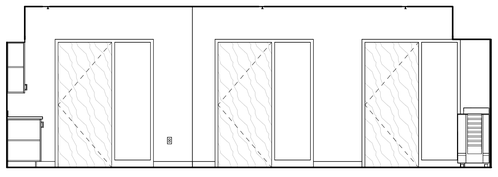

2 ADMIN 114 NORTH
1/4" = 1'-0"

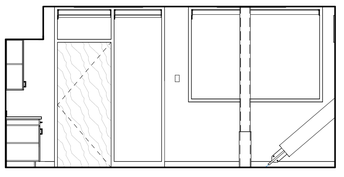

1 ADMIN 114 SOUTH
1/4" = 1'-0"

anjali grant design LLC
3427 BEACON AVE S
SEATTLE 98144
ANJALI@AGRANTDESIGN.COM
206-512-4209

3700 E MERCER WAY
BARNABIE POINT PROJECT

NO.	DATE	DESCRIPTION
	4 JUNE 2025	BUILDING PERMIT

PROJECT:

INTERIOR ELEVATIONS L01/ L02

A-209

12/12/2025 5:03:07 PM C:\Users\EstherYates\Documents\BPP_PS8_R24_CD_estherlYates.rvt
© ANJALI GRANT DESIGN LLC ORIGINAL SHEET SIZE: 24" X 36"

WALL FINISH LEGEND

- CERAMIC TILE 1
- CERAMIC TILE 2
- 10 11 23 TACKBOARD
- FIBER REINFORCED LAMINATE

KEYNOTES

	Keynote Text
6.6	10" WIDE BENCH/CANE RAIL
6.13	3/4" FINISHED END PANEL, TO MATCH CABINETS
6.14	5-1/2" APRON (27" KNEE SPACE)
10.3	10 51 00 LOCKERS
10.21	10 44 00 SEMI-RECESSED FIRE EXTINGUISHER CABINET
11.9	FOIC MICROWAVE

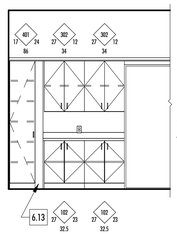

10 CLASSROOM 206 WEST
1/4" = 1'-0"

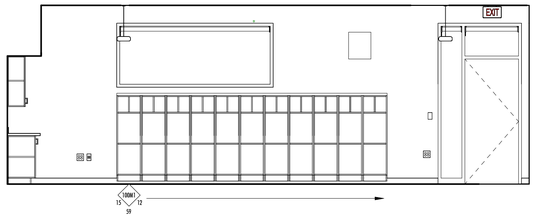

9 CLASSROOM 206 NORTH
1/4" = 1'-0"

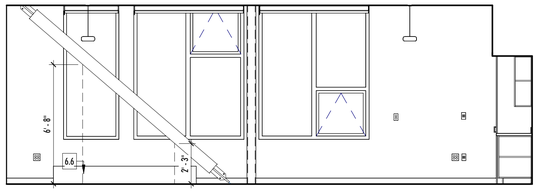

8 CLASSROOM 206 SOUTH
1/4" = 1'-0"

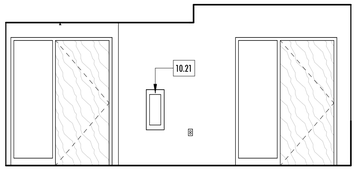

7 CORRIDOR 300 WEST
1/4" = 1'-0"

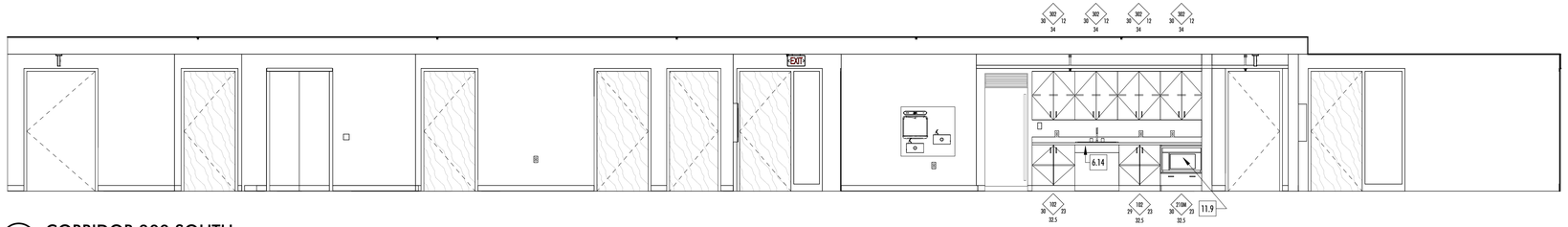

6 CORRIDOR 300 SOUTH
1/4" = 1'-0"

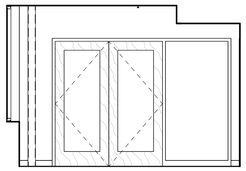

5 CORRIDOR 300 EAST
1/4" = 1'-0"

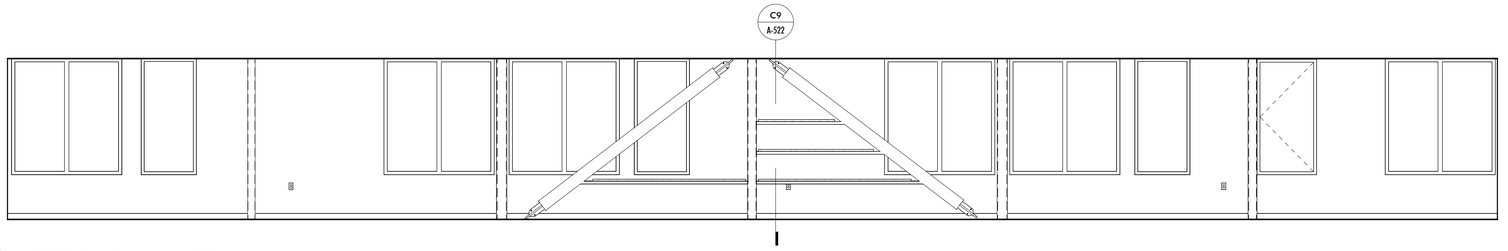

4 CORRIDOR 300 NORTH
1/4" = 1'-0"

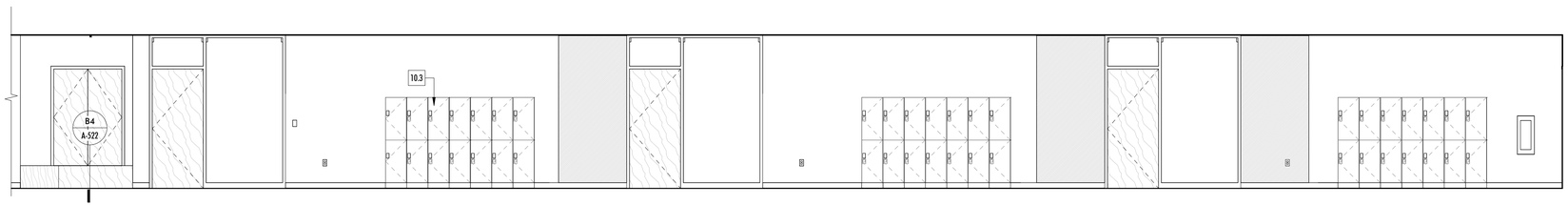

3 CORRIDOR 200 NORTH
1/4" = 1'-0"

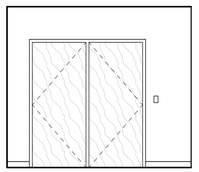

2 CORRIDOR 200 EAST
1/4" = 1'-0"

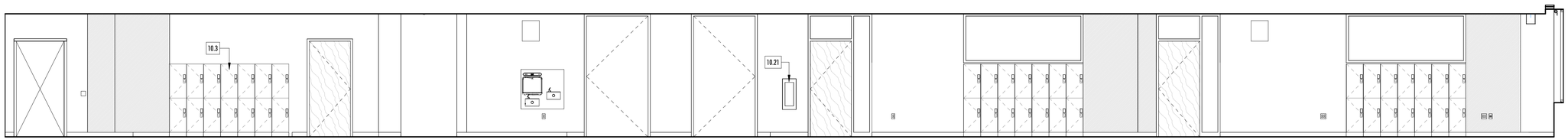

1 CORRIDOR 200 SOUTH
1/4" = 1'-0"

anjali grant design LLC
3427 BEACON AVE S
SEATTLE 98144
ANJALI@AGRANTDESIGN.COM
206-512-4209

3700 E MERCER WAY
BARNABIE POINT PROJECT

NO.	DATE	DESCRIPTION
	4 JUNE 2025	BUILDING PERMIT

PROJECT:

INTERIOR ELEVATIONS L02/ L03

A-210

12/12/2025 5:02:14 PM C:\Users\Eamin\Desktop\Documents\BP_PSR_R24_CD_eamin7185R.rvt
© ANJALI GRANT DESIGN LLC ORIGINAL SHEET SIZE: 24" X 36"

WALL FINISH LEGEND

CERAMIC TILE 1

CERAMIC TILE 2

10 11 23
TACKBOARD

FIBER REINFORCED
LAMINATE

KEYNOTES

	Keynote Text
6.13	3/4" FINISHED END PANEL, TO MATCH CABINETS
6.14	5-1/2" APRON (27" KNEE SPACE)
11.5	FOIC DISHWASHER
11.7	FOIC REFRIGERATOR
11.9	FOIC MICROWAVE

ROLLER SHADE SCHEDULE

Room: Number	Room: Name	Type Comments	Shade Width	Count
002	STEM/ SCIENCE	INTERIOR	2' - 0"	2
002	STEM/ SCIENCE	INTERIOR	5' - 8"	2
003	ART	INTERIOR	2' - 0"	1
003	ART	INTERIOR	3' - 2"	1
003	ART	INTERIOR	9' - 8"	1
004	FACULTY	INTERIOR	3' - 0"	1
004	FACULTY	INTERIOR	4' - 6"	1
004	FACULTY	INTERIOR	7' - 8"	1
005	WORKROOM	INTERIOR	4' - 6"	1
006	CONFERENCE	INTERIOR	3' - 0"	1
006	CONFERENCE	INTERIOR	4' - 6"	1
006	CONFERENCE	INTERIOR	7' - 8"	1
103A	CHAPEL	EXTERIOR	3' - 2 3/4"	10
103A	CHAPEL	EXTERIOR	7' - 5"	2
103A	CHAPEL	EXTERIOR	13' - 10"	1
103B	GYM/MULTI	EXTERIOR	3' - 10"	2
107	OFFICE	INTERIOR	2' - 0"	1
107	OFFICE	EXTERIOR	6' - 2"	1
112	OFF	EXTERIOR	6' - 2"	1
113	CLASSROOM	INTERIOR	1' - 2"	1
113	CLASSROOM	INTERIOR	3' - 0"	1
113	CLASSROOM	INTERIOR	7' - 2"	1
114	ADMIN	INTERIOR	2' - 8"	1
114	ADMIN	INTERIOR	3' - 0"	1
114	ADMIN	INTERIOR	7' - 2"	1
115	CLASSROOM	INTERIOR	1' - 2"	1
115	CLASSROOM	INTERIOR	3' - 0"	1
115	CLASSROOM	INTERIOR	7' - 2"	1
116	CLASSROOM	INTERIOR	1' - 2"	1
116	CLASSROOM	INTERIOR	3' - 0"	1
116	CLASSROOM	INTERIOR	7' - 2"	1
117	PRESCHOOL	EXTERIOR	2' - 0"	1
117	PRESCHOOL	EXTERIOR	3' - 1"	1
117	PRESCHOOL	EXTERIOR	3' - 3"	1
117	PRESCHOOL	EXTERIOR	6' - 2"	1
117	PRESCHOOL	EXTERIOR	7' - 4"	1

ROLLER SHADE SCHEDULE

Room: Number	Room: Name	Type Comments	Shade Width	Count
117	PRESCHOOL	INTERIOR	9' - 6"	2
118	PRESCHOOL	INTERIOR	1' - 2"	1
118	PRESCHOOL	EXTERIOR	2' - 0"	1
118	PRESCHOOL	EXTERIOR	3' - 1"	1
118	PRESCHOOL	EXTERIOR	3' - 2"	1
118	PRESCHOOL	EXTERIOR	3' - 9 1/2"	2
118	PRESCHOOL	EXTERIOR	6' - 2"	3
119	LRC-1	INTERIOR	3' - 0"	1
119	LRC-1	EXTERIOR	3' - 1"	2
200	CIRC	EXTERIOR	3' - 1"	1
200	CIRC	EXTERIOR	6' - 2"	1
200A	BREAKOUT/LIB RARY	EXTERIOR	3' - 1"	2
200A	BREAKOUT/LIB RARY	EXTERIOR	6' - 2"	2
202	CLASSROOM	INTERIOR	3' - 0"	1
202	CLASSROOM	INTERIOR	4' - 6"	1
203	CLASSROOM	INTERIOR	3' - 0"	1
203	CLASSROOM	INTERIOR	4' - 6"	1
204	CLASSROOM	INTERIOR	3' - 0"	1
204	CLASSROOM	INTERIOR	4' - 6"	1
205	LRC-2	INTERIOR	6' - 2"	1
205	LRC-2	EXTERIOR	7' - 9"	1
206	CLASSROOM	INTERIOR	1' - 2"	1
206	CLASSROOM	INTERIOR	3' - 0"	1
206	CLASSROOM	EXTERIOR	3' - 1"	1
206	CLASSROOM	EXTERIOR	6' - 2"	2
206	CLASSROOM	INTERIOR	8' - 5"	1
207	CLASSROOM	INTERIOR	1' - 2"	1
207	CLASSROOM	INTERIOR	3' - 0"	1
207	CLASSROOM	EXTERIOR	3' - 1"	1
207	CLASSROOM	EXTERIOR	6' - 2"	2
207	CLASSROOM	INTERIOR	8' - 5"	1
211A	BREAK ROOM	EXTERIOR	3' - 1"	1
211A	BREAK ROOM	EXTERIOR	6' - 2"	2
213	RENTAL	EXTERIOR	3' - 1"	1
213	RENTAL	EXTERIOR	6' - 2"	2
213C	OFFICE	EXTERIOR	6' - 2"	1

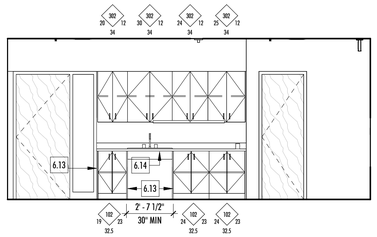

4 CAMP SCHECHTER NORTH
1/4" = 1'-0"

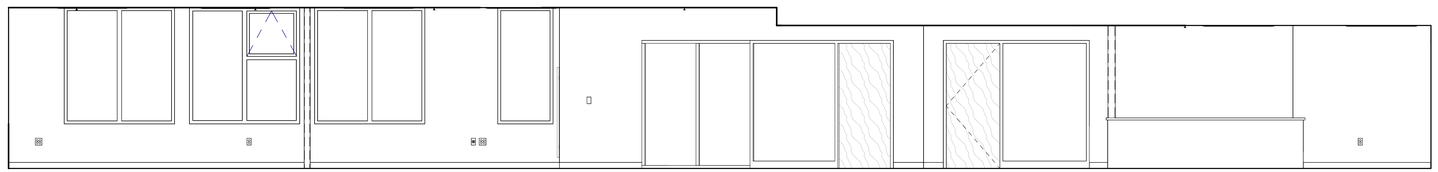

3 ART/STEM/OPEN OFFICE SOUTH
1/4" = 1'-0"

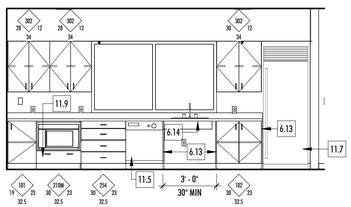

2 ART/STEM/OPEN OFFICE WEST
1/4" = 1'-0"

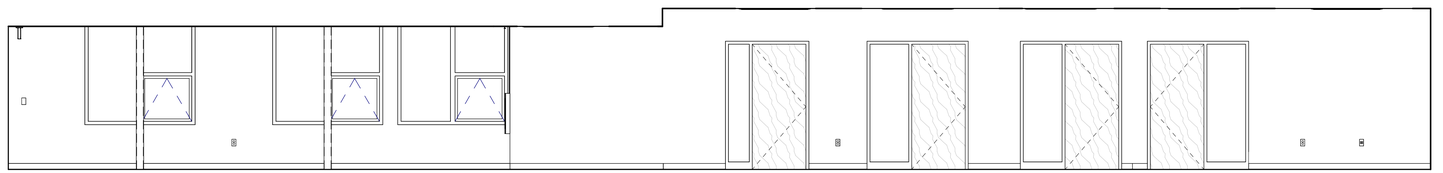

1 ART/STEM/OPEN OFFICE NORTH
1/4" = 1'-0"

anjali grant design LLC
3427 BEACON AVE S
SEATTLE 98144
ANJALI@AGRANTDESIGN.COM
206-512-4209

3700 E MERCER WAY
BARNABIE POINT PROJECT

NO.	DATE	DESCRIPTION
	4 JUNE 2025	BUILDING PERMIT

PROJECT:

INTERIOR ELEVATIONS L03

A-211

12/12/2025 5:02:18 PM C:\Users\EstherY\Autodesk\Documents\BIP_R58_R24_CD_estherY8558.rvt
© ANJALI GRANT DESIGN LLC ORIGINAL SHEET SIZE: 24" X 36"

SIGN SCHEDULE

RM	ROOM NAME	SIGN TYPE	NOTES
B01			
001A	W/D	TYPE 1	
001B	TLT	RESTROOM SIGN	
001C	TLT	RESTROOM SIGN	
001D	TLT	RESTROOM SIGN	
001E	MOP	TYPE 1	
002	STEM/ SCIENCE	TYPE 2	
002A	STOR	TYPE 1	
002B	ELECTRICAL	TYPE 1	
003	ART	TYPE 2	
003A	KILN	TYPE 1	
004	FACULTY	TYPE 2	
005	WORKROOM	TYPE 2	
006	CONFERENCE	TYPE 2	
006A	STORAGE	TYPE 1	
007	MEP/STOR	TYPE 1	
008	MP STORAGE	TYPE 1	
008A	MDF	TYPE 1	
008B	SPRINKLER	TYPE 1	
009	TLT	RESTROOM SIGN	
SW-0	WEST STAIR	STAIR SIGN	
L01			
101A	MOP	TYPE 1	
102	KITCHEN	TYPE 1	
103A	CHAPEL	TYPE 2; MAX OCCUPANCY SIGN	SHOW ASSEMBLY LAYOUT DIAGRAM
103B	GYM/MULTI	TYPE 2; MAX OCCUPANCY SIGNS (2)	SHOW ASSEMBLY LAYOUT DIAGRAM
103C	STORAGE	TYPE 1	
103D	STOR	TYPE 1	
103E	STORAGE	TYPE 1	
104	WOMEN'S TLTS	RESTROOM SIGN	INTERCHANGEABLE ROOM NAME
105	MEN'S TLTS	RESTROOM SIGN	
107	OFFICE	TYPE 2	
111A	TLT	RESTROOM SIGN	
111B	TLTS	RESTROOM SIGN	
111C	TLT	RESTROOM SIGN	
111D	EC	TYPE 1	

SIGN SCHEDULE

RM	ROOM NAME	SIGN TYPE	NOTES
112	OFF	TYPE 2	
113	CLASSROOM	TYPE 2	
114	ADMIN	TYPE 2	
114A	OFF	TYPE 2	
114B	OFF	TYPE 2	
114C	OFF	TYPE 2	
114D	OFF	TYPE 2	
115	CLASSROOM	TYPE 2	
116	CLASSROOM	TYPE 2	
117	PRESCHOOL	TYPE 2	
117A	TLT	RESTROOM SIGN	
117B	TLT	RESTROOM SIGN	
118	PRESCHOOL	TYPE 2	
118A	TLT	RESTROOM SIGN	
118B	TLT	RESTROOM SIGN	
119	LRC-1	TYPE 2	
SE-1	EAST STAIR	STAIR SIGN	
SW-1	WEST STAIR	STAIR SIGN	
L02			
200A	BREAKOUT/LIBRARY	TYPE 2	
200B	TLT	RESTROOM SIGN	
200C	TLT	RESTROOM SIGN	
200D	TLT	RESTROOM SIGN	
200E	TLT	RESTROOM SIGN	
200F	SHARED IDF	TYPE 1	
200G	MOP	TYPE 1	
200H	EC	TYPE 1	
201	TLT	RESTROOM SIGN	
202	CLASSROOM	TYPE 2	
203	CLASSROOM	TYPE 2	
204	CLASSROOM	TYPE 2	
205	LRC-2	TYPE 2	
206	CLASSROOM	TYPE 2	
207	CLASSROOM	TYPE 2	
211A	BREAK ROOM	TYPE 1	
211B	MOP	TYPE 1	
211C	TLT	RESTROOM SIGN	
211D	TLT	RESTROOM SIGN	
212	RENTAL	TYPE 2	
212A	CONF ROOM	TYPE 2	
212B	OFFICE	TYPE 2	

SIGN SCHEDULE

RM	ROOM NAME	SIGN TYPE	NOTES
213	RENTAL	TYPE 2	
213A	CONF ROOM	TYPE 2	
213B	WORKRM	TYPE 2	
213C	OFFICE	TYPE 2	
213D	MECH MEZZ	TYPE 1	
SE-2	EAST STAIR	STAIR SIGN	
SW-2	WEST STAIR	STAIR SIGN	
L03			
300A	TLT	RESTROOM SIGN	
300B	TLT	RESTROOM SIGN	
300C	TLT	RESTROOM SIGN	
300D	JC	TYPE 1	
300E	IDF	TYPE 1	
300F	RENTAL OFFICE	TYPE 2	
300G	TLT	RESTROOM SIGN	
301A	OFFICE	TYPE 2	
301B	OFFICE	TYPE 2	
301C	OFFICE	TYPE 2	
301D	ENTRY/ART/STEM	TYPE 2	
301E	SNOEZELEN RM	TYPE 2	
301F	MUSIC	TYPE 2	
301G	GAME/TECH	TYPE 2	
301H	OFFICE	TYPE 2	
302	RENTAL	TYPE 2	
302A	OFFICE	TYPE 2	
302B	OFFICE	TYPE 2	
302C	OFFICE	TYPE 2	
302D	OFFICE	TYPE 2	
302E	STOR	TYPE 1	
302F	STOR	TYPE 1	
303	ENTRY	TYPE 2	
303A	CONF ROOM	TYPE 2	
303B	OFF/PHONE	TYPE 2	
303C	COO	TYPE 2	
303D	DEV/COMM	TYPE 2	
303E	PROGRAM OFFICE	TYPE 2	
303F	EXEC OFFICE	TYPE 2	
SE-3	EAST STAIR	STAIR SIGN	
SW-3	WEST STAIR	STAIR SIGN	

SIGNAGE

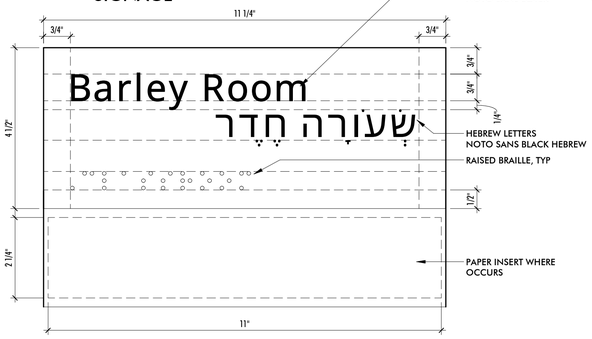

TYP ROOM SIGN MOUNTING

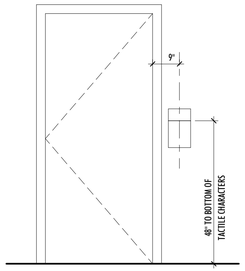

THRESHOLD DIAGRAM

IF PROVIDED, THRESHOLDS AT DOORWAYS SHALL BE 1/2 INCH MAXIMUM IN HEIGHT. RAISED THRESHOLDS AND CHANGES IN LEVEL AT DOORWAYS SHALL COMPLY WITH SECTIONS 302 AND 303.

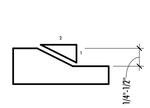

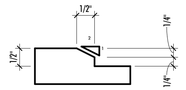

CHANGES IN LEVEL GREATER THAN 1/4 INCH IN HEIGHT AND NOT MORE THAN 1/2 INCH MAXIMUM IN HEIGHT SHALL BE BEVELED WITH A SLOPE NOT STEEPER THAN 1:2 PER ANSI 303.3

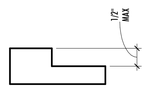

CHANGES IN LEVEL OF 1/4 INCH MAXIMUM IN HEIGHT SHALL BE PERMITTED TO BE VERTICAL PER ANSI 303.2

APPLICABLE CODES

2017 ICC A117.1
2021 WASHINGTON STATE BUILDING CODE (WSBC)
2021 WASHINGTON STATE ENERGY CODE (WSEC)

TURNING & FLOOR CLEARANCES

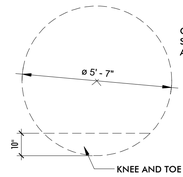

CIRCULAR TURNING SPACE PER ANSI A117.1 304.3.1.1

MANEUVERING CLEARANCES AT DOORS

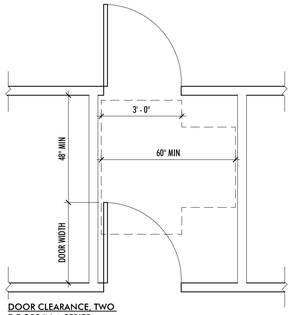

DOOR CLEARANCE, TWO DOORS IN A SERIES

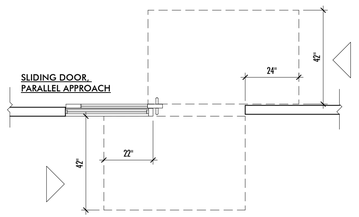

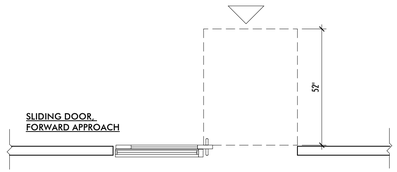

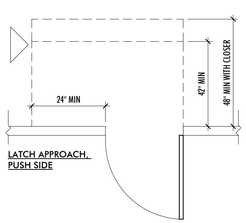

LATCH APPROACH, PUSH SIDE

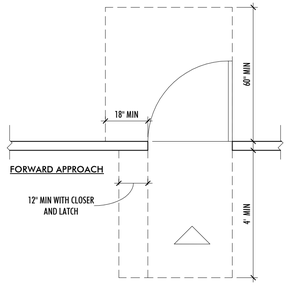

FORWARD APPROACH

12" MIN WITH CLOSER AND LATCH

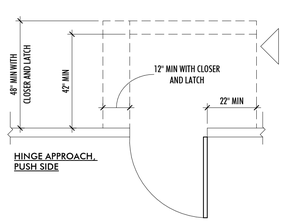

HINGE APPROACH, PUSH SIDE

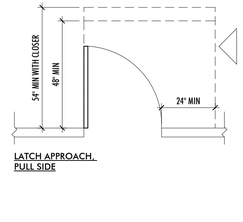

LATCH APPROACH, PULL SIDE

ADULTS AND STUDENTS ON LEVELS B01, L02

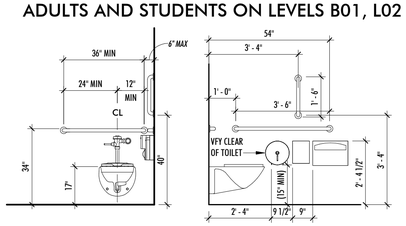

REAR WALL SIDE WALL

PRESCHOOL (2.5-5)

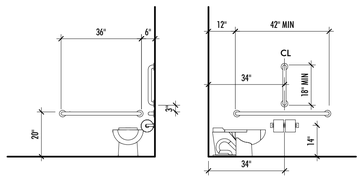

REAR WALL SIDE WALL

STUDENTS ON L01 (AGES 5-9)

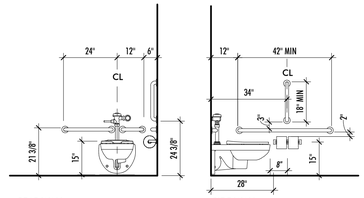

REAR WALL SIDE WALL

ACCESSIBLE RESTROOM

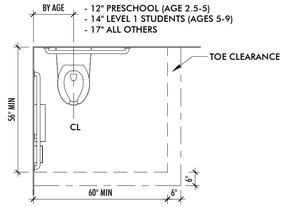

FLOOR PLAN

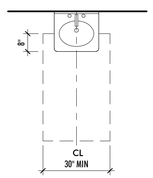

FRONT APPROACH

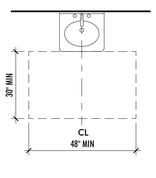

PARALLEL APPROACH

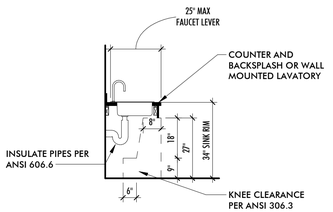

ADULT ACCESSIBLE SINK, FRONT APPROACH

MOUNTING HEIGHTS

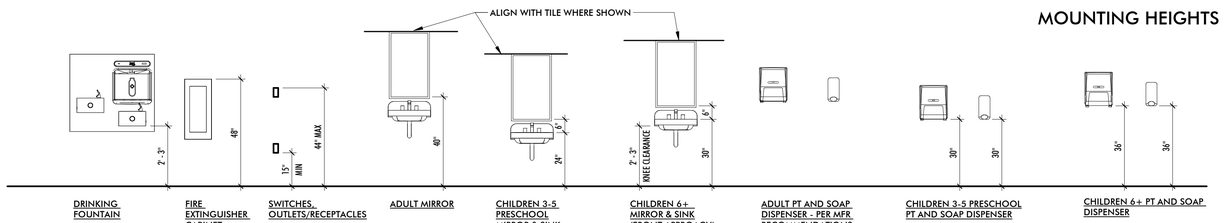

DRINKING FOUNTAIN

FIRE EXTINGUISHER CABINET

SWITCHES, OUTLETS/RECEPTACLES

REVIEW TYPICAL ARRANGEMENT OF T-STATS, SENSORS, SWITCHES, ETC WITH ARCHITECT TO ENSURE COORDINATION BETWEEN TRADES

ADULT MIRROR

CHILDREN 3-5 PRESCHOOL MIRROR & SINK (PARALLEL APPROACH)

CHILDREN 6+ MIRROR & SINK (FRONT APPROACH)

ADULT PT AND SOAP DISPENSER - PER MFR RECOMMENDATIONS FOR ADA-COMPLIANT INSTALLATION

SUBTRACT 4" AFF ABOVE COUNTERS

CHILDREN 3-5 PRESCHOOL PT AND SOAP DISPENSER

CHILDREN 6+ PT AND SOAP DISPENSER

3427 BEACON AVE S
SEATTLE 98144
ANJALI@AGRANTDESIGN.COM
206-512-4209
anjali grant design LLC

3700 E MERCER WAY
BARNABIE POINT PROJECT

NO.	DATE	DESCRIPTION
		4 JUNE 2025 BUILDING PERMIT

PROJECT:

ADA STANDARD DETAILS, TYP MOUNTING HEIGHTS AND SIGNAGE

A-252

12/12/2025 5:02:20 PM C:\Users\Esther\Documents\BPP_PSB_R24_CD_esther.rvt
© ANJALI GRANT DESIGN LLC ORIGINAL SHEET SIZE: 24" X 36"

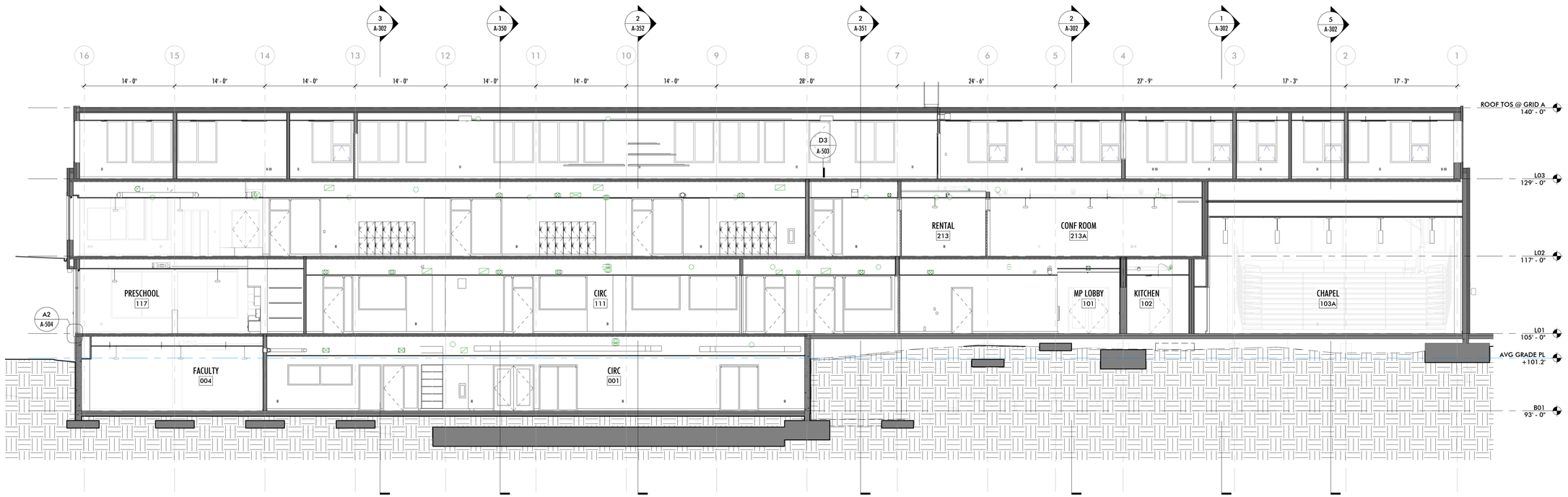

2 EAST-WEST SECTION THRU MULTIPURPOSE
1/8" = 1'-0"

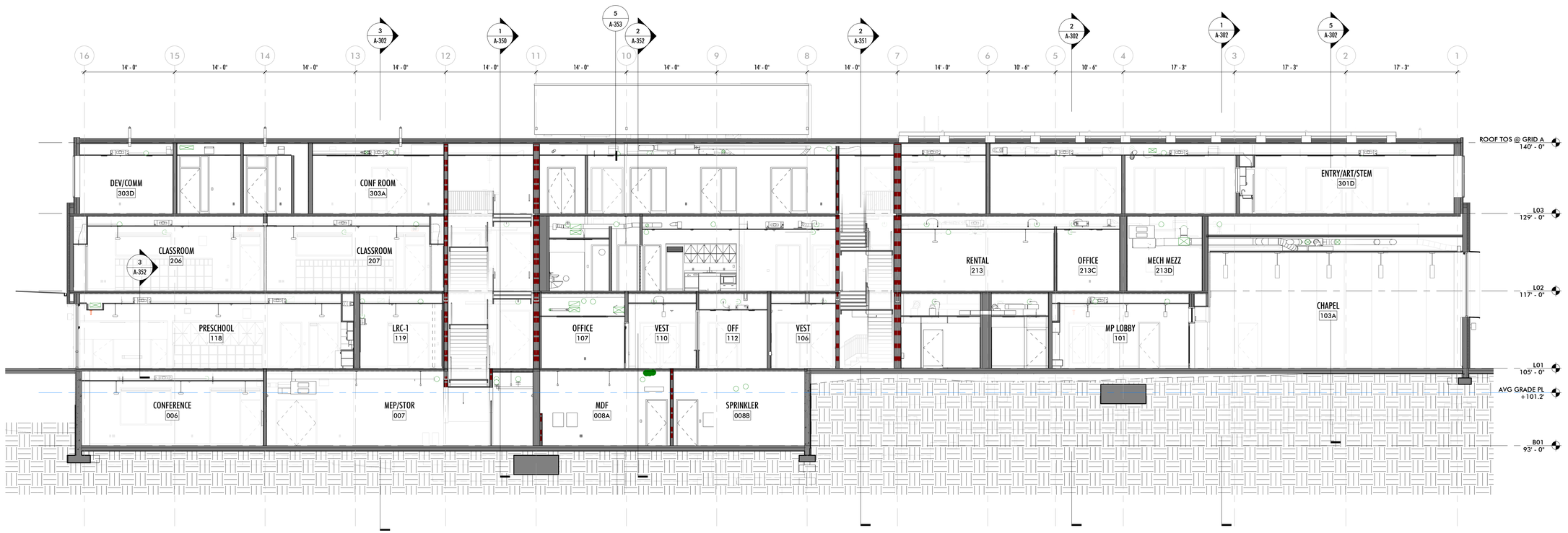

1 EAST-WEST SECTION THROUGH MUSIC
1/8" = 1'-0"

3427 BEACON AVE S
SEATTLE 98144
ANJALI@AGRANTDESIGN.COM
206-512-4209

anjali grant design LLC

3700 E MERCER WAY
BARNABIE POINT PROJECT

NO.	DATE	DESCRIPTION

4 JUNE 2025
BUILDING PERMIT

PROJECT:

BUILDING SECTIONS

A-301

12/12/2025 5:23:44 PM D:\REVIT LOCAL\BPP_PSB_RGN_CD_anjaleattle.rvt
© ANJALI GRANT DESIGN LLC ORIGINAL SHEET SIZE: 24" X 36"

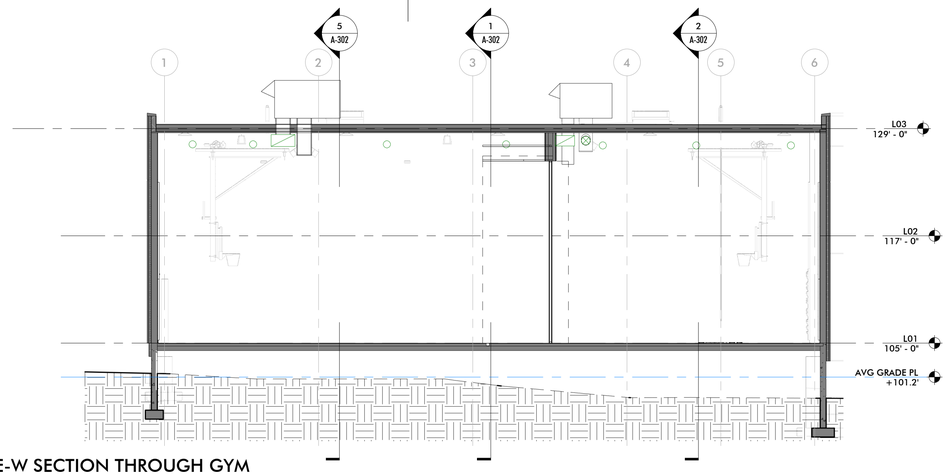

4 E-W SECTION THROUGH GYM
1/8" = 1'-0"

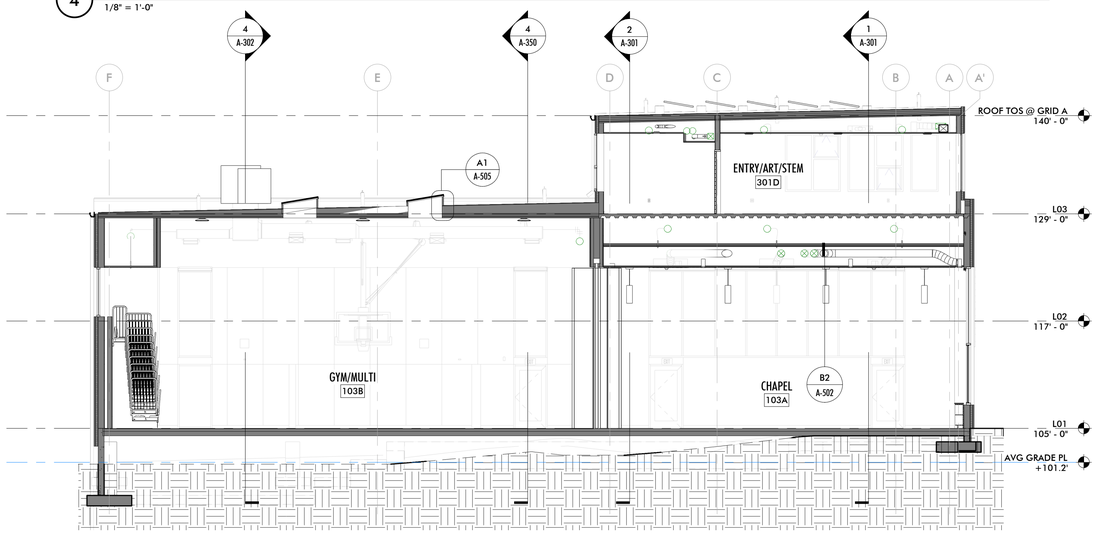

5 N-S SECTION AT GYM/MPR
1/8" = 1'-0"

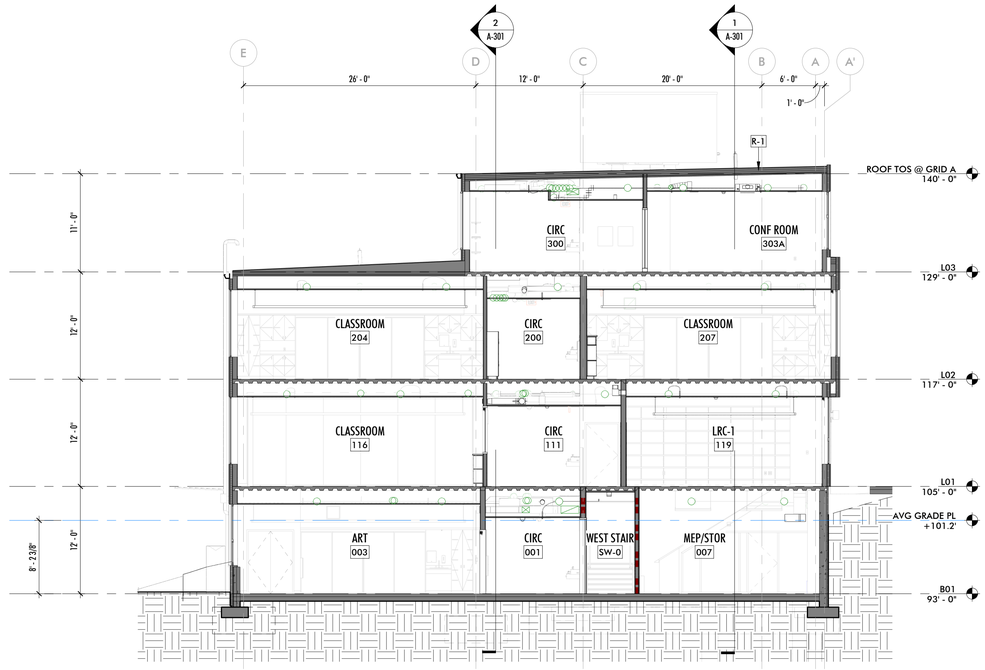

3 NORTH-SOUTH SECTION AT GRID 13
1/8" = 1'-0"

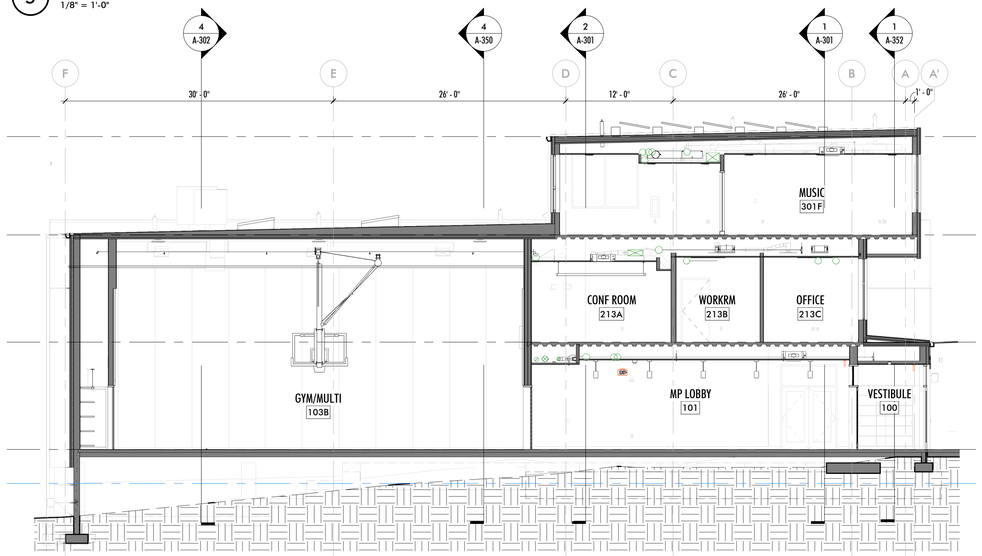

2 NORTH-SOUTH SECTION AT GRID 5
1/8" = 1'-0"

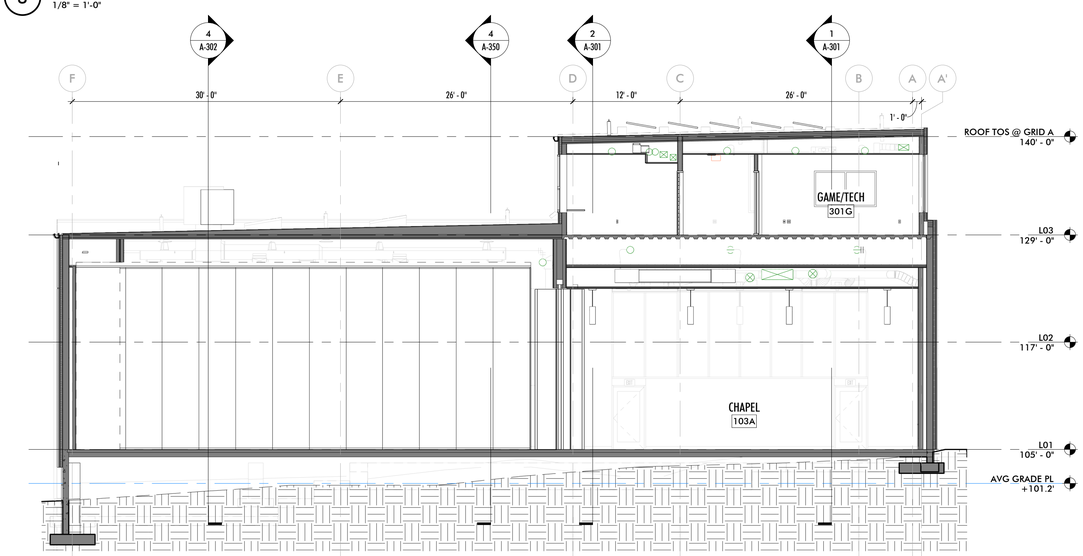

1 NORTH-SOUTH SECTION THROUGH MULTIPURPOSE & MUSIC
1/8" = 1'-0"

3427 BEACON AVE S
SEATTLE 98144
ANJALI@AGRANTDESIGN.COM
206-512-4209

anjali grant design LLC

3700 E MERCER WAY
BARNABIE POINT PROJECT

NO.	DATE	DESCRIPTION
	4 JUNE 2025	BUILDING PERMIT

PROJECT:

BUILDING SECTIONS

A-302

12/12/2025 5:24:00 PM D:\REVIT LOCAL\BPP_PS8_R24_CD_anjaliattie.rvt
© ANJALI GRANT DESIGN LLC ORIGINAL SHEET SIZE: 24" X 36"

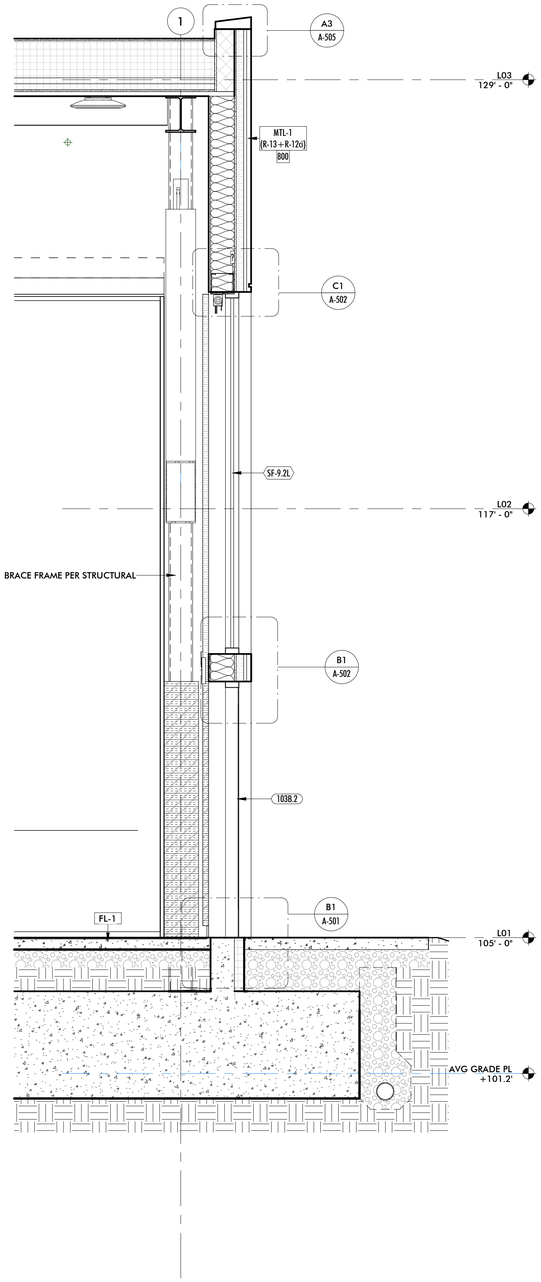

4 WALL SECTION AT MP ROOM EAST WALL
1/2" = 1'-0"

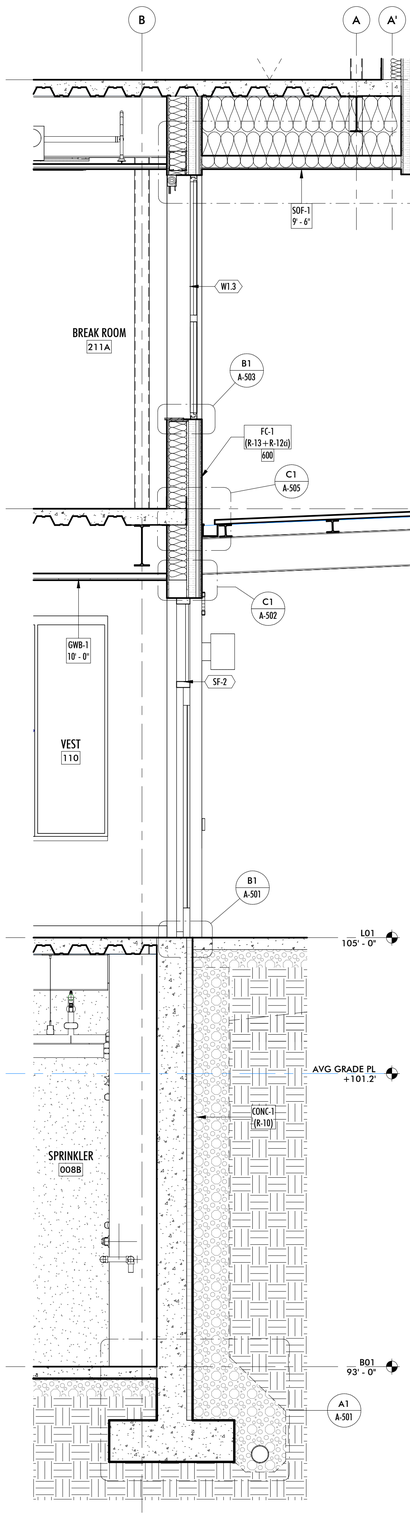

3 WALL SECTION AT ENTRY
1/2" = 1'-0"

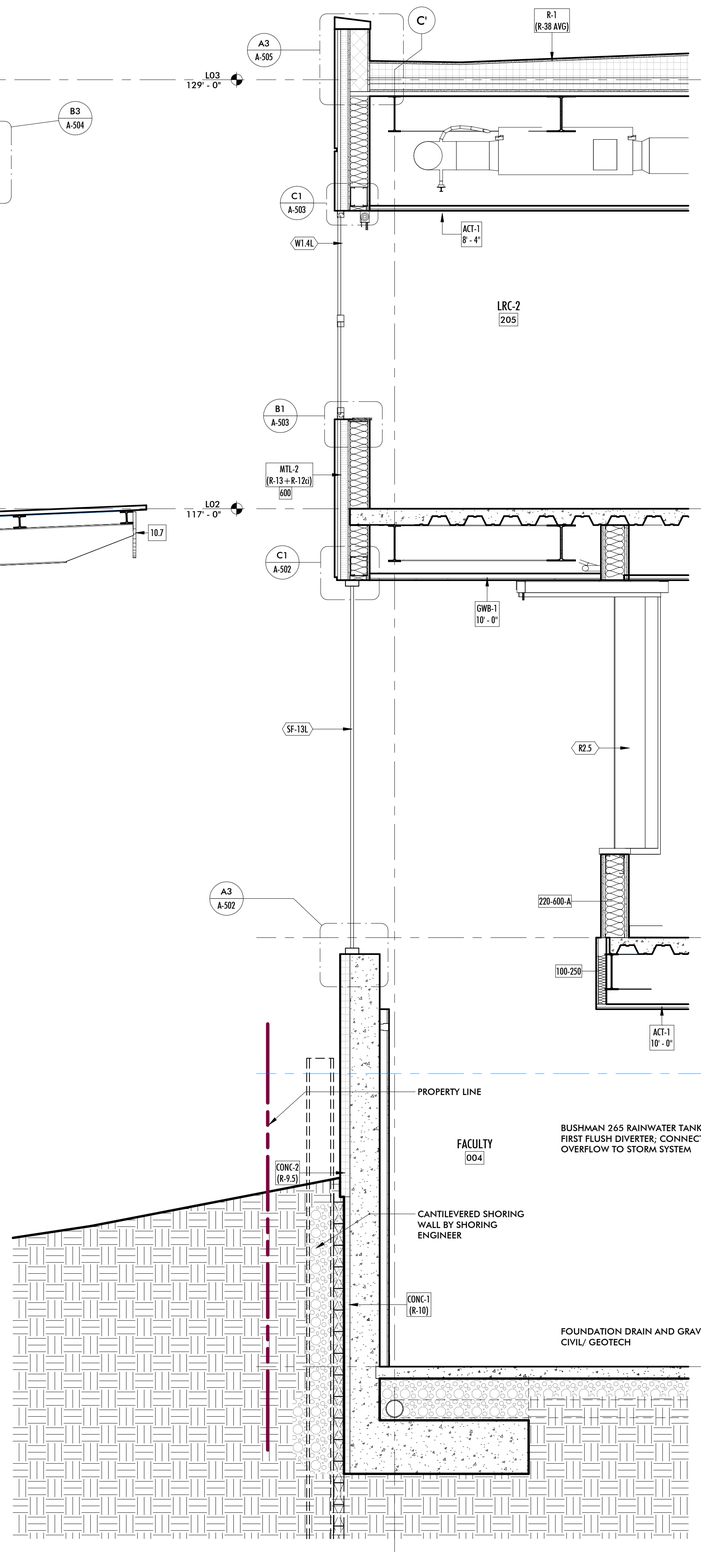

2 WALL SECTION AT FACULTY
1/2" = 1'-0"

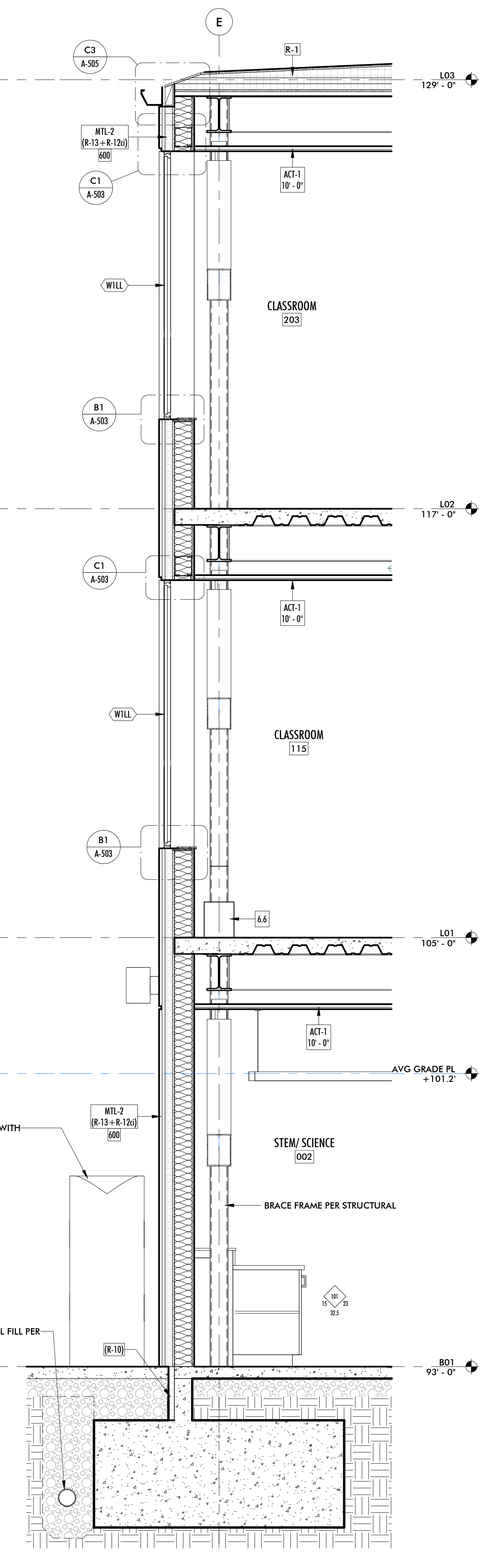

1 SECTION AT SCIENCE ROOM N
1/2" = 1'-0"

3427 BEACON AVE S
SEATTLE 98144
ANJALI@AGRANTDESIGN.COM
206-512-4209

anjali grant design LLC

3700 E MERCER WAY
BARNABIE POINT PROJECT

NO.	DATE	DESCRIPTION

4 JUNE 2025
BUILDING PERMIT

PROJECT:

WALL SECTIONS

A-350

12/12/2025 5:24:07 PM D:\REVIT LOCAL\BPP_PSB_R24_CD_anjaleattle.rvt
© ANJALI GRANT DESIGN LLC ORIGINAL SHEET SIZE: 24" X 36"

12/12/2025 5:24:13 PM D:\REVIT LOCAL\BPP_PSB_R24_CD_anjaseattle.rvt
© ANJALI GRANT DESIGN LLC ORIGINAL SHEET SIZE: 24" X 36"

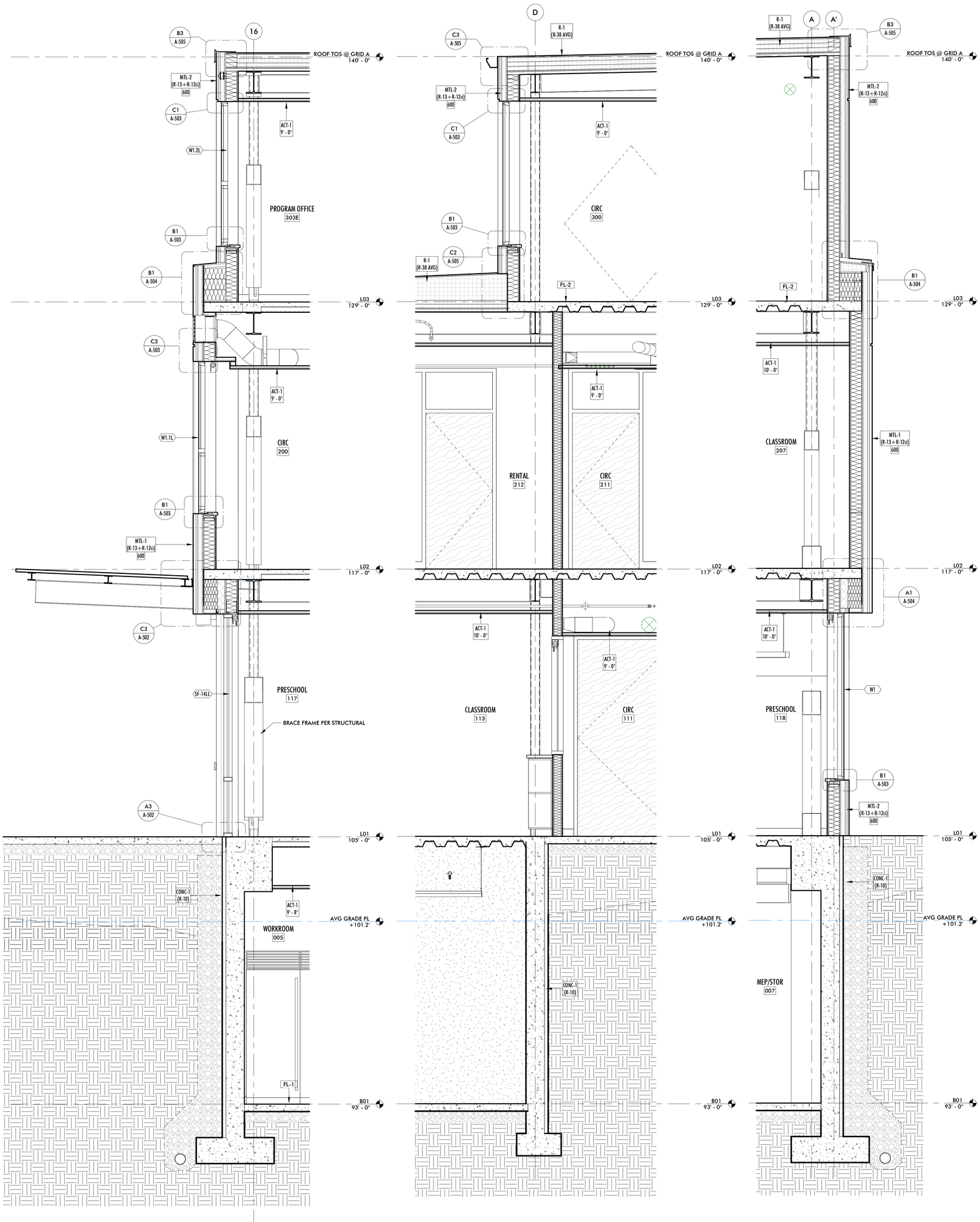

1 WALL SECTION AT GRID 16
1/2" = 1'-0"

2 WALL SECTION AT GRID D
1/2" = 1'-0"

3 WALL SECTION AT GRID A
1/2" = 1'-0"

A-351

WALL SECTIONS

PROJECT:

NO.	DATE	DESCRIPTION
	4 JUNE 2025	BUILDING PERMIT

3700 E MERCER WAY
BARNABIE POINT PROJECT

anjali grant design LLC
3407 BEACON AVE S
SEATTLE 98144
ANJALI@ANJALIGRANTDESIGN.COM
206-512-4269

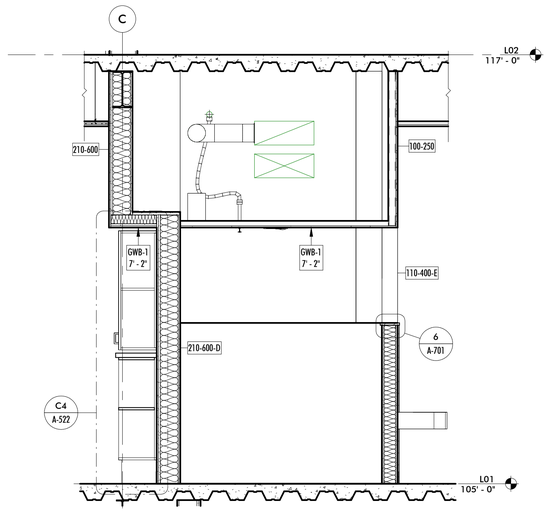

3 INT WALL SECTION AT PS TOILETS
600
1/2" = 1'-0"

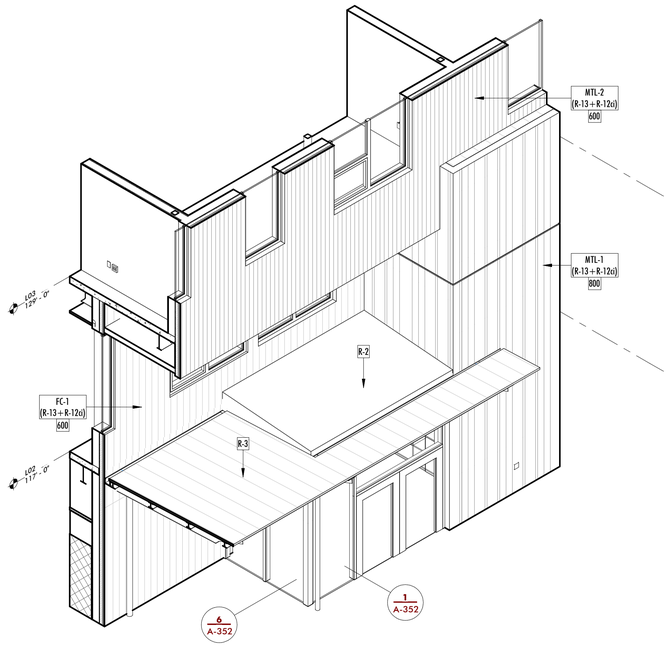

4 AXON AT CHAPEL ENTRY

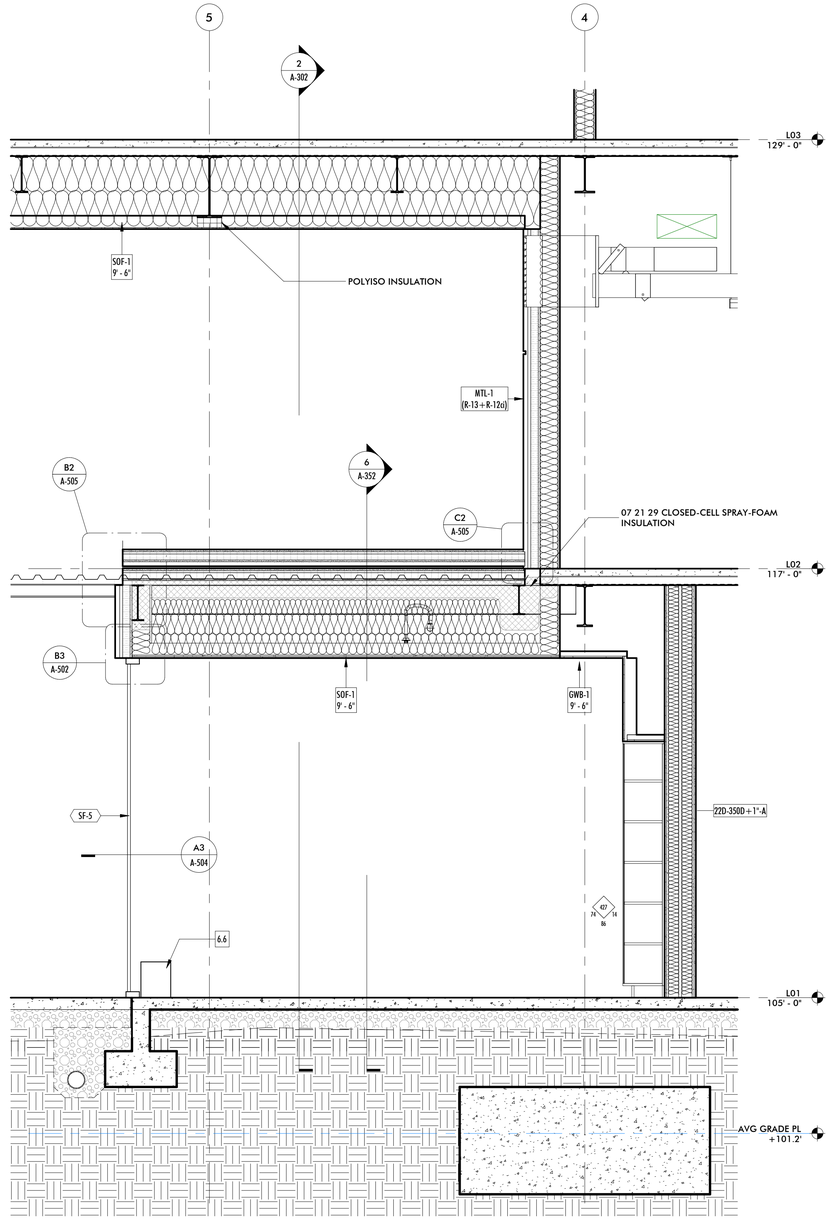

1 PARTIAL WALL SECTION AT CHAPEL ENTRY
1/2" = 1'-0"

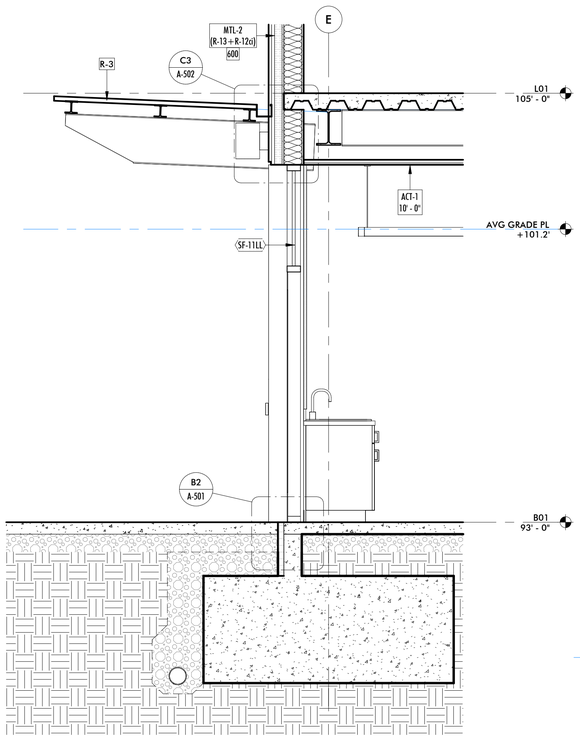

2 PARTIAL WALL SECTION AT SCIENCE CANOPY
1/2" = 1'-0"

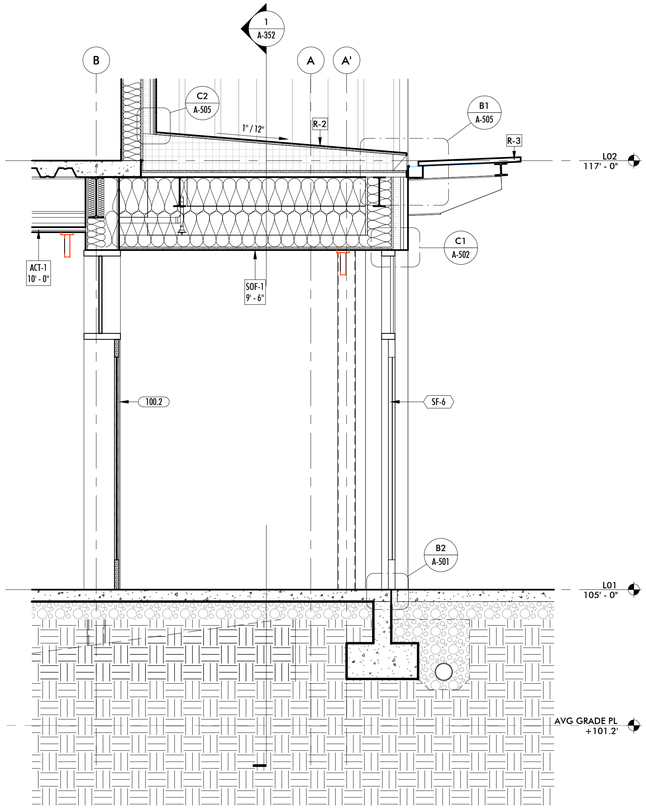

6 CHAPEL ENTRY
1/2" = 1'-0"

3427 BEACON AVE S
SEATTLE 98144
ANJALI@AGRANTDESIGN.COM
206-512-4209

anjali grant design LLC

3700 E MERCER WAY
BARNABIE POINT PROJECT

NO.	DATE	DESCRIPTION
	4 JUNE 2025	BUILDING PERMIT

PROJECT:

WALL SECTIONS

A-352

12/15/2025 11:36:38 AM C:\Users\Eamon\Documents\BIP_P26_R24_CD_eamon786596.rvt
© ANJALI GRANT DESIGN LLC ORIGINAL SHEET SIZE: 24" X 36"

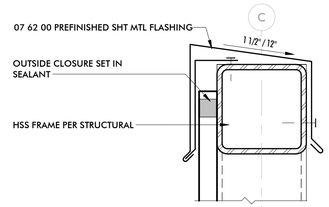

12 MECH SCREEN EDGE DTL
3" = 1'-0"

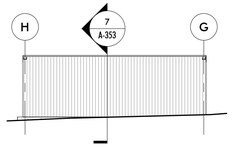

11 TRASH ENCLOSURE W
1/8" = 1'-0"

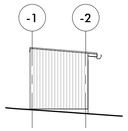

10 TRASH ENCLOSURE S
1/8" = 1'-0"

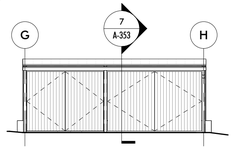

9 TRASH ENCLOSURE E
1/8" = 1'-0"

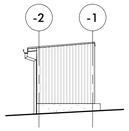

8 TRASH ENCLOSURE N
1/8" = 1'-0"

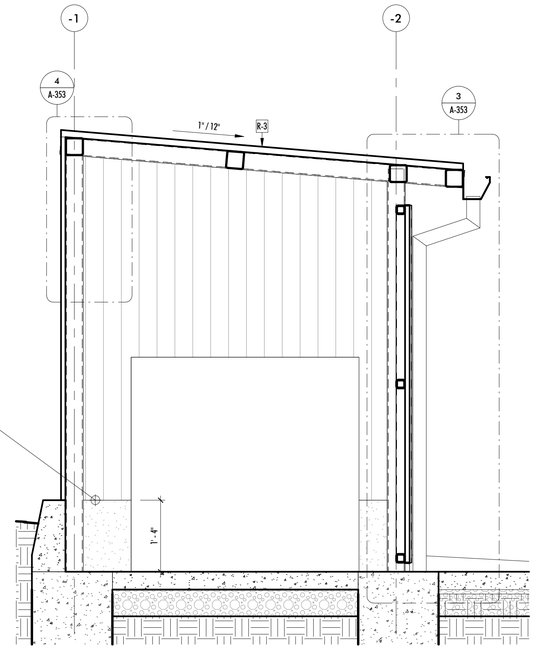

7 TRASH ENCLOSURE EW SECTION
3/4" = 1'-0"

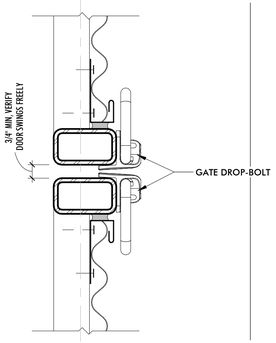

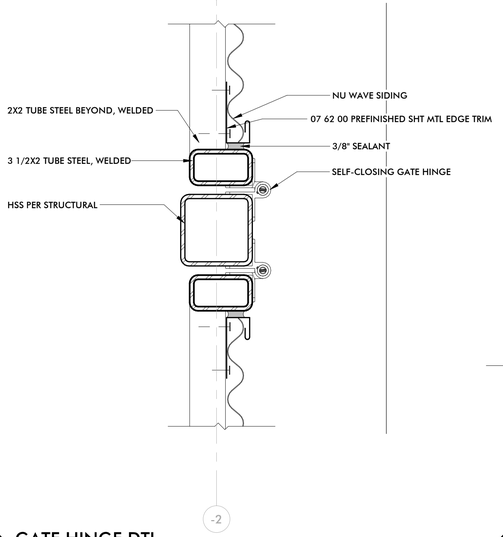

6 GATE HINGE DTL
3" = 1'-0"

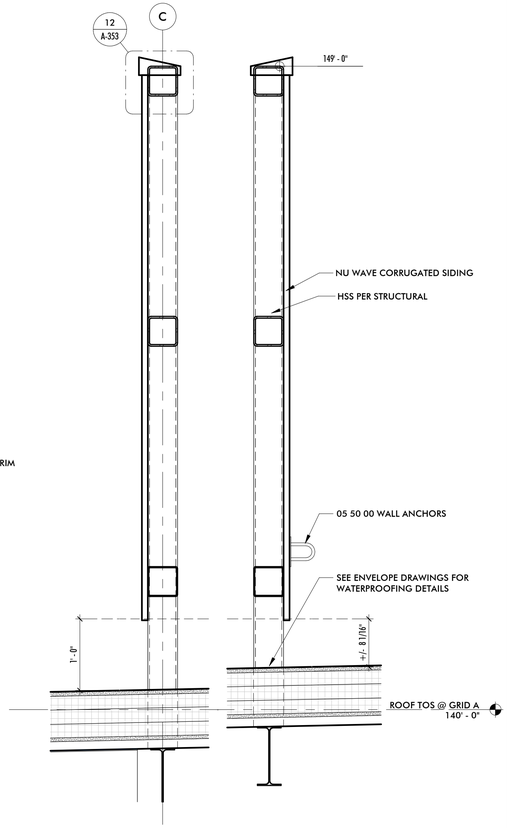

5 MECHANICAL SCREEN
1" = 1'-0"

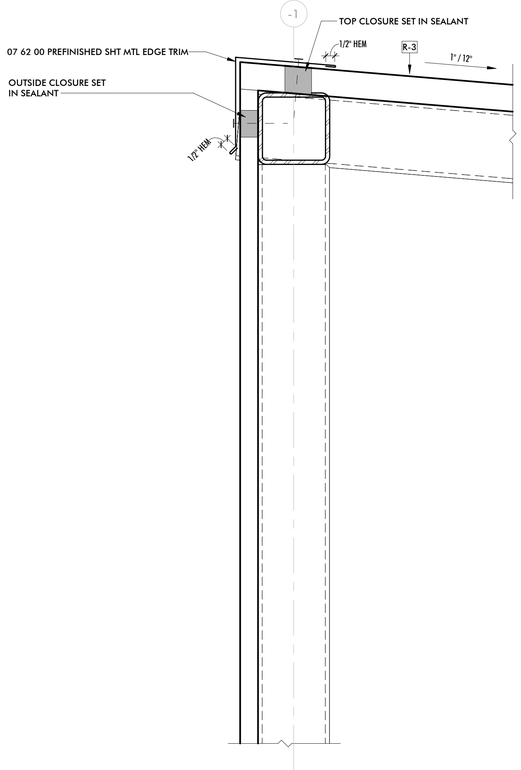

4 ROOF EDGE AT TRASH ENCLOSURE
3" = 1'-0"

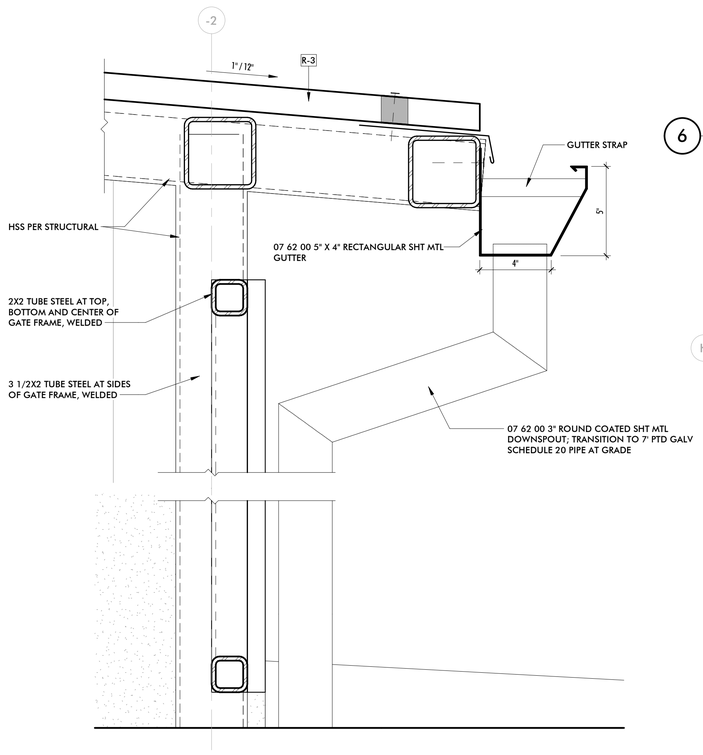

3 GATE HEAD/SILL AT TRASH ENCLOSURE
3" = 1'-0"

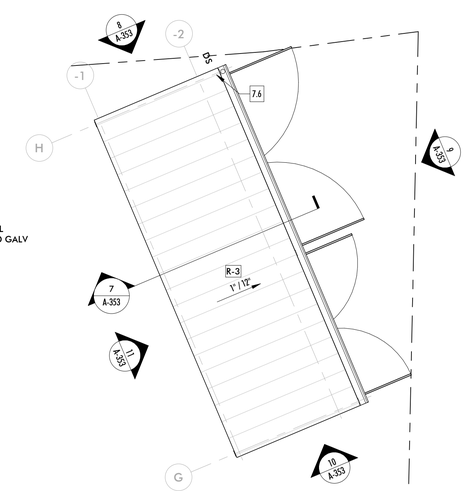

2 TRASH ENCLOSURE ROOF PLAN
1/4" = 1'-0"

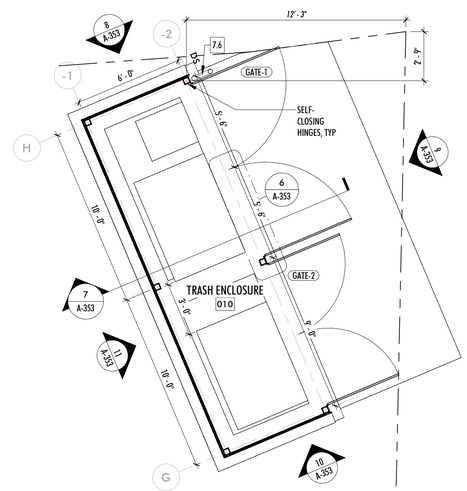

1 TRASH ENCLOSURE
1/4" = 1'-0"

anjali grant design LLC
3427 BEACON AVE S
SEATTLE 98144
ANJALI@AGRANTDESIGN.COM
206-512-4209

3700 E MERCER WAY
BARNABIE POINT PROJECT

NO.	DATE	DESCRIPTION
	4 JUNE 2025	BUILDING PERMIT

PROJECT:

TRASH ENCLOSURE & MECHANICAL SCREEN

A-353

12/15/2025 11:36:43 AM C:\Users\EJaha\Documents\@PP_PSB_R24_CD_eahaXTBSOR.rvt
© ANJALI GRANT DESIGN LLC ORIGINAL SHEET SIZE: 24" X 36"

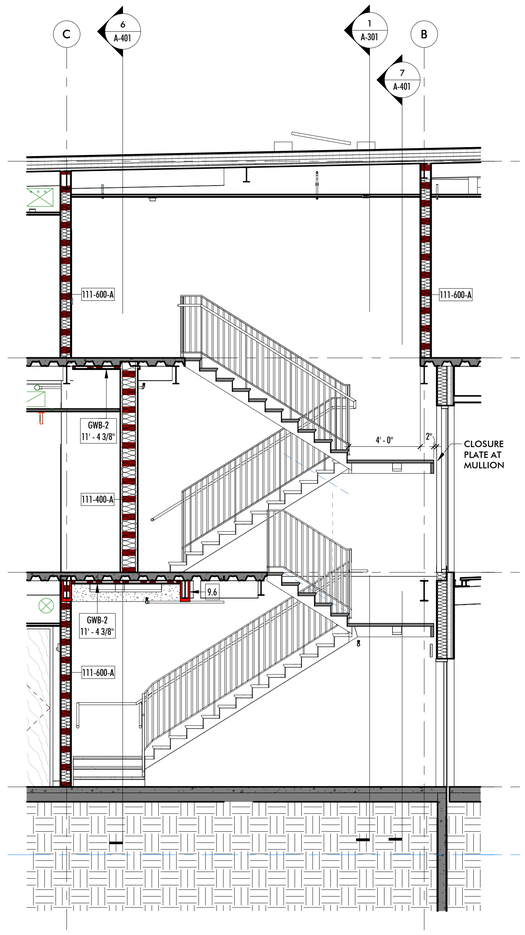

9 SE STAIR N-S WEST RUN
1/4" = 1'-0"

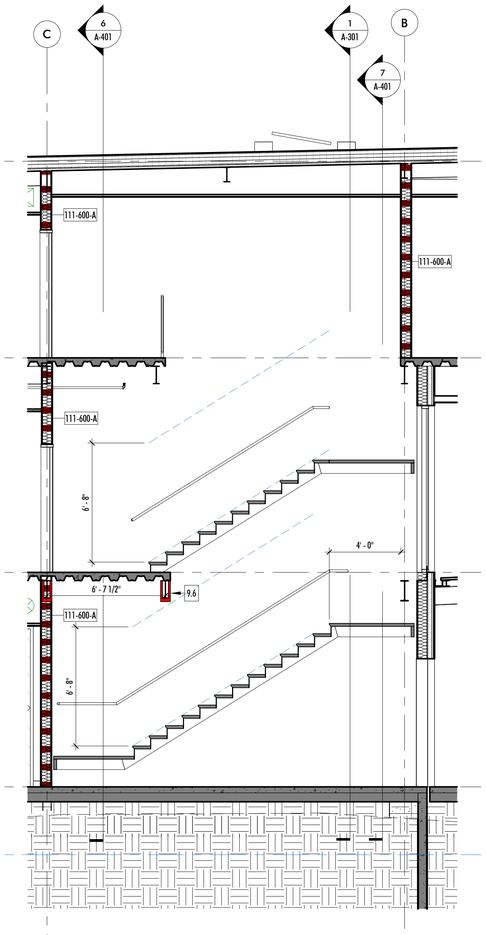

8 SE STAIR N-S EAST RUN
1/4" = 1'-0"

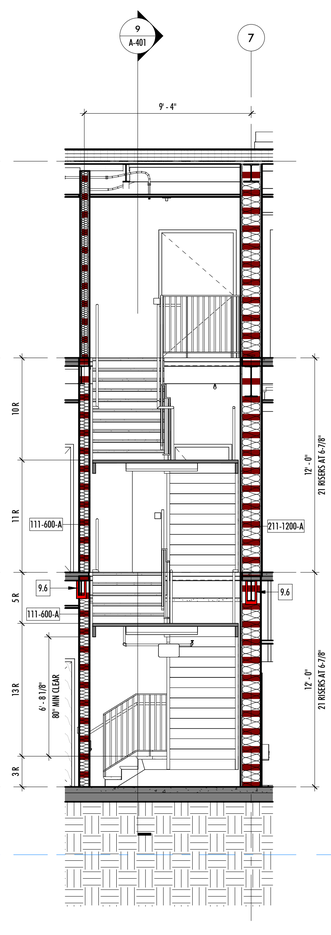

7 SE STAIR E-W SOUTH LANDING
1/4" = 1'-0"

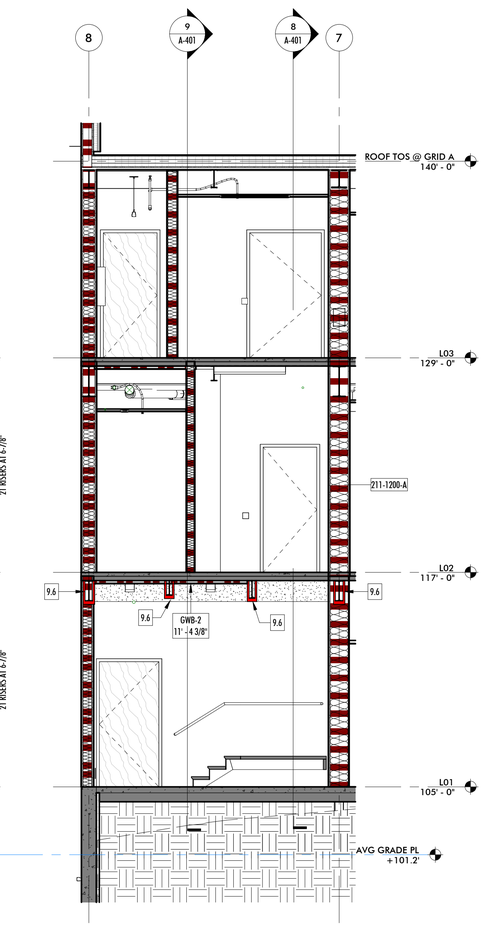

6 SE STAIR E-W NORTH LANDING
1/4" = 1'-0"

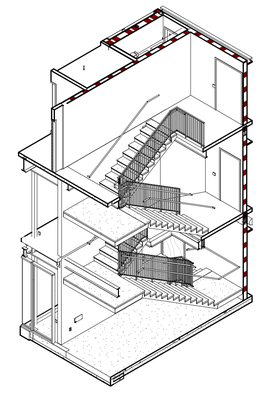

5 SE STAIR AXON

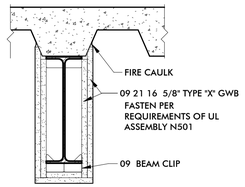

4 UL ASSEMBLY N501 2HR
1 1/2" = 1'-0"

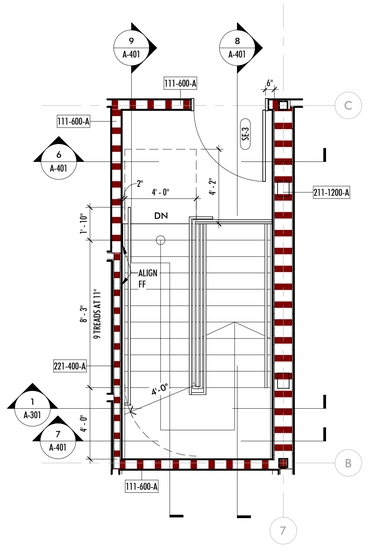

3 EAST STAIR LEVEL 03
1/4" = 1'-0"

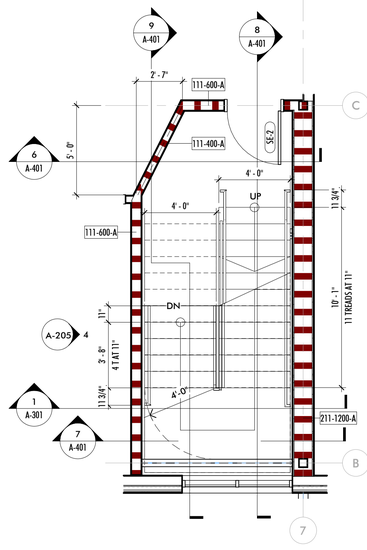

2 EAST STAIR LEVEL 02
1/4" = 1'-0"

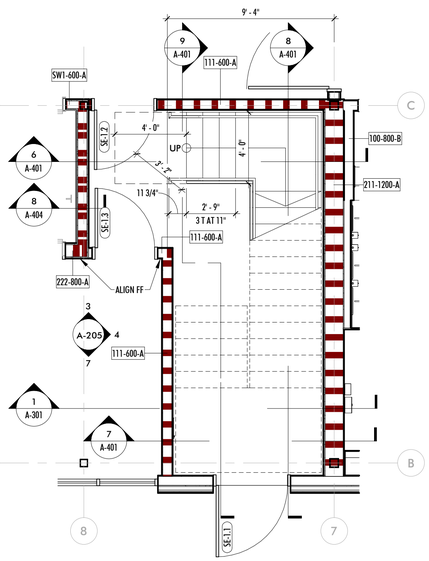

1 EAST STAIR LEVEL 01
1/4" = 1'-0"

PROVIDE EGRESS PATH MARKINGS PER WSBC 1025.2.1 THROUGH 1025.2.6.3

STAIR TREADS MUST BE NON SLIP PER WAC 246-336-050 (3)

FIRE ASSEMBLY LEGEND

2 HOUR RATED ASSEMBLY

1 HOUR RATED ASSEMBLY

KEYNOTES	
	Keynote Text
9.6	UL N501 2 HOUR RATED BEAM ENCLOSURE

3427 BEACON AVE S
SEATTLE 98144
ANJALI@AGRANTDESIGN.COM
206-512-4209

anjali grant design LLC

3700 E MERCER WAY
BARNABIE POINT PROJECT

NO.	DATE	DESCRIPTION
	4 JUNE 2025	BUILDING PERMIT

PROJECT:

STAIRS

A-401

12/15/2025 1:10:38 PM D:\REVIT LOCAL\BPP_PSB_RQ4_CD_anjaleattle.rvt
© ANJALI GRANT DESIGN LLC ORIGINAL SHEET SIZE: 24" X 36"

PROVIDE EGRESS PATH MARKINGS PER WSBC 1025.2.1 THROUGH 1025.2.6.3

STAIR TREADS MUST BE NON SLIP PER WAC 246-336-050 (3)

FIRE ASSEMBLY LEGEND

2 HOUR RATED ASSEMBLY

1 HOUR RATED ASSEMBLY

KEYNOTES	
	Keynote Text
9.6	UL N501 2 HOUR RATED BEAM ENCLOSURE
10.21	10 44 00 SEMI-RECESSED FIRE EXTINGUISHER CABINET
10.22	BARRIER GATE, PROVIDE SOLID BLOCKING IN WALL
21.1	CLASS 1 STANDPIPE
32.3	7' HIGH CHAINLINK FENCE PARTITION

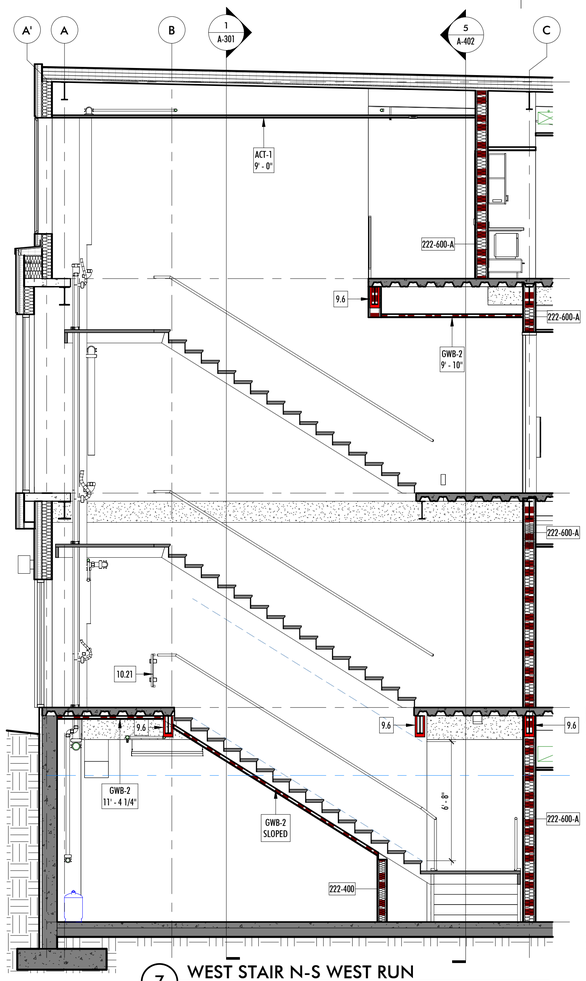

7 WEST STAIR N-S WEST RUN
1/4" = 1'-0"

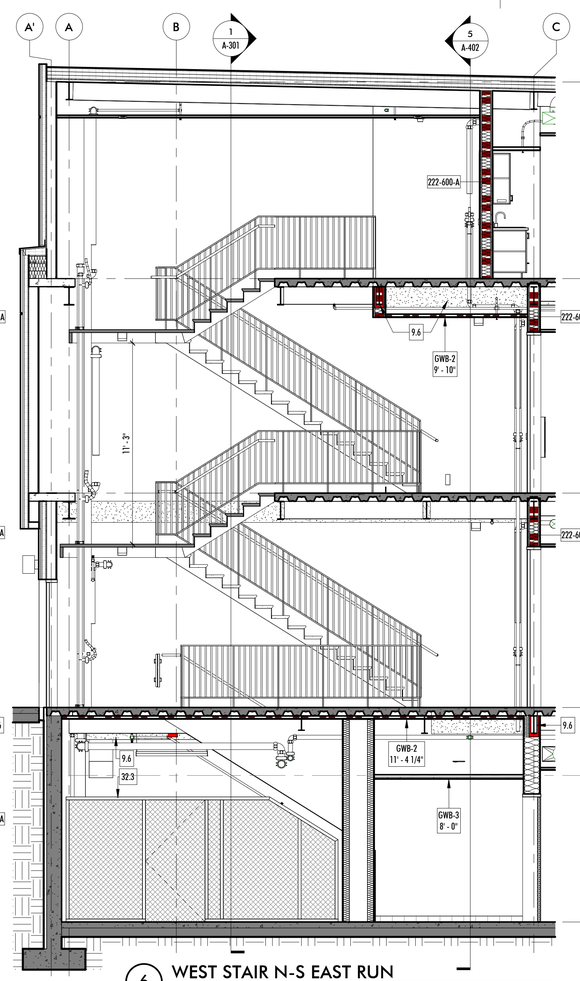

6 WEST STAIR N-S EAST RUN
1/4" = 1'-0"

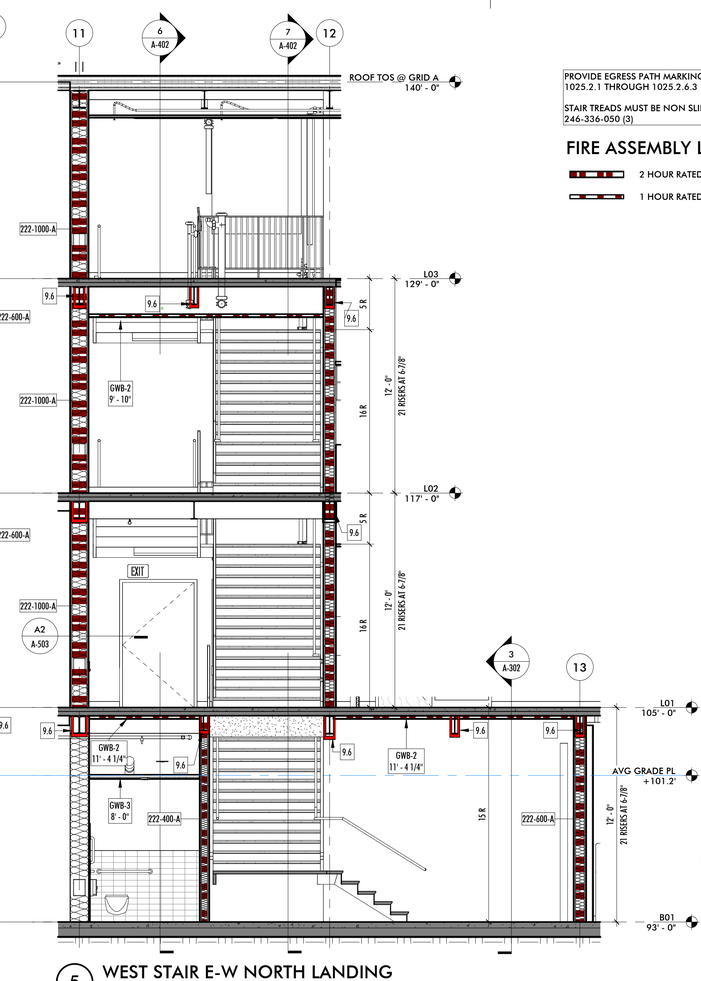

5 WEST STAIR E-W NORTH LANDING
1/4" = 1'-0"

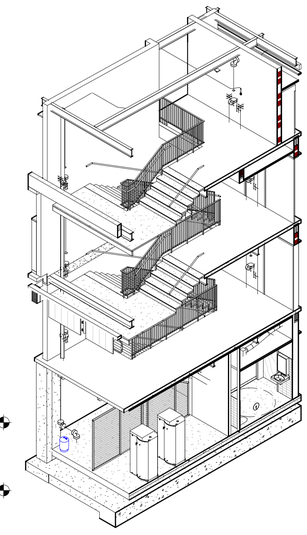

8 SW STAIR AXON

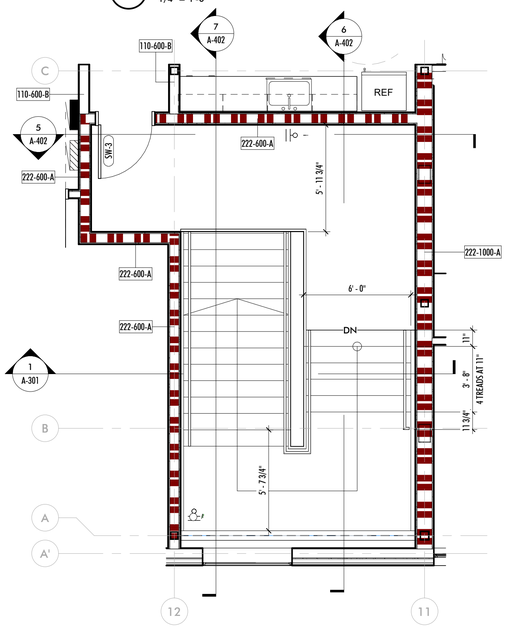

4 WEST STAIR LEVEL 03
1/4" = 1'-0"

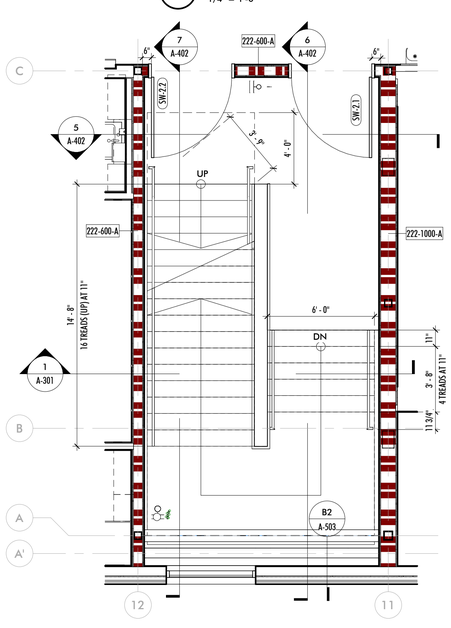

3 WEST STAIR LEVEL 02
1/4" = 1'-0"

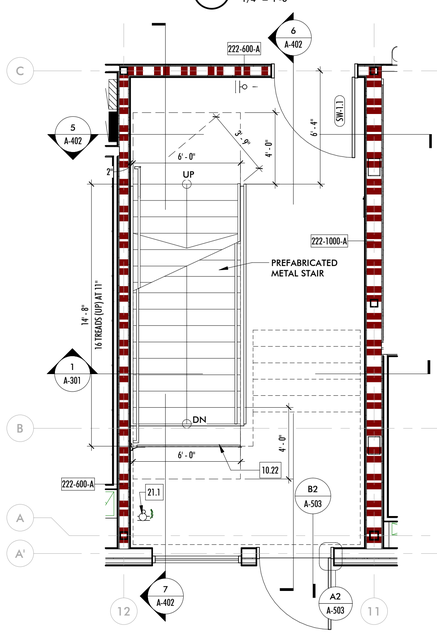

2 WEST STAIR LEVEL 01
1/4" = 1'-0"

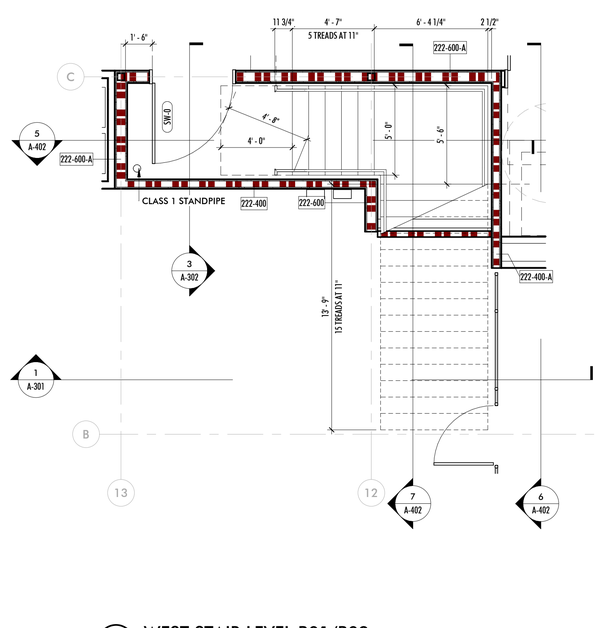

1 WEST STAIR LEVEL B01/B02
1/4" = 1'-0"

3427 BEACON AVE S
SEATTLE 98144
ANJALI@AGRANTDESIGN.COM
206-512-4209

anjali grant design LLC

3700 E MERCER WAY
BARNABIE POINT PROJECT

NO.	DATE	DESCRIPTION
	4 JUNE 2025	BUILDING PERMIT

PROJECT:

STAIRS

A-402

12/15/2025 1:31:52 PM C:\Users\Eashan\Documents\@PP_PSB_R24_CD_eashanTBSOR.rvt
© ANJALI GRANT DESIGN LLC ORIGINAL SHEET SIZE: 24" X 36"

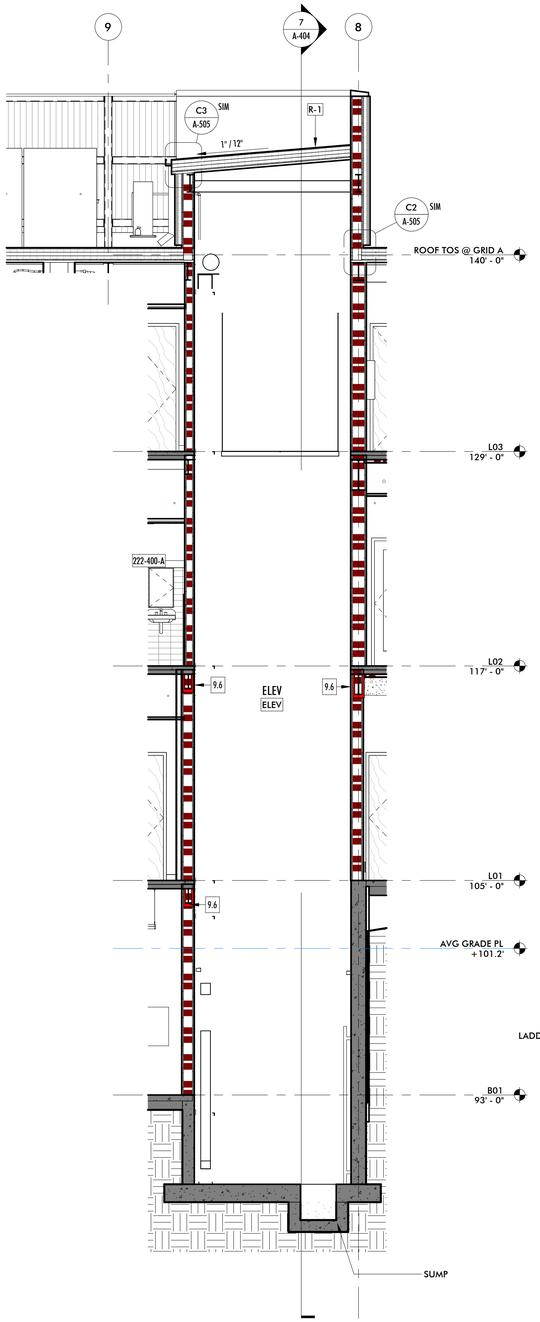

8 ELEVATOR E-W
1/4" = 1'-0"

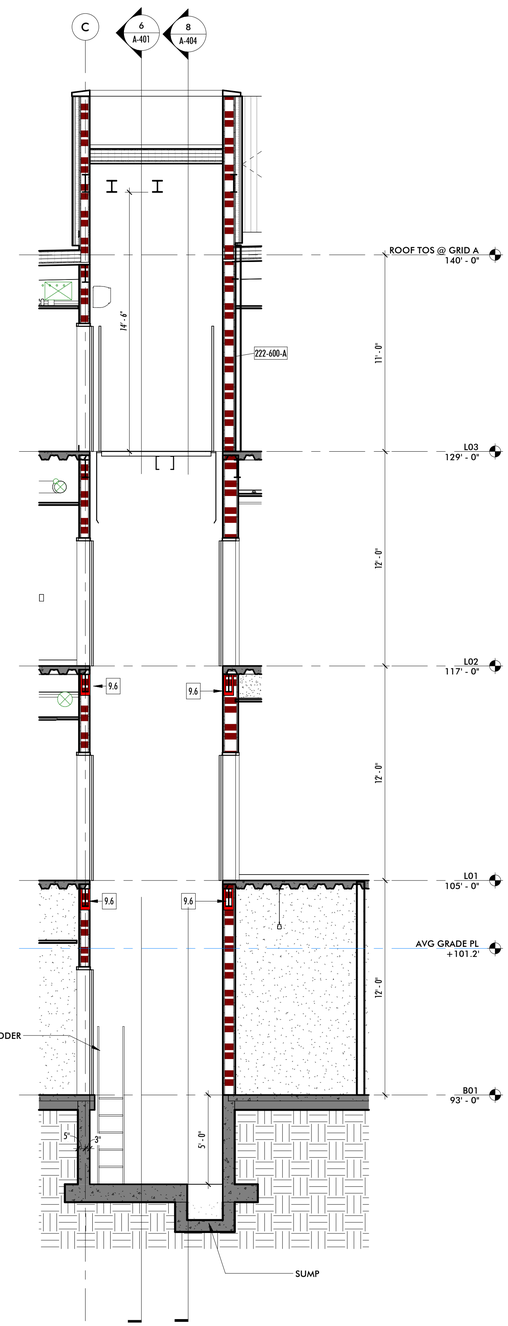

7 ELEVATOR N-S
1/4" = 1'-0"

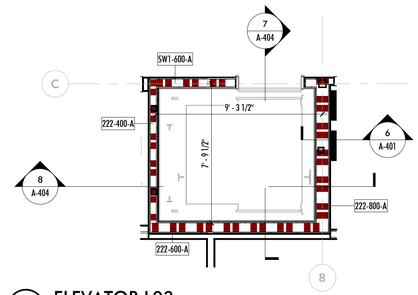

6 ELEVATOR L03
1/4" = 1'-0"

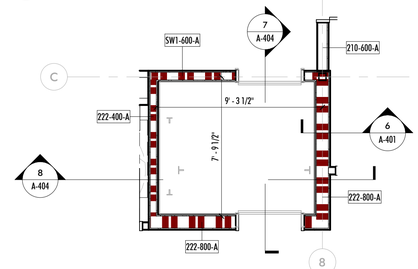

5 ELEVATOR L02
1/4" = 1'-0"

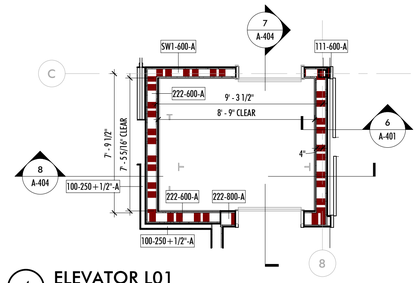

4 ELEVATOR L01
1/4" = 1'-0"

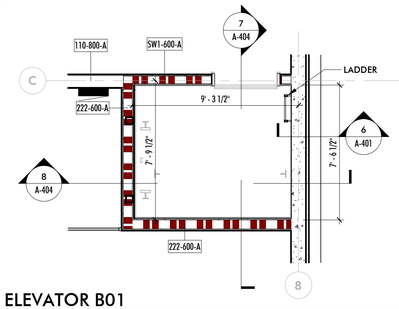

3 ELEVATOR B01
1/4" = 1'-0"

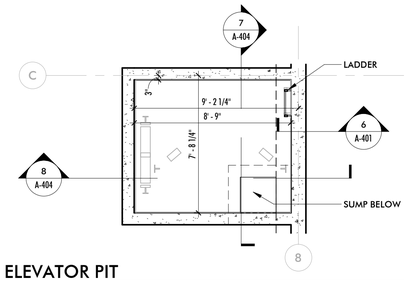

2 ELEVATOR PIT
1/4" = 1'-0"

2 HOUR RATED ASSEMBLY

1 HOUR RATED ASSEMBLY

FIRE ASSEMBLY LEGEND
1/8" = 1'-0"

ELEVATOR NOTES
1. ASME A17.1/CSA B44 SECTION 2.8. PIPES, DUCTS, CONDUITS, AND EQUIPMENT NOT USED FOR THE OPERATION OF THE ELEVATORS ARE PROHIBITED IN HOISTWAYS.
2. ASME RULE 2.2.2. WATERPROOF AS NECESSARY TO PREVENT ENTRY OF GROUND WATER. SUMP PUMPS MAY BE INSTALLED FOR FLOOD CONTROL BUT NOT APPROVED TO MAINTAIN A DRY PIT.
3. ASME RULE 2.2.4. PROVIDE PIT LADDER.
4. COMPLY WITH SEISMIC REQUIREMENTS.
5. ACCOMMODATE PEOPLE WITH DISABILITIES.
6. ASME SECTION 2.4 AND 3.4. PROVIDE PROPER TOP CAR RUNBYS, CLEARANCES AND REFUGE SPACE.
7. ASME RULE 2.1.1.2 AND 2.11.14. GROUT ALL MASONRY JAMBS AND HEADERS TO RETAIN FIRE RATING OF HOISTWAY. IN OTHER THAN MASONRY, PROVIDE LABELED ENTRANCE ASSEMBLIES INSTALLED AS TESTED.
8. PROVIDE CALCULATIONS AND DRAWINGS TO SDCI FOR APPROVAL OF THE STRESSES AS NOTED IN THE APPLICABLE RULES OF ASME SECTION 2.9.
9. PROVIDE CALCULATIONS FOR APPROVAL OF THE ABILITY OF THE PIT FLOOR AND STRUCTURE TO WITHSTAND THE ELEVATOR BUFFER ENGAGEMENT REACTIONS.
10. ASME 2.27.1. PROVIDE MEANS OF TWO-WAY CONVERSATION BETWEEN EACH ELEVATOR AND A READILY ACCESSIBLE POINT (MAIN ELEVATOR LOBBY) OUTSIDE THE HOISTWAY.
11. ASME 2.27.1.1.2 THIS STRUCTURE IS CONSIDERED AS UNATTENDED, AND AN ADDITIONAL EMERGENCY SIGNALING DEVICES SHALL BE PROVIDED (PHONE TO ANSWERING SERVICE).
12. ASME 2.27.1.1.5 PROVIDE AN EMERGENCY POWER SUPPLY FOR THE DEVICES REQUIRED BY 2.27.1 THE SUPPLY SHALL BE CAPABLE OF OPERATING THE AUDIBLE DEVICE FOR AT LEAST ONE HOUR AND THE MEANS OF A TWO-WAY CONVERSATION FOR AT LEAST FOUR HOURS.
13. COMPLY WITH APPLICABLE CODES.

PIT LADDER SHALL:
1. BE NONCOMBUSTIBLE.
2. BE LOCATED (6 IN.) FROM FRONT OF HOISTWAY AT LOWEST LANDING.
3. EXTEND NOT LESS THAN (48 IN.) ABOVE THE SILL OF THE ACCESS DOOR OR HAND GRIPS SHALL BE PROVIDED.
4. HAVE RUNGS, CLEATS, OR STEPS THAT ARE AT LEAST (16 IN.) WIDE UNLESS "UNAVOIDABLE OBSTRUCTIONS ARE ENCOUNTERED."
5. HAVE THE RUNGS, CLEATS, OR STEPS SPACED (12 IN.) ON CENTER.
6. HAVE A CLEAR DISTANCE OF (4.5 IN.) FROM THE CENTERLINE OF THE RUNGS, CLEATS, OR STEPS TO THE WALL OF THE HOISTWAY.
7. IF PROVIDED WITH SIDERAILS, HAVE NOT LESS THAN (4.5 IN.) OF CLEARANCE FROM THE CENTERLINE OF THE SIDERAILS TO THE NEAREST PERMANENT OBJECT.
8. BE ABLE TO SUSTAIN A LOAD OF 300LBS MINIMUM.

KEYNOTES	
	Keynote Text
9.6	UL N501 2 HOUR RATED BEAM ENCLOSURE

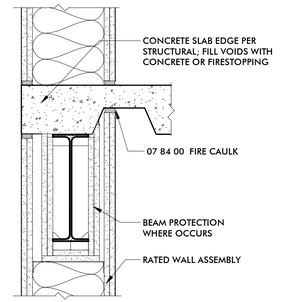

1 RATED WALL AT OPENING
1 1/2" = 1'-0"

anjali grant design LLC
3427 BEACON AVE S
SEATTLE 98144
ANJALI@AGRANTDESIGN.COM
206-512-4209

3700 E MERCER WAY
BARNABIE POINT PROJECT

NO.	DATE	DESCRIPTION
	4 JUNE 2025	BUILDING PERMIT

PROJECT:

ELEVATOR

A-404

12/15/2025 11:37:02 AM C:\Users\Anjali\Desktop\Documents\BIP_PSB_R24_CD_wallsTBS06.rvt
© ANJALI GRANT DESIGN LLC ORIGINAL SHEET SIZE: 24" X 36"

WALL FINISH LEGEND

CERAMIC TILE 1	10 11 23 TACKBOARD
CERAMIC TILE 2	FIBER REINFORCED LAMINATE

KEYNOTES

	Keynote Text
9.3	FRL
10.19	10 28 00 MIRROR 18" X 30"
10.27	10 28 00 RECESSED MEDICINE CABINET
10.30	10 28 00 SEAT COVER DISPENSER AT B01, L02 STUDENT STALLS
10.31	10 28 00 SURFACE-MTD MEDICINE CABINET

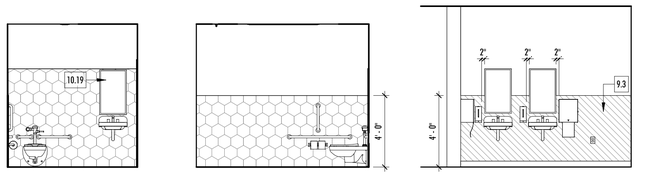

20 WEST 1/4" = 1'-0"

19 111C SOUTH 1/4" = 1'-0"

18 L01 STUDENT TLTS E 1/4" = 1'-0"

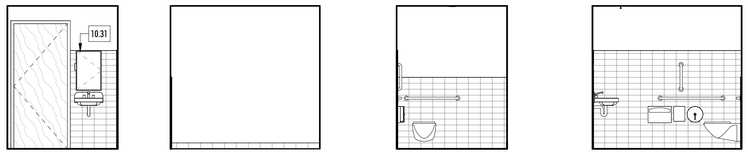

16 NORTH 1/4" = 1'-0"

15 WEST 1/4" = 1'-0"

14 SOUTH 1/4" = 1'-0"

13 EAST ADULT TLT 009 1/4" = 1'-0"

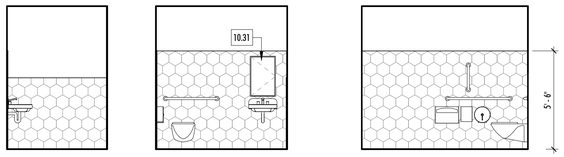

12 NORTH 1/4" = 1'-0"

11 WEST 1/4" = 1'-0"

10 STUDENT ADA STALL TYP S 1/4" = 1'-0"

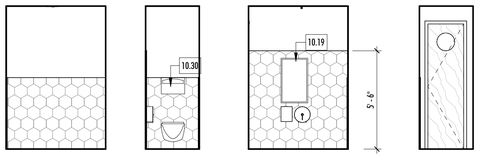

8 NORTH 1/4" = 1'-0"

7 WEST 1/4" = 1'-0"

6 SOUTH 1/4" = 1'-0"

5 STUDENT STALL TYP E 1/4" = 1'-0"

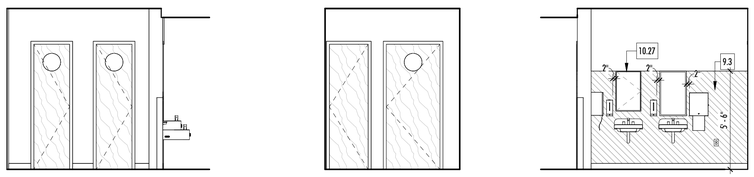

4 B01 STUDENT TLTS W 1/4" = 1'-0"

3 B01 STUDENT TLTS S 1/4" = 1'-0"

2 B01 STUDENT TLTS E 1/4" = 1'-0"

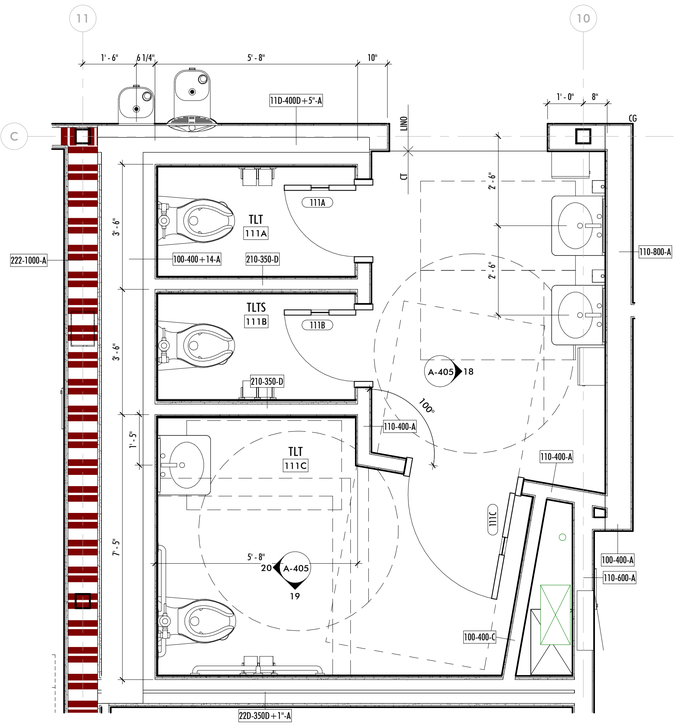

17 TLTS 111A-111C 1/2" = 1'-0"

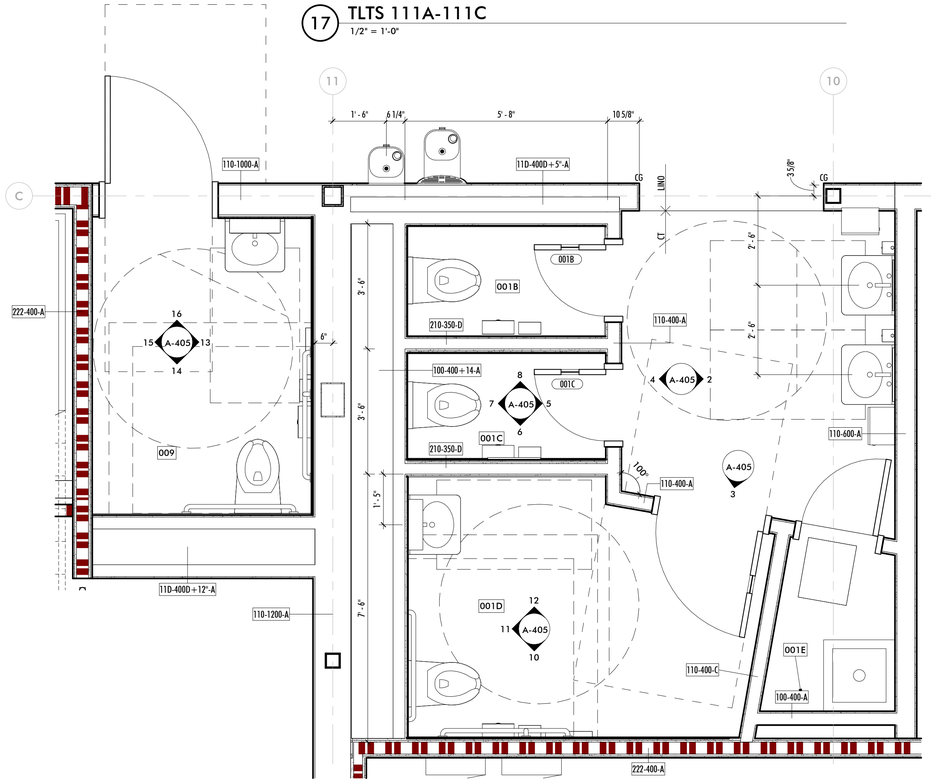

1 TLTS 001B-001D 1/2" = 1'-0"

3427 BEACON AVE S
SEATTLE 98144
ANJALI@AGRANTDESIGN.COM
206-512-4209

anjali grant design LLC

3700 E MERCER WAY
BARNABIE POINT PROJECT

NO.	DATE	DESCRIPTION

4 JUNE 2025
BUILDING PERMIT

PROJECT:

RESTROOMS

A-405

12/15/2025 11:37:11 AM C:\Users\Easha\Yadav\Documents\BPP_PS8_R24_CD_eashaTBS5R.rvt
© ANJALI GRANT DESIGN LLC ORIGINAL SHEET SIZE: 24" X 36"

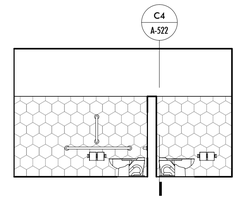

16 TLT 118A-B NORTH
1/4" = 1'-0"

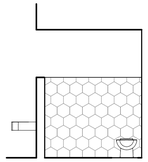

15 TLT 118A WEST
1/4" = 1'-0"

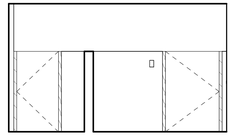

14 TLT 118A-B SOUTH
1/4" = 1'-0"

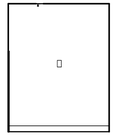

13 TLT 118A EAST
1/4" = 1'-0"

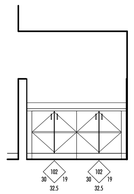

12 TLTS 118B WEST
1/4" = 1'-0"

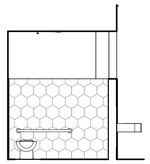

11 TLTS 118B EAST
1/4" = 1'-0"

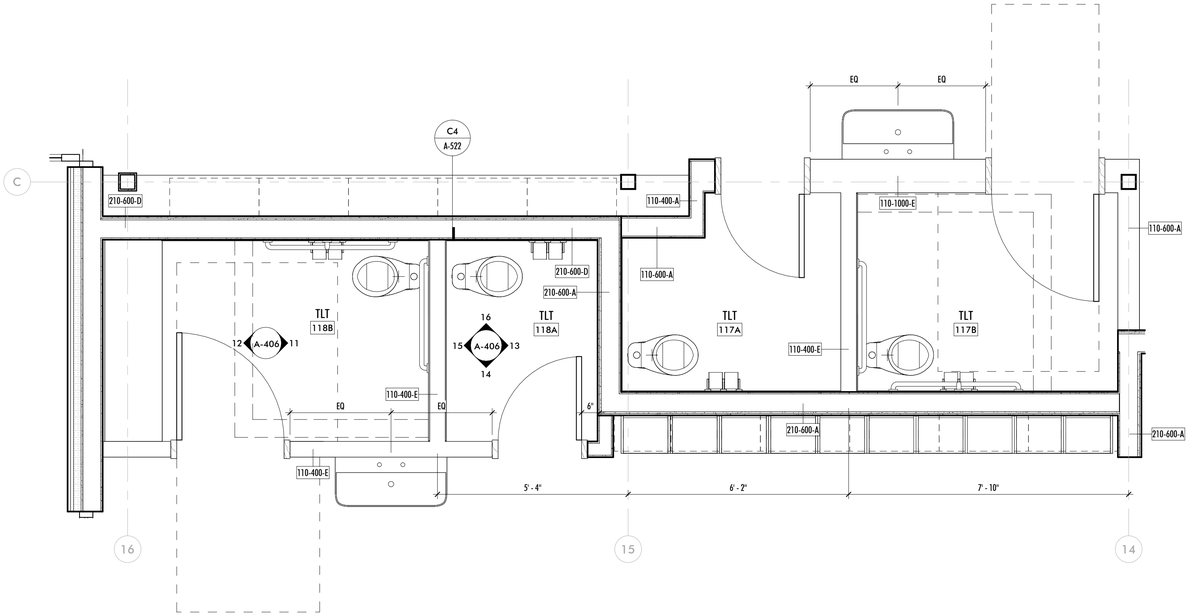

10 TLTS 117A-B, 118A-B
1/2" = 1'-0"

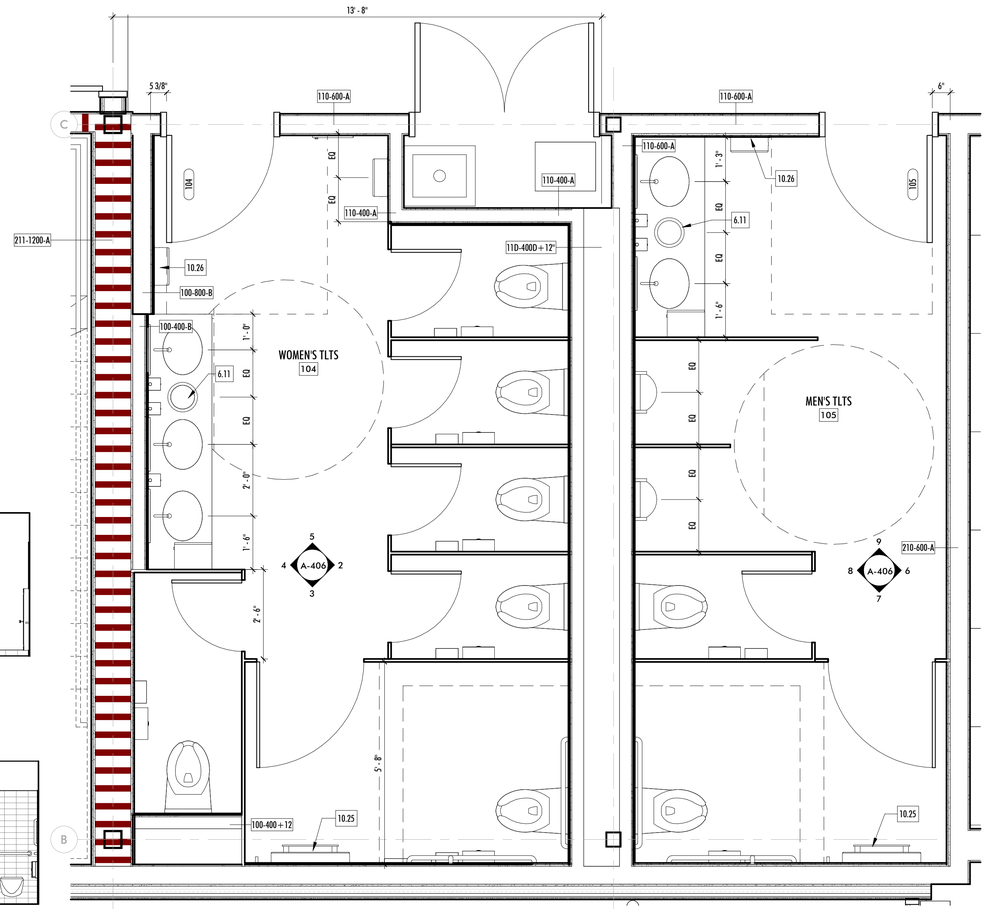

1 TLTS 104, 105
1/2" = 1'-0"

WALL FINISH LEGEND

CERAMIC TILE 1	10 11 23 TACKBOARD
CERAMIC TILE 2	FIBER REINFORCED LAMINATE

KEYNOTES

	Keynote Text
6.11	06 41 16 8" SS TRASH RING
10.19	10 28 00 MIRROR 18" X 30"
10.25	10 28 00 SURFACE-MOUNTED CHANGING TABLE
10.26	10 28 00 SEMI-RECESSED PT DISPENSER
10.27	10 28 00 RECESSED MEDICINE CABINET

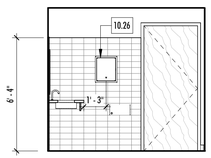

9 NORTH
1/4" = 1'-0"

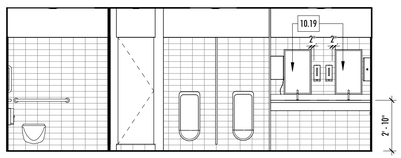

8 WEST
1/4" = 1'-0"

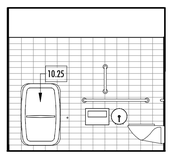

7 SOUTH
1/4" = 1'-0"

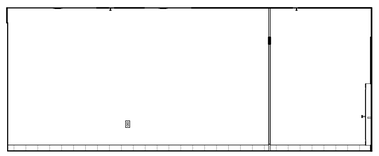

6 EAST TLTS 105
1/4" = 1'-0"

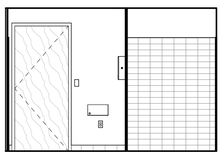

5 NORTH
1/4" = 1'-0"

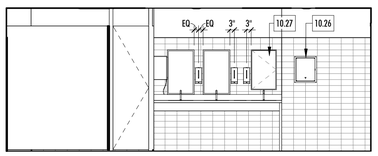

4 WEST
1/4" = 1'-0"

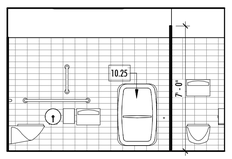

3 SOUTH
1/4" = 1'-0"

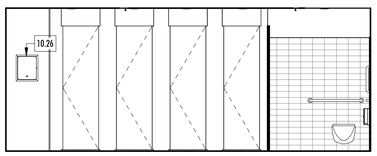

2 EAST TLTS 104
1/4" = 1'-0"

3427 BEACON AVE S
SEATTLE 98144
ANJALI@AGRANTDESIGN.COM
206-512-4209
anjali grant design LLC

3700 E MERCER WAY
BARNABIE POINT PROJECT

NO.	DATE	DESCRIPTION
	4 JUNE 2025	BUILDING PERMIT

PROJECT:

RESTROOMS

A-406

12/15/2025 11:37:19 AM C:\Users\Anjali\Yadav\Documents\BIM\P_PSB_R24_CD_easlaT8S9R.rvt
© ANJALI GRANT DESIGN LLC
CMGN44, SHEET SIZE: 24" X 36"

WALL FINISH LEGEND

- CERAMIC TILE 1
- CERAMIC TILE 2
- 10 11 23 TACKBOARD
- FIBER REINFORCED LAMINATE

KEYNOTES

	Keynote Text
9.3	FRL
10.19	10 28 00 MIRROR 18" X 30"
10.31	10 28 00 SURFACE-MTD MEDICINE CABINET
12.14	FOIO MOP BUCKET

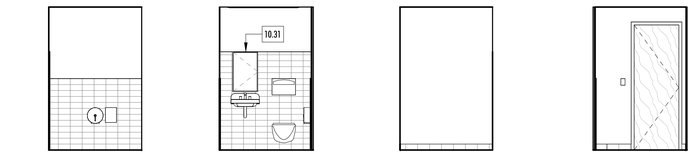

16 NORTH 1/4" = 1'-0"

15 WEST 1/4" = 1'-0"

14 SOUTH 1/4" = 1'-0"

13 EAST TLT 211C 1/4" = 1'-0"

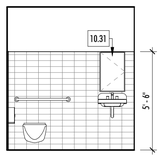

12 NORTH 1/4" = 1'-0"

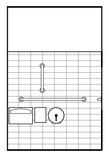

11 WEST 1/4" = 1'-0"

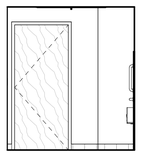

10 SOUTH 1/4" = 1'-0"

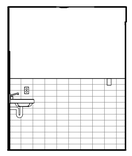

9 EAST TLT 211A 1/4" = 1'-0"

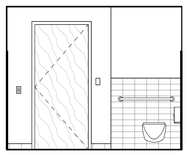

8 NORTH 1/4" = 1'-0"

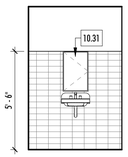

7 WEST 1/4" = 1'-0"

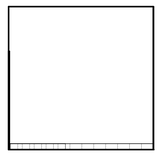

6 SOUTH 1/4" = 1'-0"

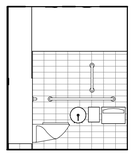

5 EAST TLT 201 1/4" = 1'-0"

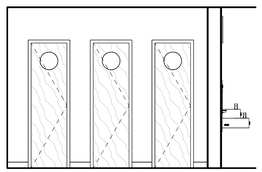

4 WEST 1/4" = 1'-0"

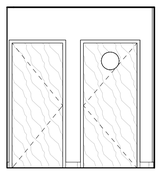

3 L02 STUDENT TLTS S 1/4" = 1'-0"

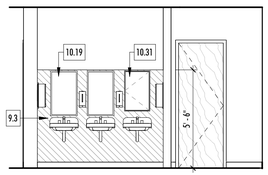

2 L02 STUDENT TLTS E 1/4" = 1'-0"

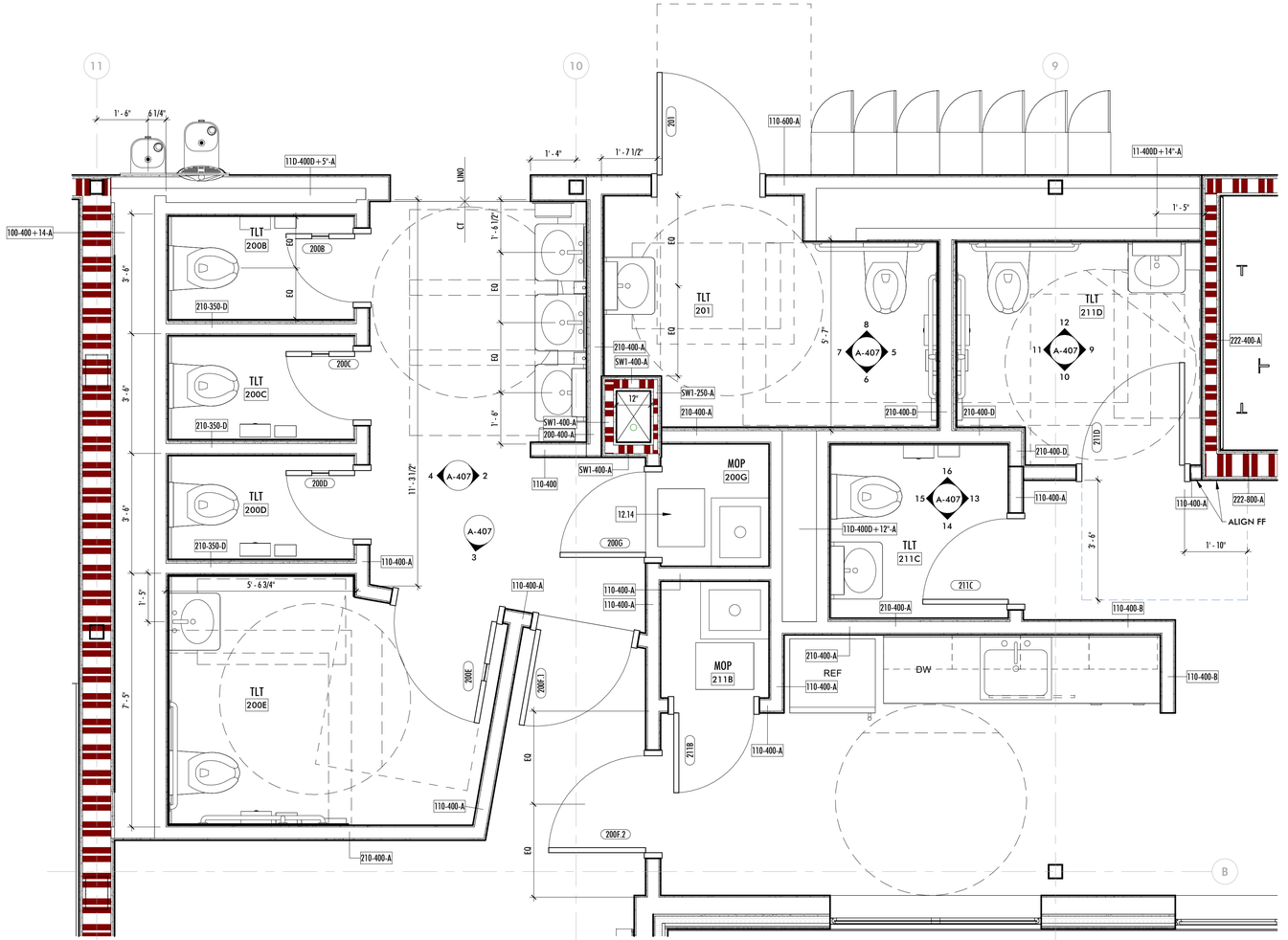

1 TLTS 200B - 200E 1/2" = 1'-0"

3427 BEACON AVE S
SEATTLE 98144
ANJALI@AGRANTDESIGN.COM
206-512-4209

anjali grant design LLC

3700 E MERCER WAY
BARNABIE POINT PROJECT

NO.	DATE	DESCRIPTION
	4 JUNE 2025	BUILDING PERMIT

PROJECT:

RESTROOMS

A-407

12/15/2025 11:37:28 AM C:\Users\EmmyValav\Documents\BP7_PSB_R24_CD_wasteTBS5R.rvt
© ANJALI GRANT DESIGN LLC ORIGINAL SHEET SIZE: 24" X 36"

WALL FINISH LEGEND

- CERAMIC TILE 1
- CERAMIC TILE 2
- 10 11 23 TACKBOARD
- FIBER REINFORCED LAMINATE

KEYNOTES

	Keynote Text
10.31	10 28 00 SURFACE-MTD MEDICINE CABINET
12.14	FOIO MOP BUCKET

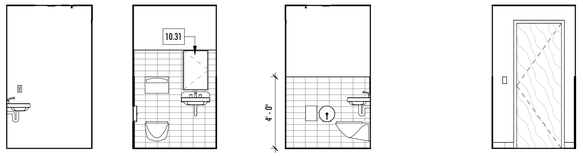

9 NORTH 1/4" = 1'-0"

8 WEST 1/4" = 1'-0"

7 SOUTH 1/4" = 1'-0"

6 300G E (300A SIM) 1/4" = 1'-0"

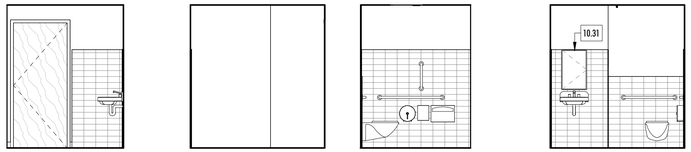

5 NORTH 1/4" = 1'-0"

4 WEST 1/4" = 1'-0"

3 SOUTH 1/4" = 1'-0"

2 300B E (300C SIM OPP) 1/4" = 1'-0"

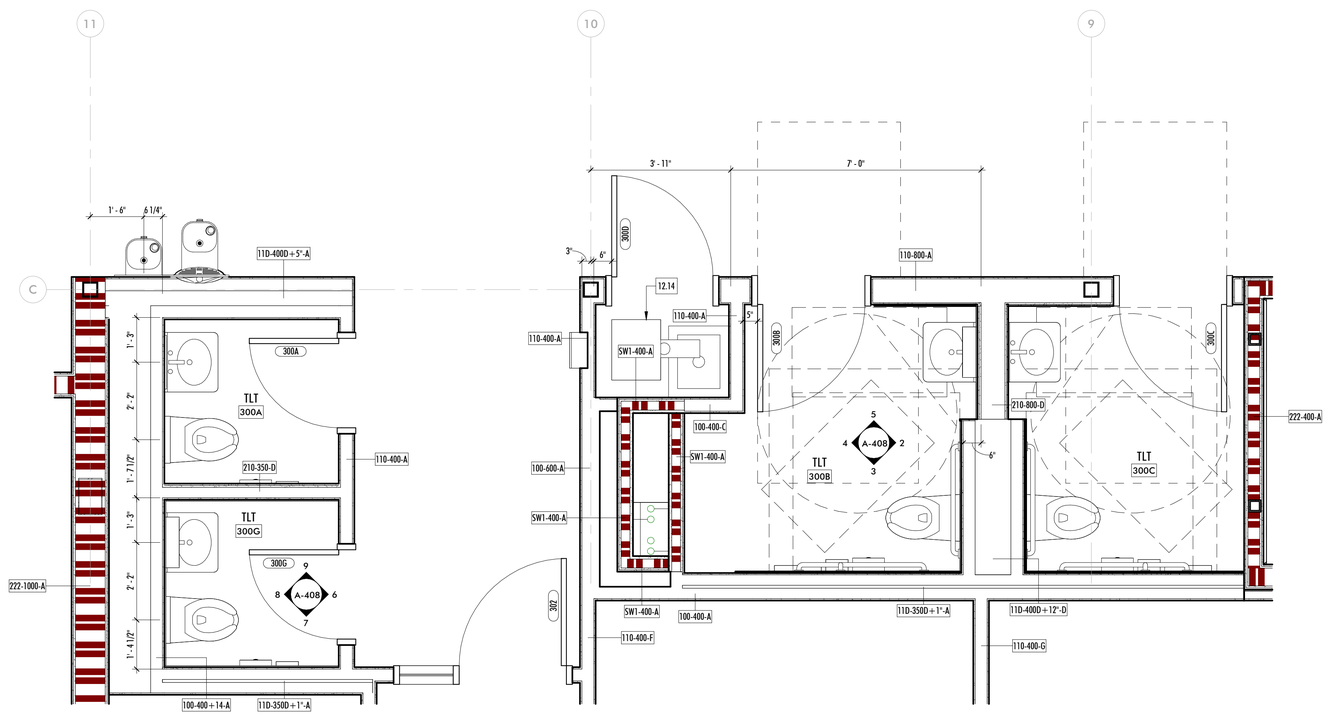

1 TLT 300A, 300B, 300C 1/2" = 1'-0"

3427 BEACON AVE S
SEATTLE 98144
ANJALI@AGRANTDESIGN.COM
206-512-4209

anjali grant design LLC

3700 E MERCER WAY
BARNABIE POINT PROJECT

NO.	DATE	DESCRIPTION

4 JUNE 2025
BUILDING PERMIT

PROJECT:

RESTROOMS

A-408

12/15/2025 11:37:32 AM C:\Users\EashaYadav\Documents\BPP_P08_R24_CD_eashaTB55R.rvt
© ANJALI GRANT DESIGN LLC ORIGINAL SHEET SIZE: 24" X 36"

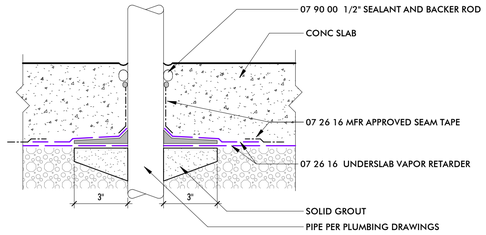

D1 PIPE PENETRATION THROUGH SLAB-ON-GRADE TYP

3" = 1'-0"

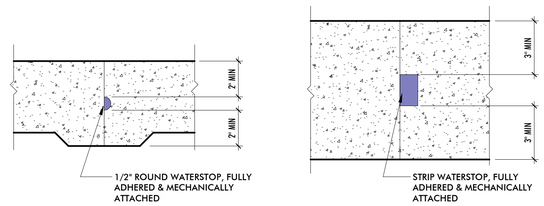

C1 WATERSTOP TYP

3" = 1'-0"

SEE B1/ A-501 FOR TYPICAL NOTES

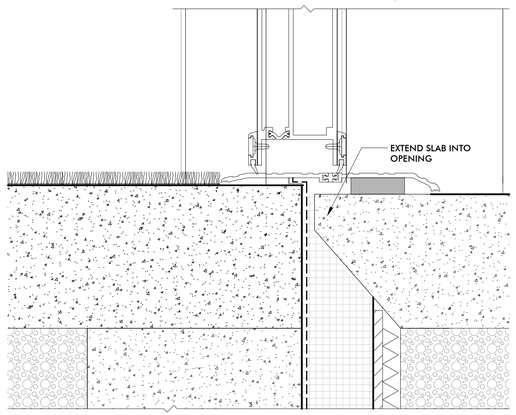

B2 SLAB DTL AT EXTERIOR DOORS AT SLAB ON GRADE

6" = 1'-0"

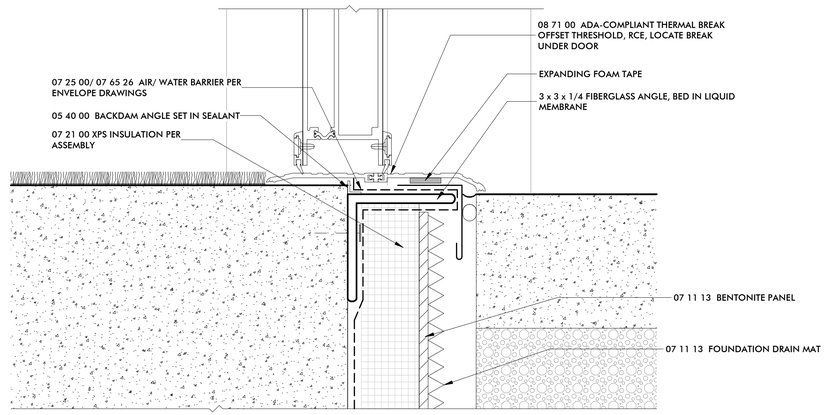

B1 SLAB DTL AT EXTERIOR DOORS ABOVE CONDITIONED SPACE

6" = 1'-0"

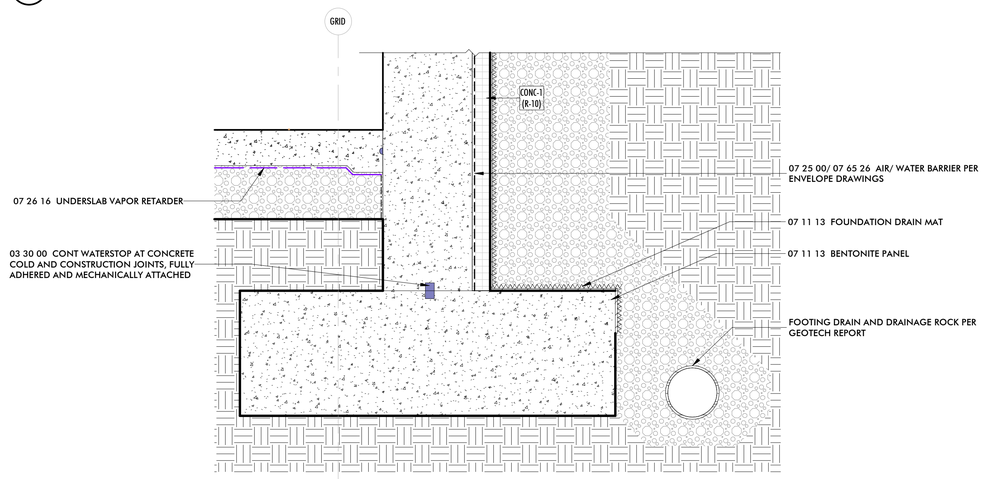

A1 FOOTING DTL TYP

1 1/2" = 1'-0"

12/15/2025 11:37:34 AM C:\Users\Anjali\Yadav\Documents\BIP\r_PSB_R24_CD_eastaTB50R.rvt
© ANJALI GRANT DESIGN LLC ORIGINAL SHEET SIZE: 24" X 36"

3427 BEACON AVE S
SEATTLE 98144
ANJALI@AGRANTDESIGN.COM
206-512-4209

anjali grant design LLC

3700 E MERCER WAY
BARNABIE POINT PROJECT

NO.	DATE	DESCRIPTION
	4 JUNE 2025	BUILDING PERMIT

PROJECT:

EXTERIOR DETAILS - FOUNDATION

A-501

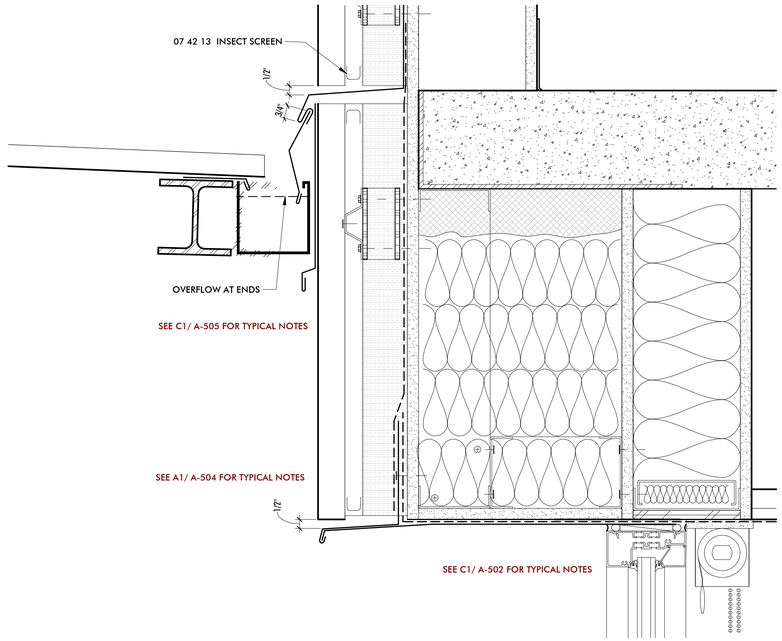

C3 CANOPY DTL AT PRESCHOOL
3" = 1'-0"

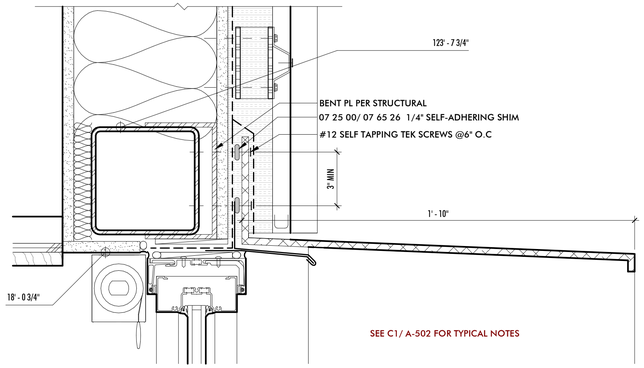

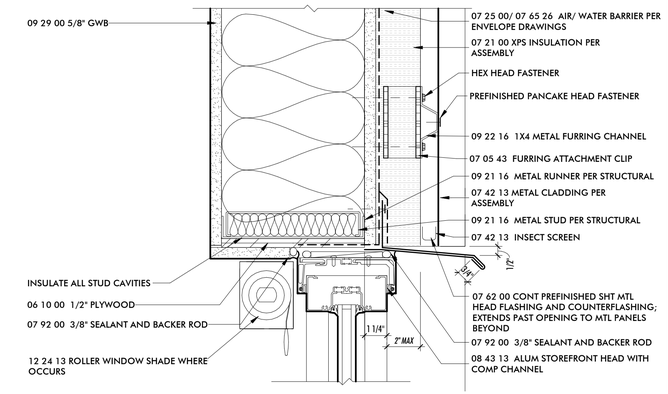

C1 STOREFRONT HEAD DTL TYP
3" = 1'-0"

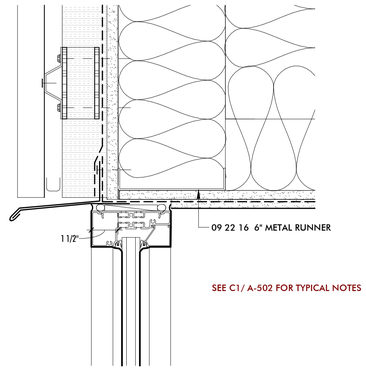

B3 STOREFRONT HEAD AT ENTRY SOFFIT
3" = 1'-0"

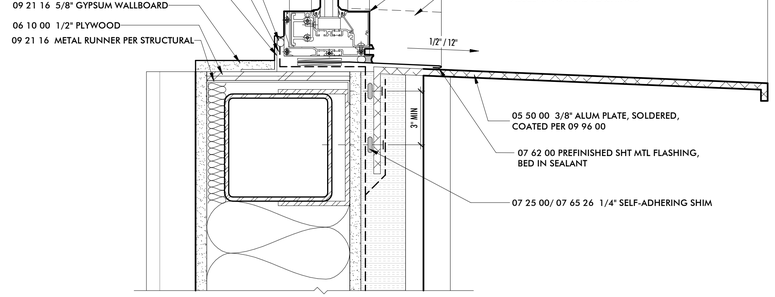

B2 MTL SHROUD AT EAST WALL
3" = 1'-0"

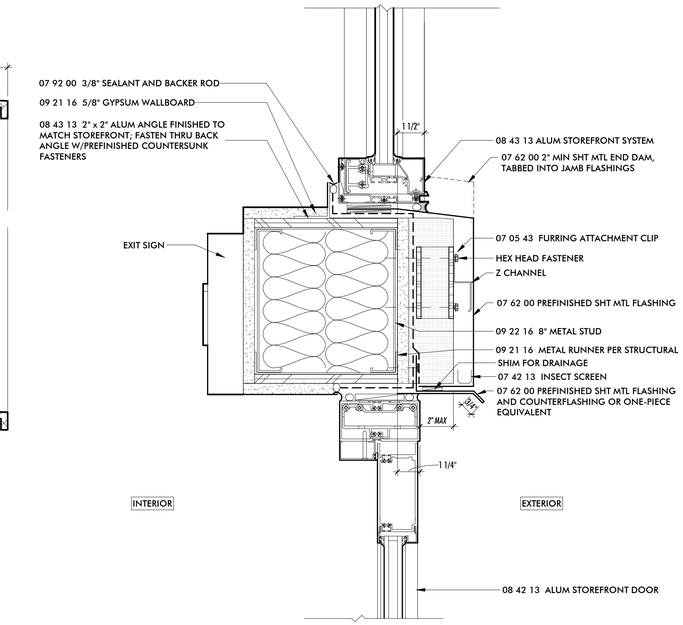

B1 STOREFRONT SILL/ HEAD TYP
3" = 1'-0"

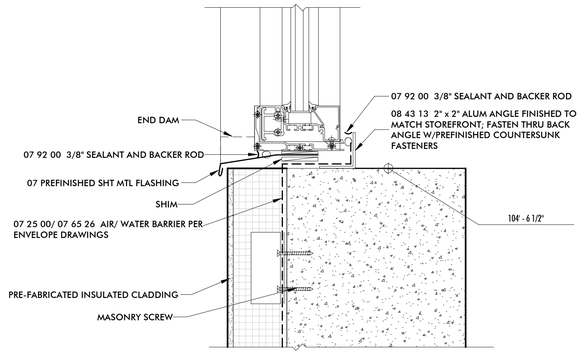

A3 STOREFRONT SILL AT CONC
3" = 1'-0"

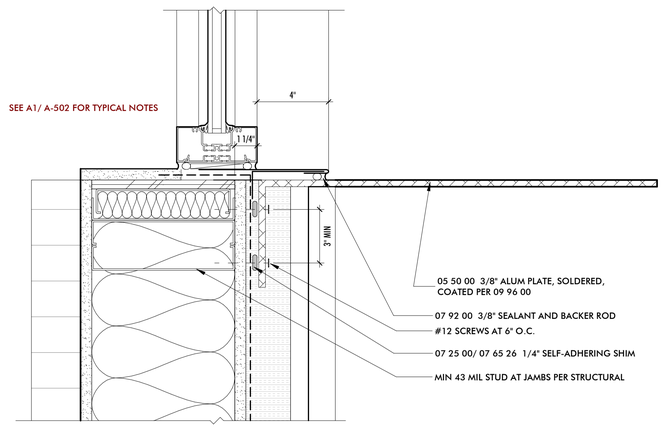

A2 MTL SHROUD JAMB
3" = 1'-0"

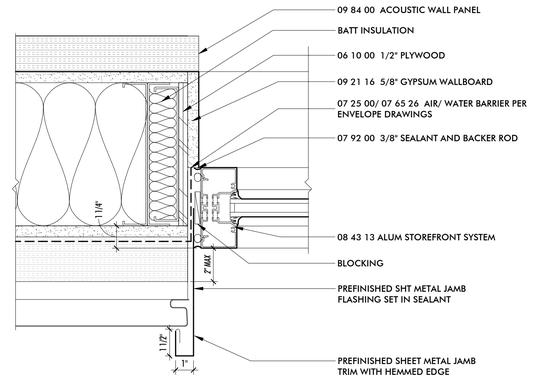

A1 STOREFRONT JAMB TYP
3" = 1'-0"

3427 BEACON AVE S
SEATTLE 98144
ANJALI@AGRANTDESIGN.COM
206-512-4209
anjali grant design LLC

3700 E MERCER WAY
BARNABIE POINT PROJECT

NO.	DATE	DESCRIPTION
	4 JUNE 2025	BUILDING PERMIT

PROJECT:

EXTERIOR DETAILS - OPENINGS

A-502

12/15/2025 11:37:38 AM C:\Users\Evelyn\Desktop\Documents\BPP_R24_CD_evelynTREVOR.rvt
© ANJALI GRANT DESIGN LLC ORIGINAL SHEET SIZE: 24" X 36"

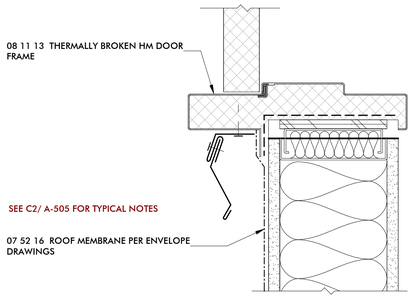

D3 HM SILL AT ROOF
3" = 1'-0"

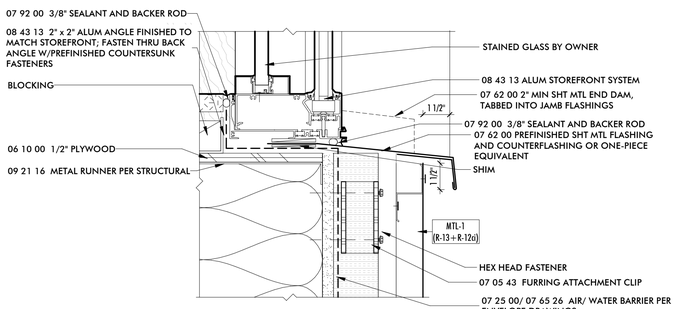

D2 WDW SILL AT S CHAPEL WALL
3" = 1'-0"

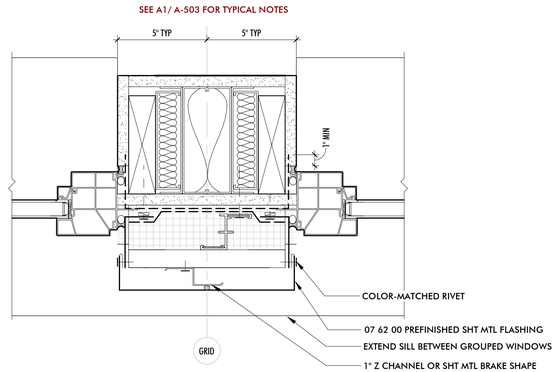

D1 WDW TO WDW JAMB TYP
3" = 1'-0"

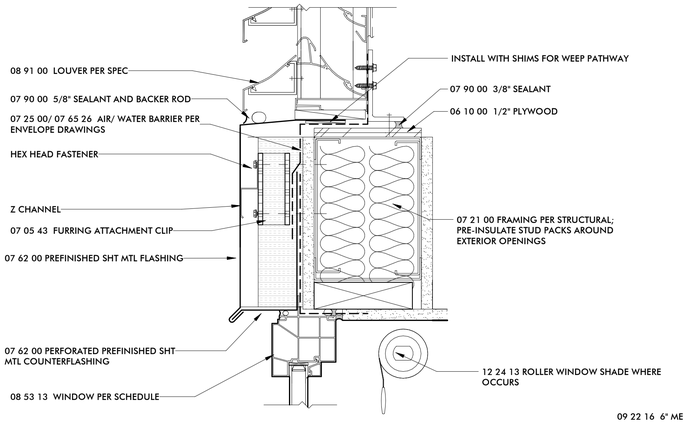

C3 LOUVER TO WDW SILL/HEAD
3" = 1'-0"

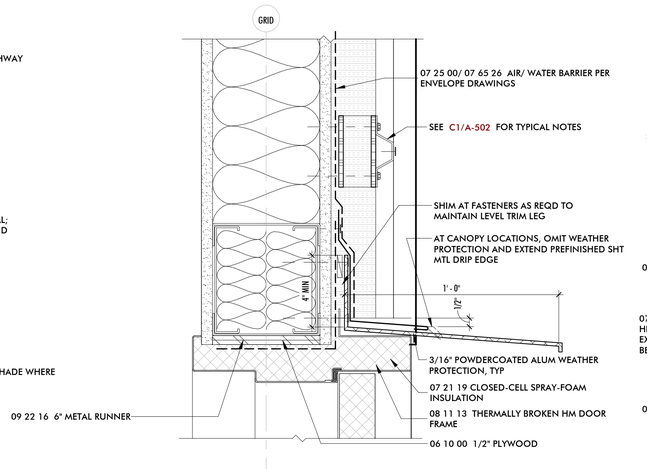

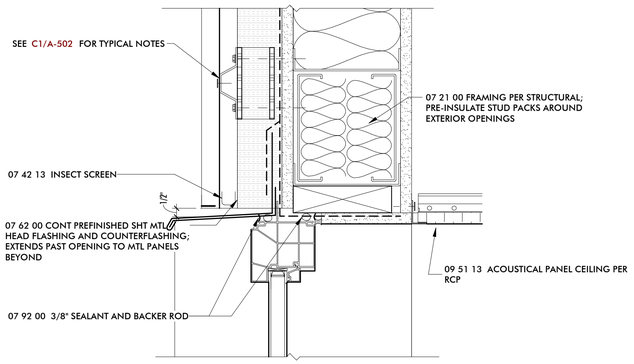

C1 WDW HEAD TYP
3" = 1'-0"

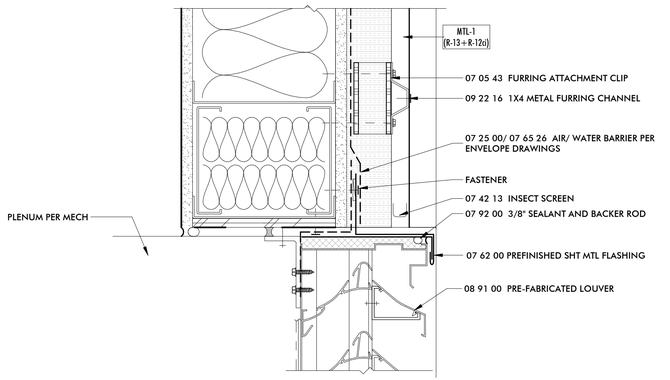

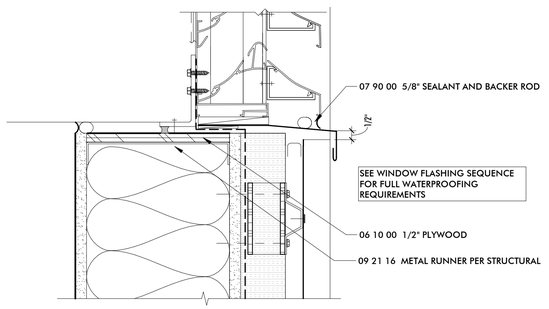

A3 LOUVER DETAIL TYP
3" = 1'-0"

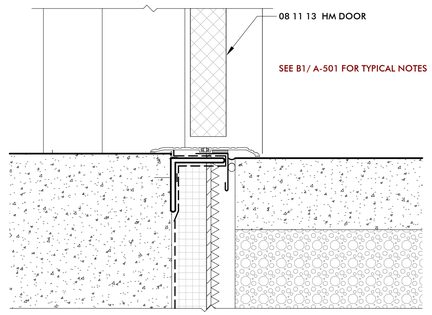

B2 HM DOOR HEAD AND SILL
3" = 1'-0"

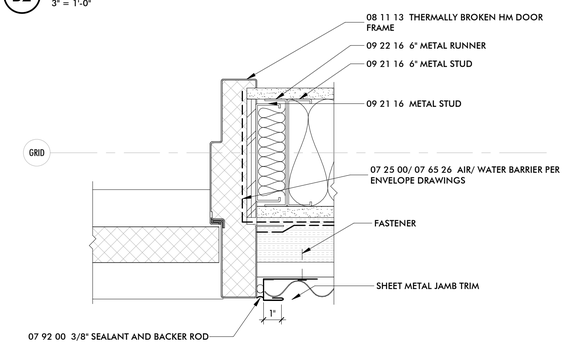

A2 HM DOOR JAMB DTL
3" = 1'-0"

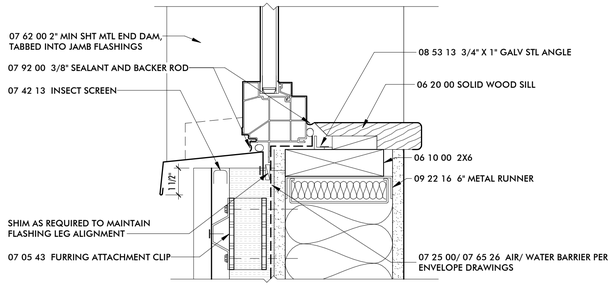

B1 WDW SILL TYP
3" = 1'-0"

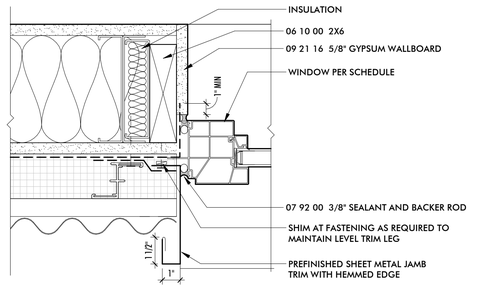

A1 WINDOW JAMB TYP
3" = 1'-0"

anjali grant design LLC
3427 BEACON AVE S
SEATTLE 98144
ANJALI@AGRANTDESIGN.COM
206-512-4209

3700 E MERCER WAY
BARNABIE POINT PROJECT

NO.	DATE	DESCRIPTION
	4 JUNE 2025	BUILDING PERMIT

PROJECT:

EXTERIOR DETAILS - OPENINGS

A-503

12/15/2025 11:37:43 AM C:\Users\Elaina Yadav\Documents\BIM_R24_CD_elaina1785SR.rvt
© ANJALI GRANT DESIGN LLC ORIGINAL SHEET SIZE: 24" X 36"

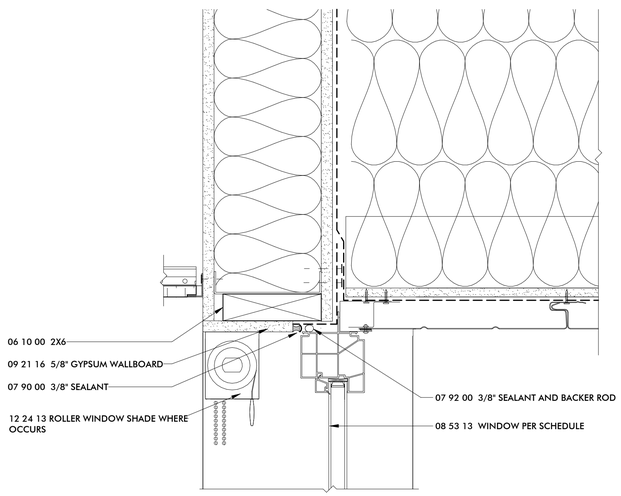

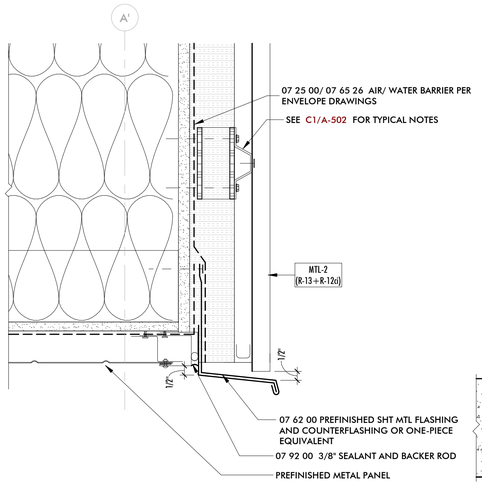

B3 EXTERIOR SOFFIT DTL
3" = 1'-0"

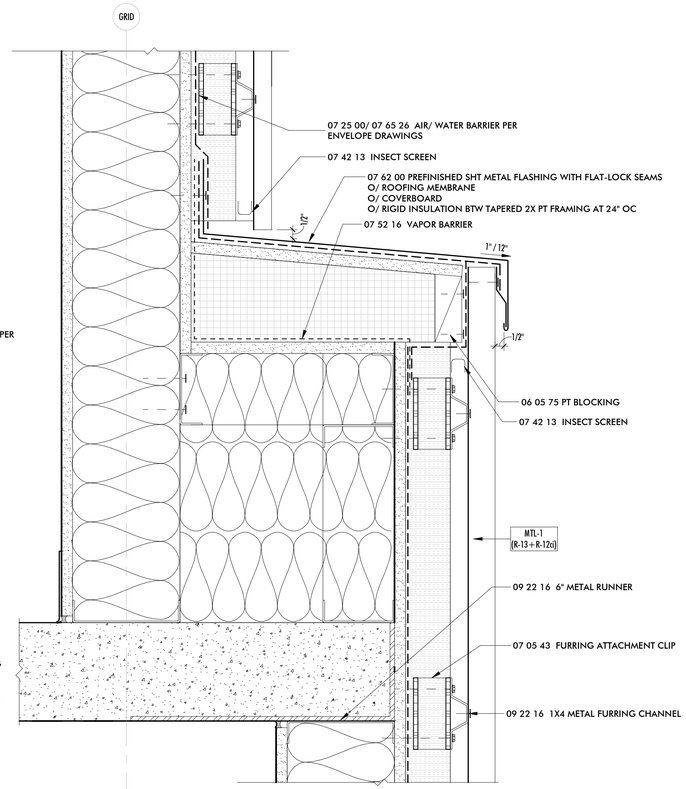

B1 OFFSET SLAB EDGE AT L03
3" = 1'-0"

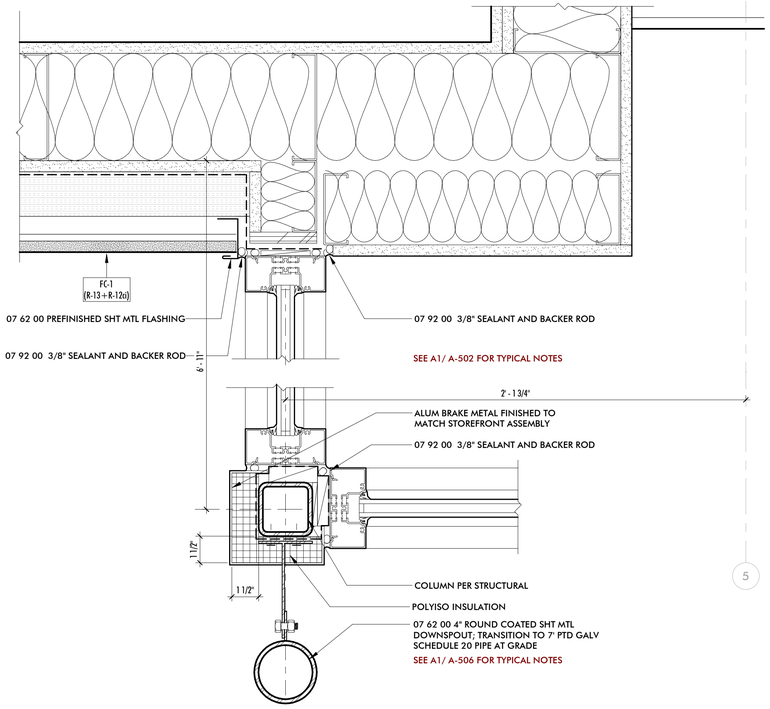

A3 STOREFRONT PLAN DTL AT ENTRY
3" = 1'-0"

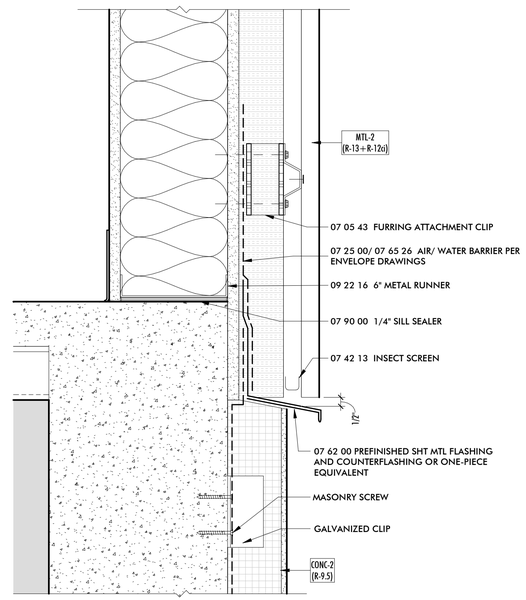

A2 MTL SIDING TO CONC WALL TYP
3" = 1'-0"

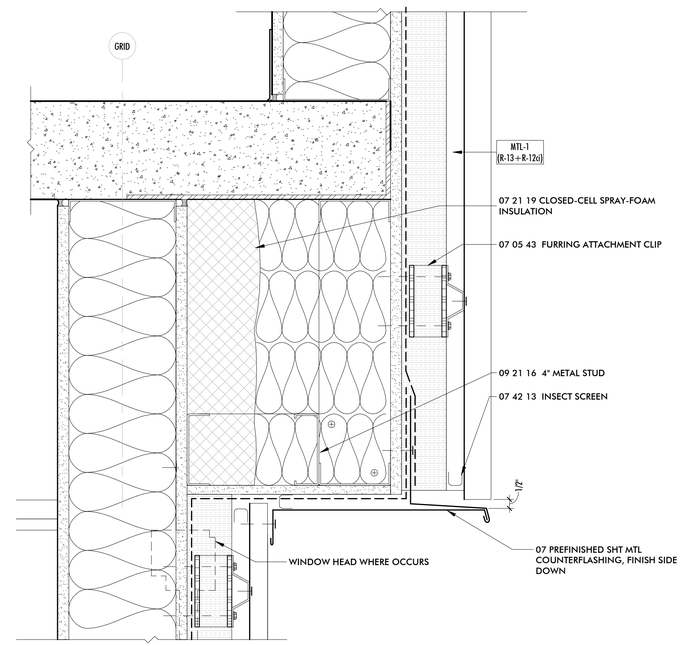

A1 OFFSET SLAB EDGE AT L02
3" = 1'-0"

3427 BEACON AVE S
SEATTLE 98144
ANJALI@AGRANTDESIGN.COM
206-512-4209

anjali grant design LLC

3700 E MERCER WAY
BARNABIE POINT PROJECT

NO.	DATE	DESCRIPTION
	4 JUNE 2025	BUILDING PERMIT

PROJECT:

EXTERIOR DETAILS - WALLS+SOFFITS

A-504

12/15/2025 2:23:31 PM D:\REVIT LOCAL\BIPP_PS8_RQ4_CD_anjaneattle.rvt
© ANJALI GRANT DESIGN LLC ORIGINAL SHEET SIZE: 24" X 36"

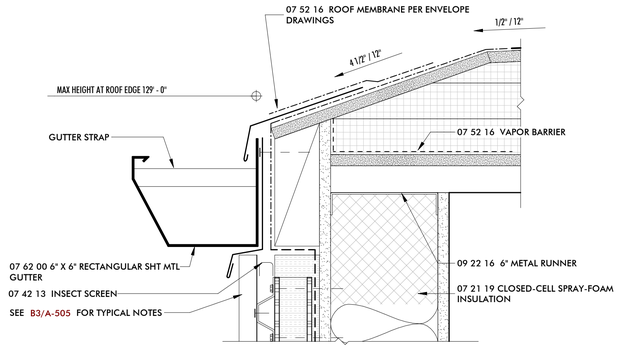

C3 GUTTER TYP
3" = 1'-0"

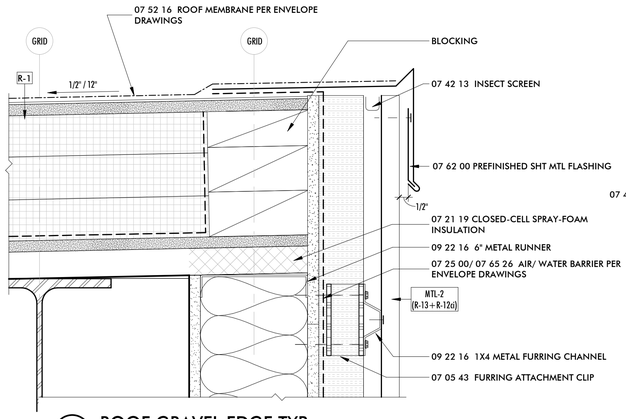

B3 ROOF GRAVEL EDGE TYP
3" = 1'-0"

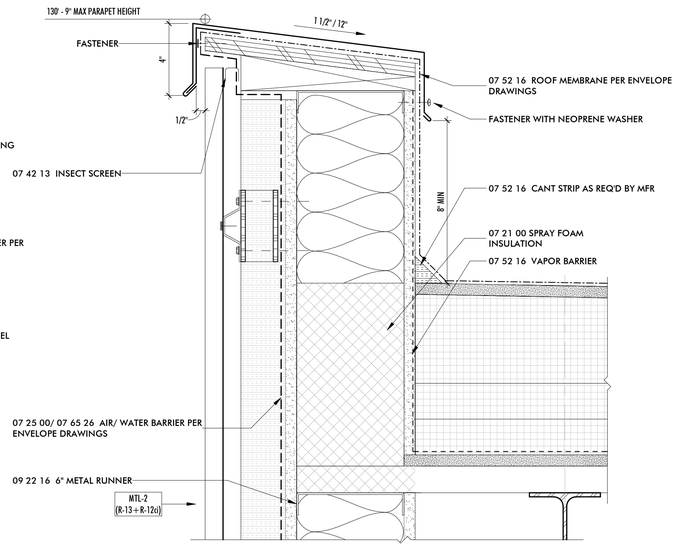

A3 ROOF PARAPET DETAIL TYP
3" = 1'-0"

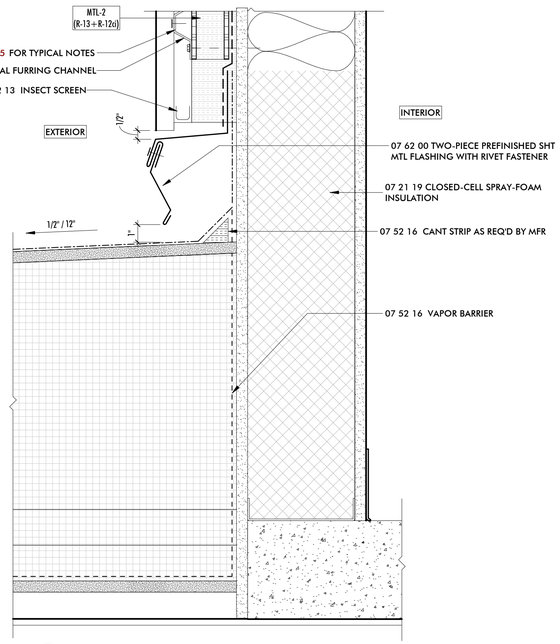

C2 ROOF TO WALL TYP
3" = 1'-0"

SEE B3/ A-505 FOR TYPICAL NOTES

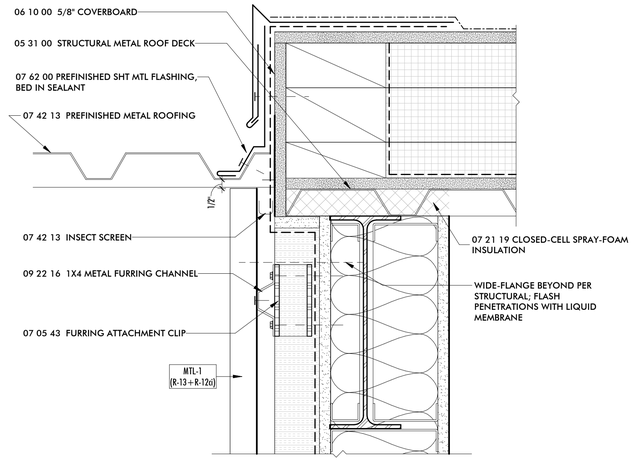

B2 ROOF TRANSITION AT CHAPEL ENTRY
3" = 1'-0"

A1 SKYLIGHT DTL
3" = 1'-0"

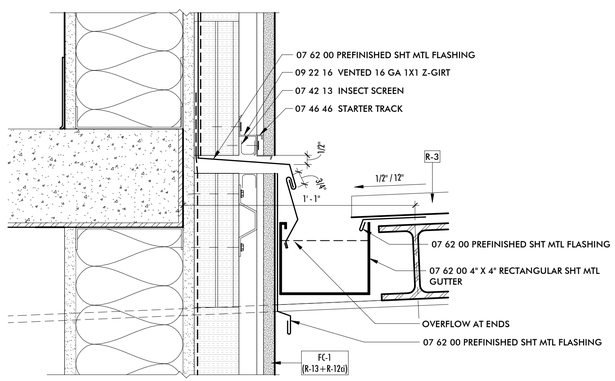

C1 CANOPY ROOF TO WALL DTL AT ENTRY
3" = 1'-0"

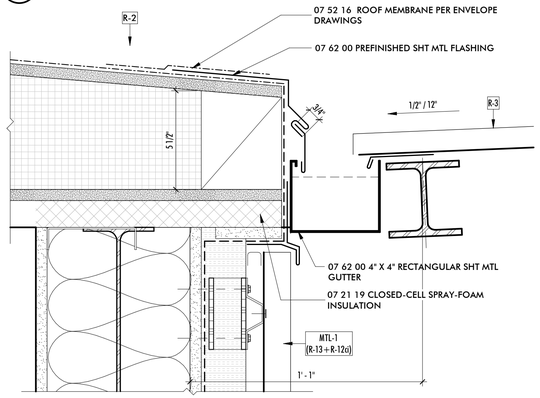

B1 GUTTER AT CHAPEL ENTRY
3" = 1'-0"

anjali grant design LLC
3427 BEACON AVE S
SEATTLE 98144
ANJALI@AGRANTDESIGN.COM
206-512-4209

3700 E MERCER WAY
BARNABIE POINT PROJECT

NO.	DATE	DESCRIPTION
	4 JUNE 2025	BUILDING PERMIT

PROJECT:

EXTERIOR DETAILS - ROOF

A-505

12/15/2025 11:37:50 AM C:\Users\EatherY\Desktop\Documents\BPP_PSB_R24_CD_eatherYT65R.rvt
© ANJALI GRANT DESIGN LLC ORIGINAL SHEET SIZE: 24" X 36"

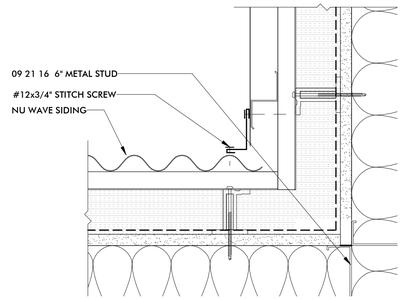

C2 SIDING INSIDE CORNER (NU WAVE AND PRESTIGE)
3" = 1'-0"

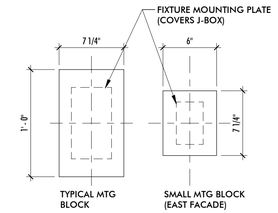

C1 WALL-MTD LIGHTING MOUNTING BLOCK
1 1/2" = 1'-0"

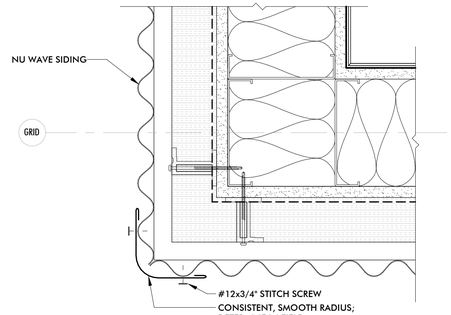

B2 SIDING OUTSIDE CORNER (NU WAVE)
3" = 1'-0"

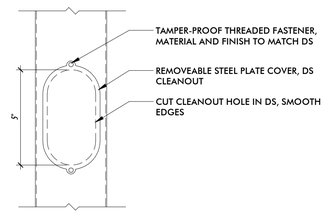

B1 DOWNSPOUT CLEANOUT DTL, TYP
3" = 1'-0"

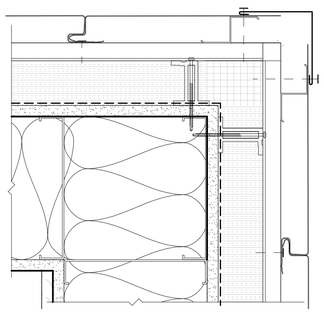

A2 SIDING OUTSIDE CORNER (PRESTIGE)
3" = 1'-0"

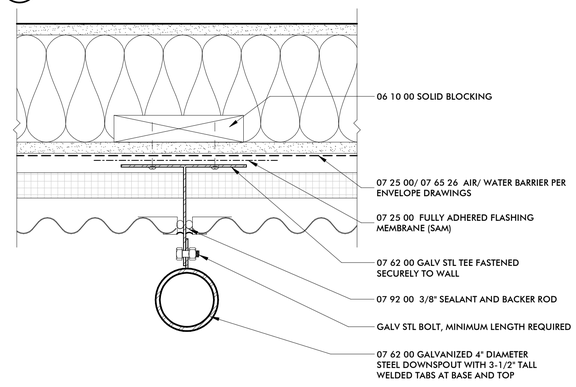

A1 DOWNSPOUT WALL MOUNTING DTL, TYP
3" = 1'-0"

anjali grant design LLC
3427 BEACON AVE S
SEATTLE 98144
ANJALI@AGRANTDESIGN.COM
206-512-4209

3700 E MERCER WAY
BARNABIE POINT PROJECT

NO.	DATE	DESCRIPTION
	4 JUNE 2025	BUILDING PERMIT

PROJECT:

EXTERIOR DETAILS

A-506

12/15/2025 11:37:52 AM C:\Users\EashaYadav\Documents\BPP_PS8_R24_CD_eashaTB55R.rvt
© ANJALI GRANT DESIGN LLC ORIGINAL SHEET SIZE: 24" X 36"

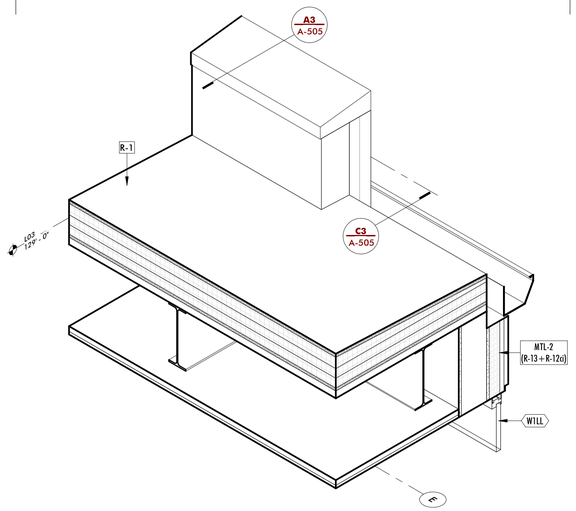

C4 PARAPET TO GUTTER
1" = 1'-0"

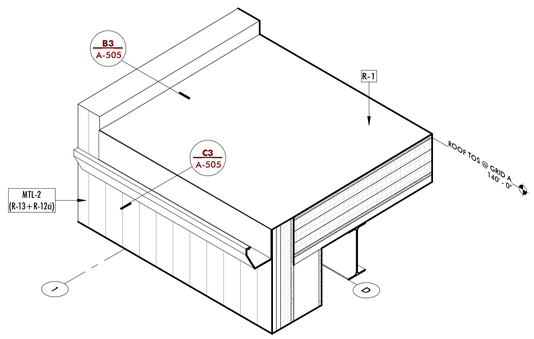

C3 DRIP EDGE TO GUTTER
1" = 1'-0"

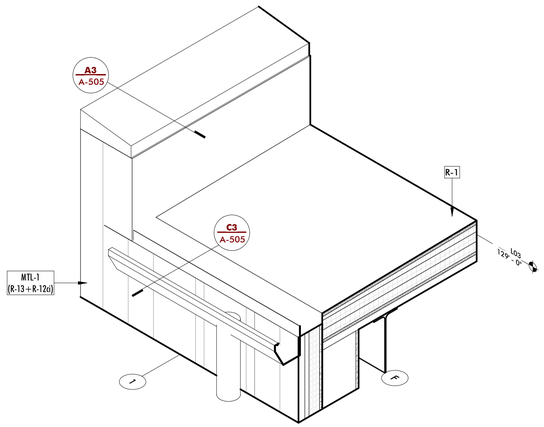

C2 PARAPET TO GUTTER AT CORNER
1" = 1'-0"

SEE ENVELOPE DRAWINGS FOR TYPICAL SADDLE CONDITIONS AND DETAILS

3427 BEACON AVE S
SEATTLE 98144
ANJALI@AGRANTDESIGN.COM
206-512-4209

anjali grant design LLC

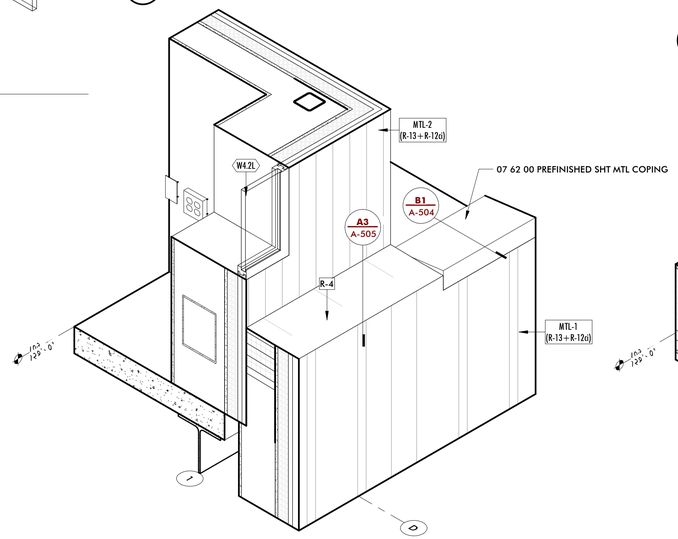

B3 PARAPET TO ROOF OFFSET EAST
1" = 1'-0"

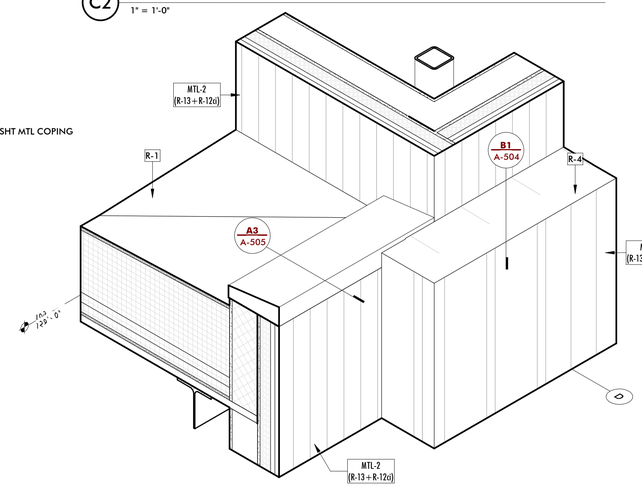

B2 PARAPET TO ROOF OFFSET WEST
1" = 1'-0"

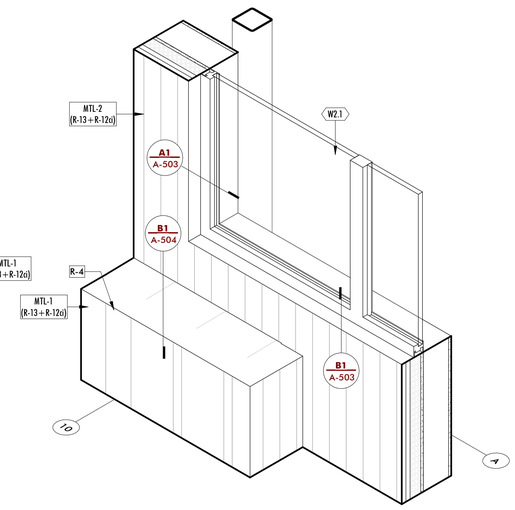

B1 PARAPET AT CLADDING
1" = 1'-0"

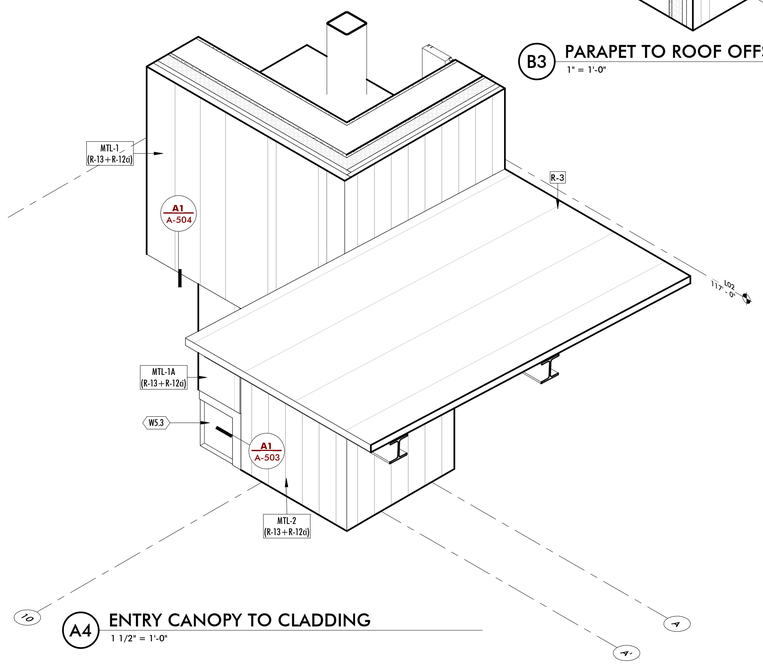

A4 ENTRY CANOPY TO CLADDING
1 1/2" = 1'-0"

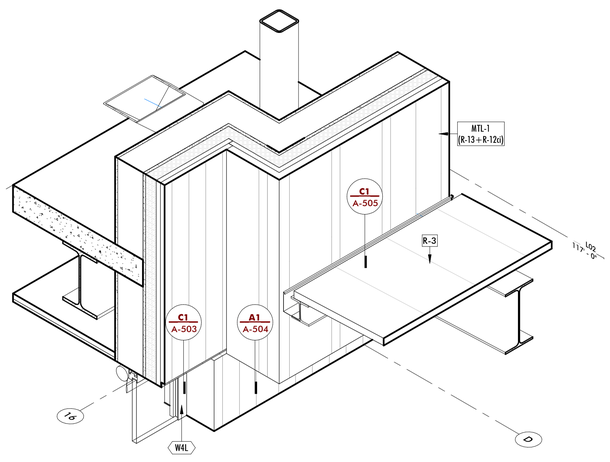

4 CANOPY TO CLADDING AT GUTTER
1" = 1'-0"

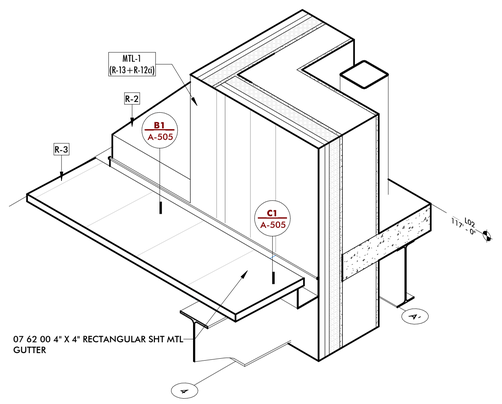

A1 ENTRY CANOPY TO GUTTER / CLADDING
1" = 1'-0"

3700 E MERCER WAY
BARNABIE POINT PROJECT

NO.	DATE	DESCRIPTION
	4 JUNE 2025	BUILDING PERMIT

PROJECT:

AXONOMETRIC DETAILS

A-507

12/15/2025 11:37:57 AM C:\Users\Eastwin\Documents\BIM_P26_R24_CD_eastwin785ML.rvt
© ANJALI GRANT DESIGN LLC ORIGINAL SHEET SIZE: 24" X 36"

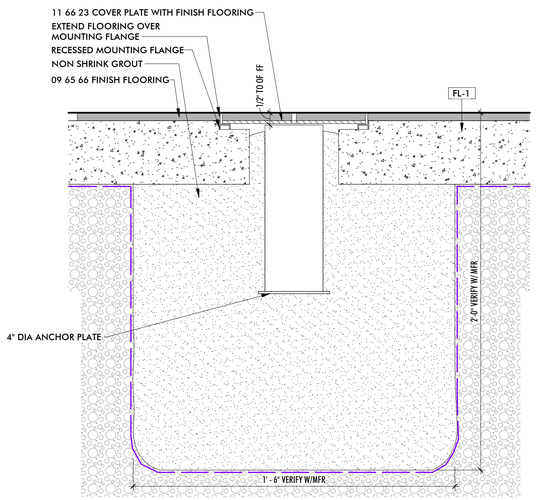

C4 POST FLOOR SLEEVE
3" = 1'-0"

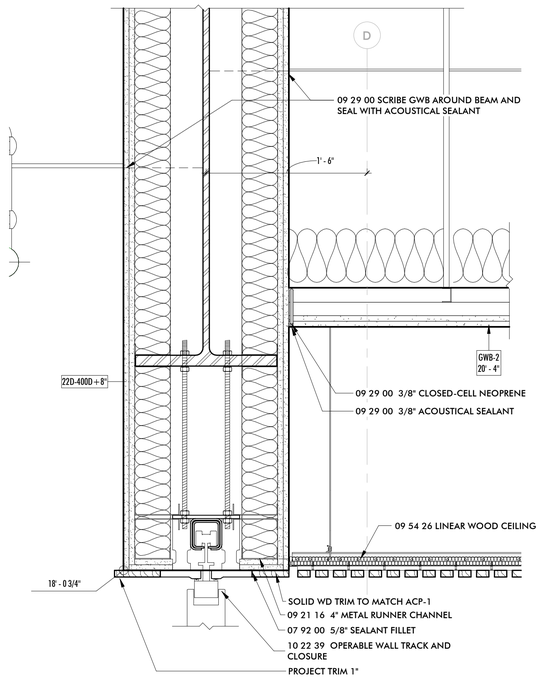

C3 OPERABLE WALL HEAD AT GRID D.1
1 1/2" = 1'-0"

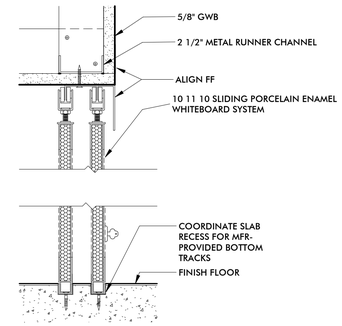

C2 SLIDING WHITEBOARD HEAD AND SILL
3" = 1'-0"

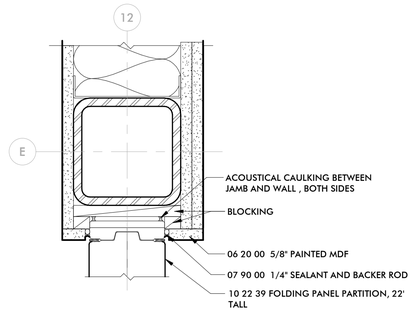

C1 INT-OPERABLE WALL JAMB AT CLASSRM
3" = 1'-0"

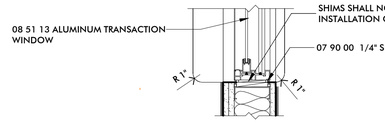

B2 TRANSACTION WDW JAMB DTL
1 1/2" = 1'-0"

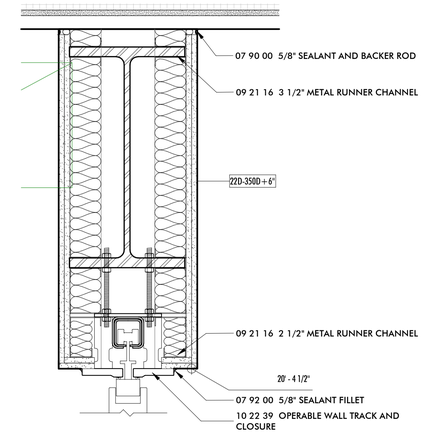

B1 OPERABLE WALL HEAD AT GRID 3.3
1 1/2" = 1'-0"

A4 TELESCOPING SEATING DTL
1 1/2" = 1'-0"

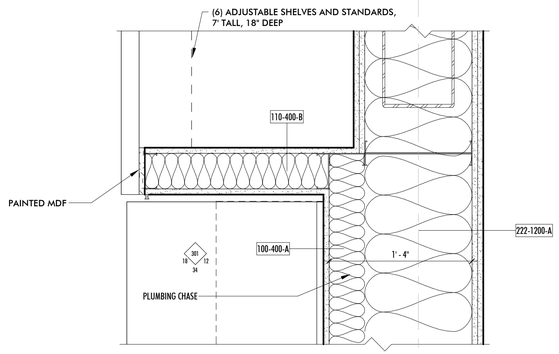

A3 SLIDING WALL/PLUMBING CHASE TYP
1 1/2" = 1'-0"

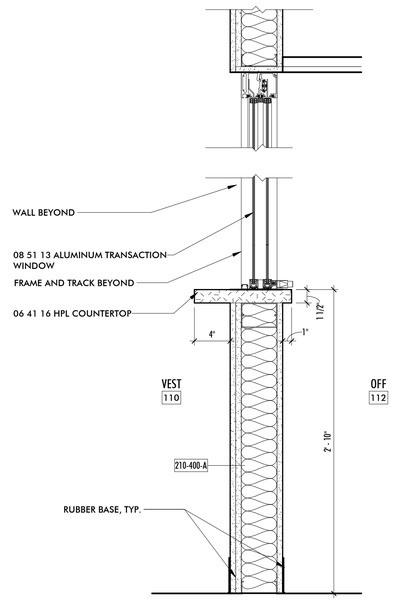

A2 TRANSACTION WDW SILL/HEAD DTL
1 1/2" = 1'-0"

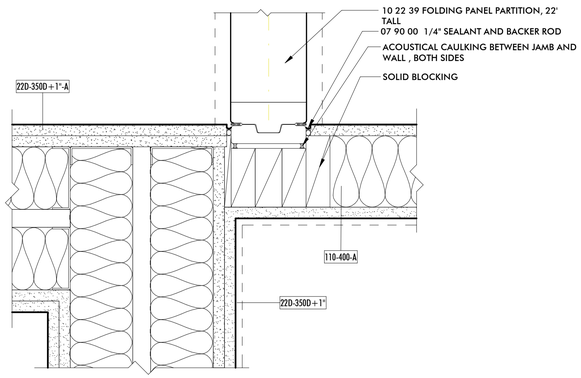

A1 OPERABLE WALL JAMB TYP
3" = 1'-0"

3427 BEACON AVE S
SEATTLE 98144
ANJALI@AGRANTDESIGN.COM
206-512-4209

anjali grant design LLC

3700 E MERCER WAY
BARNABIE POINT PROJECT

NO.	DATE	DESCRIPTION
	4 JUNE 2025	BUILDING PERMIT

PROJECT:

INTERIOR DETAILS

A-520

12/15/2025 11:38:02 AM C:\Users\Earlan\Desktop\Documents\BP_PSB_RCH_CD_earlan11850R.rvt
© ANJALI GRANT DESIGN LLC ORIGINAL SHEET SIZE: 24" X 36"

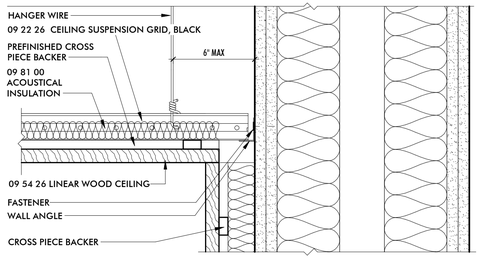

D4 WOOD CEILING - WEST WALL
3" = 1'-0"

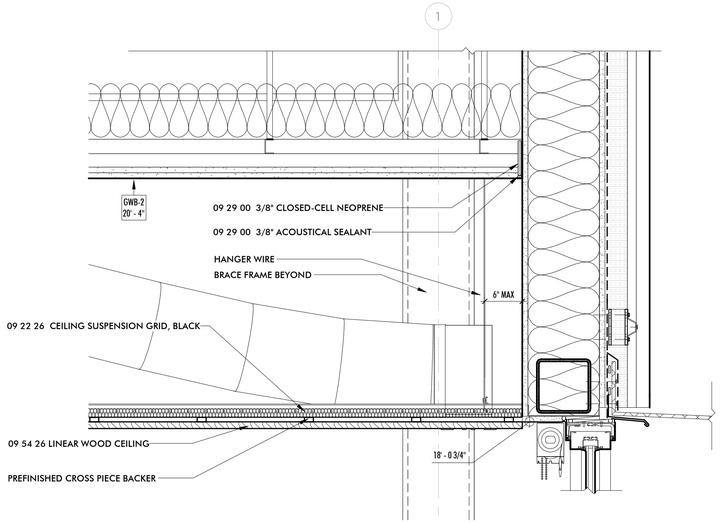

D2 WOOD CEILING AT EAST WALL
1 1/2" = 1'-0"

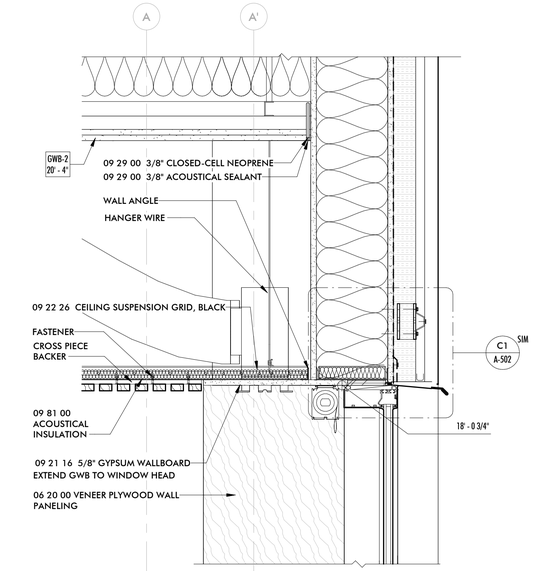

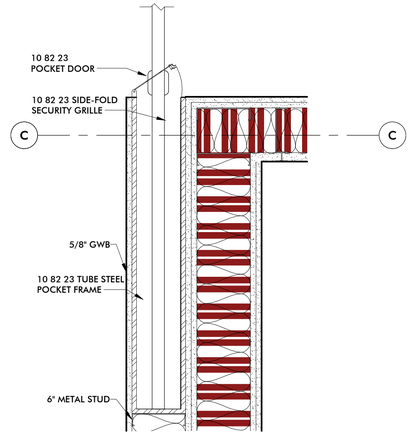

C4 SIDE FOLDING SECURITY GRILLE JAMB
1 1/2" = 1'-0"

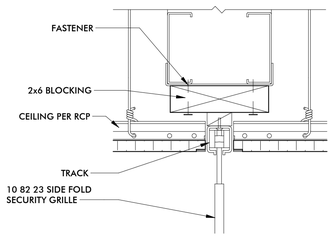

B4 SIDE FOLDING SECURITY GRILLE HEAD
3" = 1'-0"

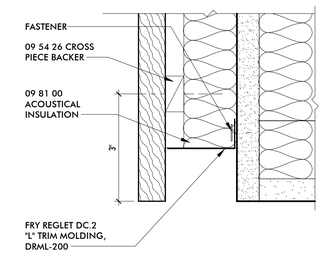

A4 LINEAR WOOD PANELLING - TYP TRIM AT OPENING
6" = 1'-0"

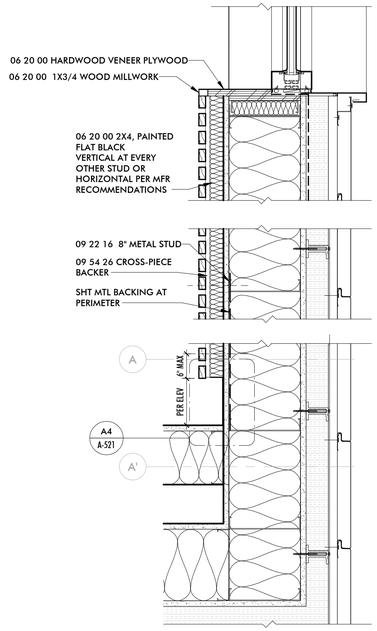

A3 LINEAR WOOD WALL PANELLING DTL
1 1/2" = 1'-0"

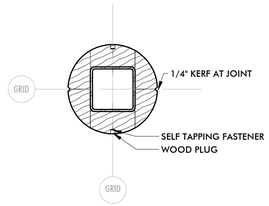

B2 COLUMN WOOD WRAP DETAIL
1 1/2" = 1'-0"

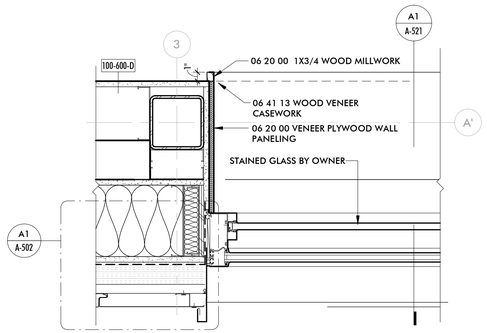

A2 STAINED GLASS JAMB DTL
1 1/2" = 1'-0"

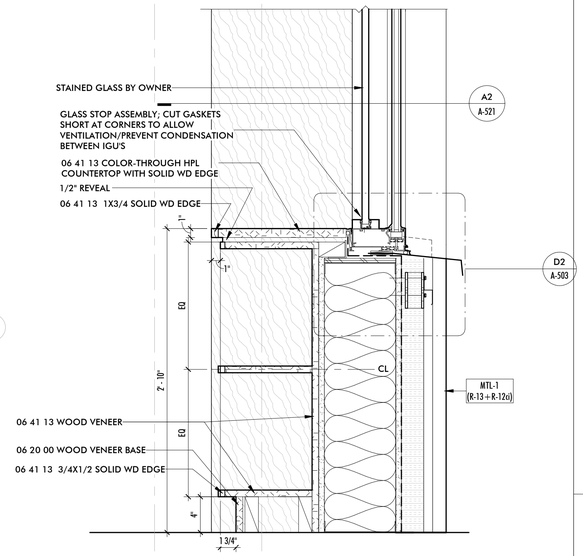

A1 CHAPEL SOUTH WALL
1 1/2" = 1'-0"

3427 BEACON AVE S
SEATTLE 98144
ANJALI@AGRANTDESIGN.COM
206-512-4209

anjali grant design LLC

3700 E MERCER WAY
BARNABIE POINT PROJECT

NO.	DATE	DESCRIPTION
	4 JUNE 2025	BUILDING PERMIT

PROJECT:

INTERIOR DETAILS

A-521

12/15/2025 11:38:07 AM C:\Users\Estelle\Documents\BIP9_P56_R24_CD_estelleTREGR.rvt
© ANJALI GRANT DESIGN LLC ORIGINAL SHEET SIZE: 24" X 36"

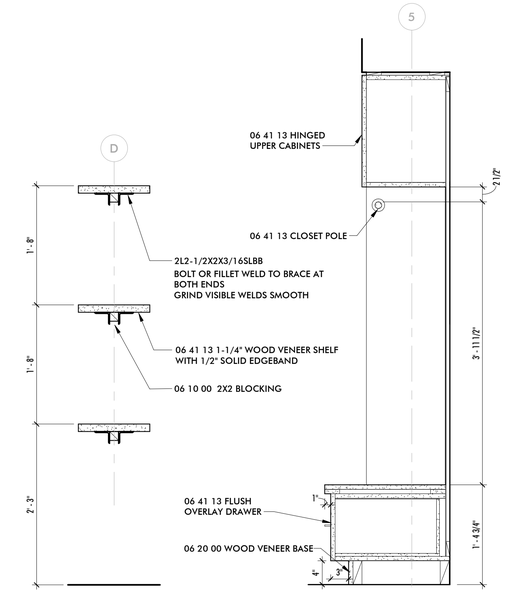

C9 FLOATING SHELF
1" = 1'-0"

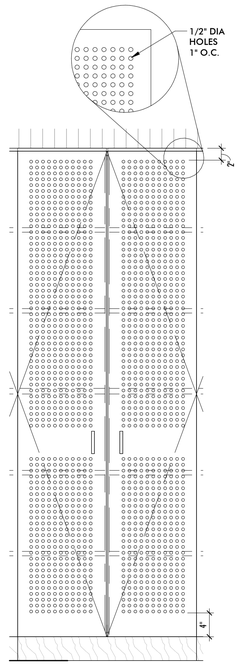

C8 LOBBY COAT CLOSET
1" = 1'-0"

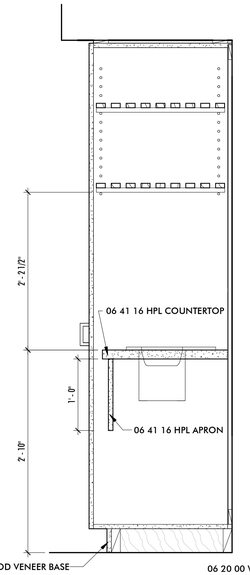

C7 INSTR. STORAGE DOORS
1" = 1'-0"

C6 INSTR. STORAGE AT SINK
1" = 1'-0"

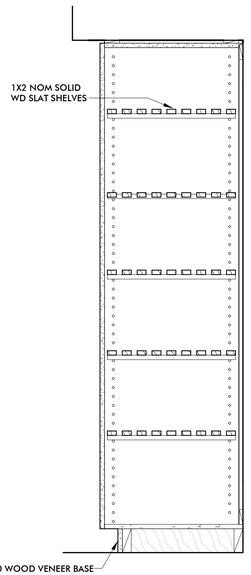

C5 INSTRUMENT STORAGE
1" = 1'-0"

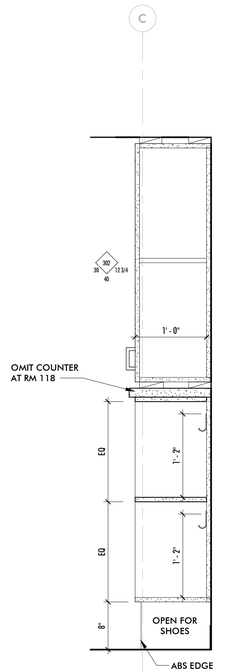

C4 PRESCHOOL CUBBY
1" = 1'-0"

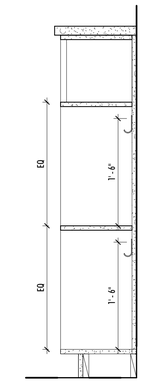

C3 L02 CUBBY
1" = 1'-0"

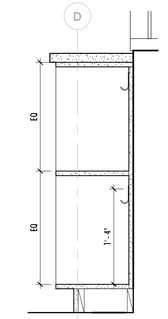

C2 L01 CUBBY
1" = 1'-0"

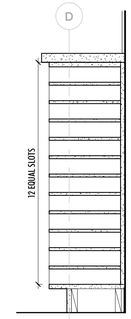

C1 WORK CUBBY
1" = 1'-0"

CASEWORK NOTES:

1. HEIGHT, DEPTH AND WIDTH PER NAAMS/ AWI CASEWORK TAG (INTERIOR ELEVATIONS)
2. FOLLOW NAAMS/ AWI STANDARDS UNLESS NOTED OTHERWISE

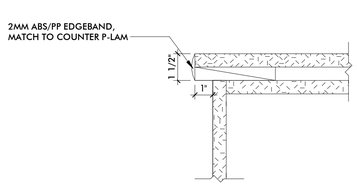

B5 COUNTER EDGE TYP
3" = 1'-0"

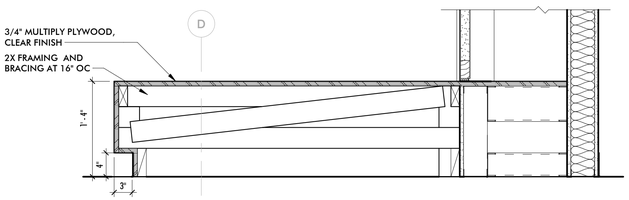

B4 BENCH AT ELECTRICAL CLOSET DTL
1" = 1'-0"

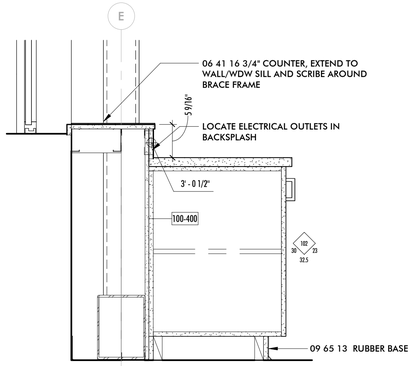

B2 CASEWORK SECTION AT BRACE FRAME
1" = 1'-0"

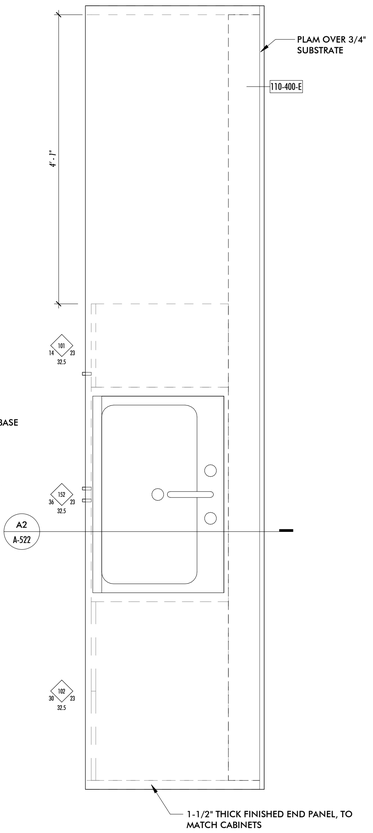

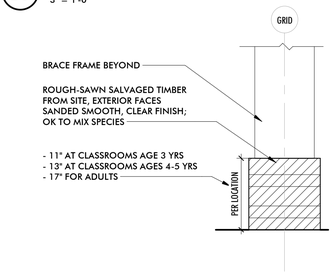

A5 BENCH AT BRACE FRAME TYP
1" = 1'-0"

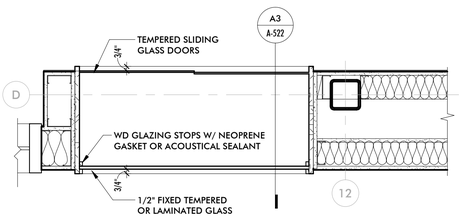

A4 PLAN DTL AT ART DISPLAY CABINET
1" = 1'-0"

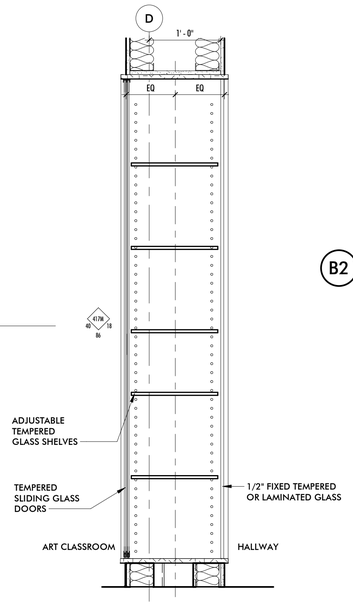

A3 DISPLAY CASE AT ART
1" = 1'-0"

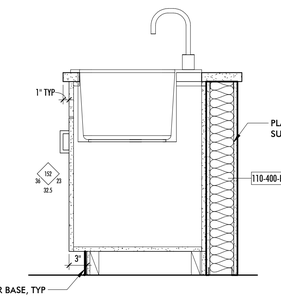

A2 ART/SCIENCE WORK STATION
1" = 1'-0"

A1 ART/SCIENCE COUNTER
1" = 1'-0"

3427 BEACON AVE S
SEATTLE 98144
ANJALI@AGRANTDESIGN.COM
206-512-4209

anjali grant design LLC

3700 E MERCER WAY
BARNABIE POINT PROJECT

NO.	DATE	DESCRIPTION
	4 JUNE 2025	BUILDING PERMIT

PROJECT:

CASEWORK DTLS

A-522

12/15/2025 1:53:20 PM C:\Users\Evelyn\Documents\BP_PSR_R24_CD_evelyn786506.rvt
© ANJALI GRANT DESIGN LLC ORIGINAL SHEET SIZE: 24" X 36"

CASEWORK

ROOM NO.	ROOM NAME	AWI/NAAWS MODEL	Depth	Height	Width	Count	Finish
						2	
		417M	1' - 6"	7' - 2"	3' - 4"	1	
002	STEM/ SCIENCE	100	1' - 11"	2' - 8 1/2"	3' - 0"	1	
002	STEM/ SCIENCE	101	1' - 11"	2' - 8 1/2"	1' - 2"	2	
002	STEM/ SCIENCE	101	1' - 11"	2' - 8 1/2"	1' - 3"	4	
002	STEM/ SCIENCE	101	1' - 11"	2' - 8 1/2"	1' - 4"	1	
002	STEM/ SCIENCE	101	1' - 11"	2' - 8 1/2"	1' - 6"	1	
002	STEM/ SCIENCE	101	1' - 11"	2' - 8 1/2"	1' - 9"	2	
002	STEM/ SCIENCE	102	1' - 11"	2' - 8 1/2"	2' - 0"	2	
002	STEM/ SCIENCE	102	1' - 11"	2' - 8 1/2"	2' - 6"	11	
002	STEM/ SCIENCE	152	1' - 11"	2' - 8 1/2"	3' - 0"	5	
002	STEM/ SCIENCE	180	1' - 11"	2' - 8 1/2"	4' - 0"	4	
002	STEM/ SCIENCE	302	1' - 0"	2' - 10"	2' - 6"	3	
002	STEM/ SCIENCE	324M	1' - 0"	2' - 10"	2' - 6"	12	
002	STEM/ SCIENCE	402	2' - 0"	7' - 2"	2' - 6"	2	
003	ART	402	2' - 0"	7' - 2"	2' - 6"	1	
005	WORKROOM	101	1' - 11"	2' - 8 1/2"	1' - 3"	1	
005	WORKROOM	102	1' - 11"	2' - 8 1/2"	2' - 6"	5	
005	WORKROOM	210M	1' - 11"	2' - 8 1/2"	2' - 6"	1	
005	WORKROOM	254	1' - 11"	2' - 8 1/2"	2' - 6"	1	
005	WORKROOM	302	1' - 0"	2' - 10"	2' - 2"	1	
005	WORKROOM	302	1' - 0"	2' - 10"	2' - 6"	3	
005	WORKROOM	326	1' - 6"	2' - 10"	2' - 6"	2	
100	VESTIBULE	427	1' - 2"	7' - 2"	6' - 2"	1	WD-CLASS B
101	MP LOBBY	500M	1' - 2"	7' - 1 1/2"	2' - 9"	7	WD-CLASS B
103A	CHAPEL	100	0' - 11"	2' - 8 1/2"	3' - 2"	5	WD
103A	CHAPEL	412M	2' - 0"	7' - 1 1/2"	2' - 6"	8	WD
110	VEST					1	
111	CIRC	317	1' - 0"	3' - 6"	4' - 0"	3	
113	CLASSROOM	100M1	1' - 0"	3' - 6"	1' - 3"	1	
113	CLASSROOM	101	1' - 11"	2' - 8 1/2"	1' - 2"	1	
113	CLASSROOM	102	1' - 11"	2' - 8 1/2"	1' - 9"	1	
113	CLASSROOM	102	1' - 11"	2' - 8 1/2"	2' - 6"	2	
113	CLASSROOM	110M	1' - 1"	3' - 6"	2' - 8"	1	
113	CLASSROOM	120M	1' - 1"	3' - 6"	4' - 0"	3	
113	CLASSROOM	301	1' - 0"	2' - 10"	1' - 2"	1	
113	CLASSROOM	302	1' - 0"	2' - 0"	2' - 6"	1	
113	CLASSROOM	302	1' - 0"	2' - 10"	1' - 9"	1	
113	CLASSROOM	302	1' - 0"	2' - 10"	2' - 6"	2	
113	CLASSROOM	402	2' - 0"	7' - 2"	2' - 6"	1	
114	ADMIN	102	1' - 11"	2' - 8 1/2"	2' - 6"	2	
114	ADMIN	211	1' - 11"	2' - 8 1/2"	1' - 8"	1	
114	ADMIN	212	1' - 11"	2' - 8 1/2"	2' - 4"	4	
114	ADMIN	301	1' - 0"	2' - 10"	1' - 8"	1	
114	ADMIN	302	1' - 0"	2' - 10"	2' - 4"	4	
114	ADMIN	302	1' - 0"	2' - 10"	2' - 6"	2	
115	CLASSROOM	100M	1' - 0"	3' - 6"	1' - 8"	2	
115	CLASSROOM	101	1' - 11"	2' - 8 1/2"	1' - 2"	1	
115	CLASSROOM	102	1' - 11"	2' - 8 1/2"	1' - 9"	1	
115	CLASSROOM	102	1' - 11"	2' - 8 1/2"	2' - 6"	2	
115	CLASSROOM	110M	1' - 1"	3' - 6"	2' - 8"	4	
115	CLASSROOM	120M	1' - 1"	3' - 6"	4' - 0"	1	
115	CLASSROOM	301	1' - 0"	2' - 10"	1' - 2"	1	
115	CLASSROOM	302	1' - 0"	2' - 0"	2' - 6"	1	
115	CLASSROOM	302	1' - 0"	2' - 10"	1' - 9"	1	
115	CLASSROOM	302	1' - 0"	2' - 10"	2' - 6"	2	
115	CLASSROOM	401	2' - 0"	7' - 2"	1' - 5"	1	
115	CLASSROOM	401M	2' - 0"	4' - 9 1/2"	1' - 0"	1	
116	CLASSROOM	100M	1' - 0"	3' - 6"	1' - 4 1/2"	1	
116	CLASSROOM	100M1	1' - 0"	3' - 6"	1' - 3"	2	
116	CLASSROOM	101	1' - 11"	2' - 8 1/2"	1' - 2"	1	
116	CLASSROOM	102	1' - 11"	2' - 8 1/2"	1' - 9"	1	
116	CLASSROOM	102	1' - 11"	2' - 8 1/2"	2' - 6"	2	
116	CLASSROOM	110M	1' - 1"	3' - 6"	2' - 8"	2	
116	CLASSROOM	120M	1' - 1"	3' - 6"	4' - 0"	2	
116	CLASSROOM	301	1' - 0"	2' - 10"	1' - 2"	1	
116	CLASSROOM	302	1' - 0"	2' - 0"	2' - 6"	1	
116	CLASSROOM	302	1' - 0"	2' - 10"	1' - 9"	1	
116	CLASSROOM	302	1' - 0"	2' - 10"	2' - 6"	2	
116	CLASSROOM	402	2' - 0"	7' - 2"	2' - 6"	1	

CASEWORK

ROOM NO.	ROOM NAME	AWI/NAAWS MODEL	Depth	Height	Width	Count	Finish
117	PRESCHOOL	102	1' - 11"	2' - 8 1/2"	2' - 6"	3	
117	PRESCHOOL	152	1' - 11"	1' - 10 1/2"	2' - 6"	1	
117	PRESCHOOL	302	1' - 0"	2' - 0"	2' - 6"	1	
117	PRESCHOOL	302	1' - 0"	2' - 10"	2' - 6"	3	
117	PRESCHOOL	302	1' - 0 3/4"	3' - 4"	2' - 6"	5	
117	PRESCHOOL	400M	1' - 0"	4' - 0"	1' - 3"	10	
117	PRESCHOOL	402M	2' - 0"	7' - 2"	4' - 2"	1	
118	PRESCHOOL	101	1' - 11"	1' - 10 1/2"	1' - 6"	1	
118	PRESCHOOL	102	1' - 11"	2' - 8 1/2"	2' - 6"	2	
118	PRESCHOOL	152	1' - 11"	1' - 10 1/2"	2' - 6"	1	
118	PRESCHOOL	301	1' - 0"	2' - 10"	1' - 6"	1	
118	PRESCHOOL	301	1' - 0"	3' - 6"	1' - 7"	1	
118	PRESCHOOL	302	1' - 0"	2' - 0"	2' - 6"	1	
118	PRESCHOOL	302	1' - 0"	2' - 10"	2' - 6"	4	
118	PRESCHOOL	302	1' - 0"	3' - 6"	2' - 6"	5	
118	PRESCHOOL	400M	1' - 0"	4' - 0"	1' - 3"	10	
118	PRESCHOOL	402M	2' - 0"	7' - 2"	4' - 2"	1	
118B	TLT	102	1' - 7"	2' - 8 1/2"	2' - 6"	2	
202	CLASSROOM	101	<varies>	2' - 8 1/2"	1' - 6"	2	
202	CLASSROOM	102	<varies>	2' - 8 1/2"	2' - 6"	2	
202	CLASSROOM	301	1' - 0"	2' - 10"	1' - 6"	2	
202	CLASSROOM	302	1' - 0"	2' - 0"	2' - 6"	1	
202	CLASSROOM	302	1' - 0"	2' - 10"	2' - 6"	2	
202	CLASSROOM	402	2' - 0"	7' - 2"	2' - 6"	1	
203	CLASSROOM	101	<varies>	2' - 8 1/2"	1' - 6"	2	
203	CLASSROOM	102	<varies>	2' - 8 1/2"	2' - 6"	2	
203	CLASSROOM	301	1' - 0"	2' - 10"	1' - 6"	2	
203	CLASSROOM	302	1' - 0"	2' - 0"	2' - 6"	1	
203	CLASSROOM	302	1' - 0"	2' - 10"	2' - 6"	2	
203	CLASSROOM	401	2' - 0"	7' - 2"	1' - 5"	1	
203	CLASSROOM	401M	2' - 0"	4' - 9 1/2"	1' - 0"	1	
204	CLASSROOM	101	<varies>	2' - 8 1/2"	1' - 6"	2	
204	CLASSROOM	102	<varies>	2' - 8 1/2"	2' - 6"	2	
204	CLASSROOM	301	1' - 0"	2' - 10"	1' - 6"	2	
204	CLASSROOM	302	1' - 0"	2' - 0"	2' - 6"	1	
204	CLASSROOM	302	1' - 0"	2' - 10"	2' - 6"	2	
204	CLASSROOM	402	2' - 0"	7' - 2"	2' - 6"	1	
206	CLASSROOM	100M1	1' - 0"	4' - 11"	1' - 3"	11	
206	CLASSROOM	101	1' - 7"	2' - 8 1/2"	1' - 6"	1	
206	CLASSROOM	102	1' - 11"	2' - 8 1/2"	2' - 3"	2	
206	CLASSROOM	102	1' - 7"	2' - 8 1/2"	2' - 6"	1	
206	CLASSROOM	301	1' - 0"	2' - 10"	1' - 6"	1	
206	CLASSROOM	302	1' - 0"	2' - 10"	2' - 3"	2	
206	CLASSROOM	302	1' - 0"	2' - 10"	2' - 4"	1	
206	CLASSROOM	302	1' - 0"	2' - 10"	2' - 6"	1	
206	CLASSROOM	401	2' - 0"	7' - 2"	1' - 5"	1	
207	CLASSROOM	100M1	1' - 0"	4' - 11"	1' - 3"	11	
207	CLASSROOM	101	<varies>	2' - 8 1/2"	1' - 6"	2	
207	CLASSROOM	102	<varies>	2' - 8 1/2"	2' - 6"	2	
207	CLASSROOM	301	1' - 0"	2' - 10"	1' - 6"	2	
207	CLASSROOM	302	1' - 0"	2' - 0"	2' - 6"	1	
207	CLASSROOM	302	1' - 0"	2' - 10"	2' - 6"	2	
207	CLASSROOM	402	2' - 0"	7' - 2"	2' - 6"	1	
211A	BREAK ROOM	210M	1' - 11"	2' - 8 1/2"	2' - 6"	1	
211A	BREAK ROOM	302	1' - 0"	2' - 10"	2' - 0"	4	
300	CIRC	102	1' - 11"	2' - 8 1/2"	2' - 5"	1	
300	CIRC	102	1' - 11"	2' - 8 1/2"	2' - 6"	1	
300	CIRC	210M	1' - 11"	2' - 8 1/2"	2' - 6"	1	
300	CIRC	302	1' - 0"	2' - 10"	2' - 6"	4	
301D	ENTRY/ART/STEM	101	1' - 11"	2' - 8 1/2"	1' - 7"	1	
301D	ENTRY/ART/STEM	102	1' - 11"	2' - 8 1/2"	2' - 6"	1	
301D	ENTRY/ART/STEM	210M	1' - 11"	2' - 8 1/2"	2' - 6"	1	
301D	ENTRY/ART/STEM	254	1' - 11"	2' - 8 1/2"	2' - 6"	1	
301D	ENTRY/ART/STEM	302	1' - 0"	2' - 10"	2' - 4"	2	
301D	ENTRY/ART/STEM	302	1' - 0"	2' - 10"	2' - 6"	1	
303	ENTRY	102	1' - 11"	2' - 8 1/2"	1' - 7"	1	
303	ENTRY	102	1' - 11"	2' - 8 1/2"	2' - 0"	2	
303	ENTRY	302	1' - 0"	2' - 10"	1' - 8"	1	
303	ENTRY	302	1' - 0"	2' - 10"	2' - 0"	1	
303	ENTRY	302	1' - 0"	2' - 10"	2' - 1"	1	
303	ENTRY	302	1' - 0"	2' - 10"	2' - 6"	1	

COLOR SCHEDULE

CPT-1	SHAWCONTRACT 5T054 54752 BROWN
CPT-2	OFFICE (TBD)
CPT-3	RENTAL (TBD)
CT-1	ADULT RESTROOM TILE FLOOR (TBD)
CT-2	KIDS RESTROOM TILE FLOOR (TBD)
CT-3	ADULT RESTROOM TILE WALL (TBD)
CT-4	KIDS RESTROOM TILE WALL (TBD)
EPOXY	KITCHEN(TBD)
FRL-1	RESTROOM(TBD)
LIN-1	FORBO 3641 EGGSHELL
LIN-2	FORBO 3763 BLUE SHIMMER
LIN-3	FORBO 3224 CHARTREUSE
LIN-4	FORBO3433 ROCKPOOL
LIN-5	L03 CIRC(TBD)
PL-1	WILSONART D91K-18 SLATE GREY
PL-2	FORMICA 5349 FOSSIL
PL-3	WILSONART 10657 GRAPHITE
PL-4	WILSONART 7939 BLONDE ECHO
PL-5	WILSONART Y0644-60 DUBLIN CROSSWEAVE

FINISH SELECTIONS ARE PRELIMINARY. ALL FINISHES TO BE CONFIRMED WITH OWNER AND ARCHITECT

COLOR SCHEDULE

PL-6	FORMICA 8844-WR AGED ASH
PT-1	BENJAMIN MOORE OC-59 VANILLA MILKSHAKE
PT-2	BENJAMIN MOORE CW-590 WILLIAMSBURG WYTHE BLUE
PT-2	BENJAMIN MOORE 712 FORT PIERCE GREEN
PT-3	BENJAMIN MOORE406 HUNTINGTON GREENE
PT-4	BENJAMIN MOORE405 PERENNIAL
PT-5	CHAPEL DARK ACCENT (TBD)
PT-6	DOORFRAME (GREY TBD)
PT-7	ACCENT BRACE FRAME(TBD)
RB-1	NORAPLAN ENVIRONCARE IRISH MOSS
RB-2	ART ROOM (TBD)
SF-1	PULASTIC CLASSIC 110 SPORTS FLOOR(TBD)
TA-1	FORBO 2162 DUCK EGG
TA-2	FORBO 2182 POTATO SKIN
TA-3	FORBO 2187 BROWN RICE
WB-1	JOHNSONITE 121 CEMENT
WOM-1	VESTIBULE(TBD)

ROOM FINISH SCHEDULE

ROOM NO.	ROOM NAME	FINISH: WALL (U.N.O.)	FINISH: FLOOR	FINISH: BASE	ROOM FINISH NOTES
B01					
001	CIRC	GWB-PT	LINO-1	RB	SEE ELEVATIONS FOR APPLIED WALL PANELS
001A	W/D	GWB-PT	CONC-S	RB	
001B	TLT	CT/GWB-PT	CT-2	CT	
001C	TLT	CT/GWB-PT	CT-2	CT	
001D	TLT	CT/GWB-PT	CT-2	CT	
001E	MOP	GWB-PT	CONC-S	RB	
002	STEM/ SCIENCE	GWB-PT	RUBBER	RB	SEE ELEVATIONS FOR APPLIED WALL PANELS; SLOPE FLOOR TO DRAIN AT SHOWER
002A	STOR	GWB-PT	CONC-S	RB	
002B	ELECTRICAL	GWB-PT	CONC-S	RB	
003	ART	GWB-PT	RUBBER	RB	SEE ELEVATIONS FOR APPLIED WALL PANELS
003A	KILN	FRP	RUBBER	RB	
004	FACULTY	GWB-PT	CPT-2	RB	
005	WORKROOM	GWB-PT	CPT-2	RB	
006	CONFERENCE	GWB-PT	CPT-2	RB	
006A	STORAGE	GWB-PT	CONC-S	RB	
007	MEP/STOR	GWB-PT	CONC-S	RB	
008	MP STORAGE	GWB-PT	CONC-S	RB	
008A	MDF	GWB-PT	CONC-S	RB	
008B	SPRINKLER	GWB-PT	CONC-S	RB	
009	TLT	CT/GWB-PT	CT-2	CT	
ELEV	ELEV		LINO-1		
SW-0	WEST STAIR	GWB-PT	CONC-S	RB	
L01					
010	TRASH ENCLOSURE	--	CONC, SEALED	--	
100	VESTIBULE	GWB-PT	WOM	RB	CLASS B INTERIOR FINISHES REQUIRED
101	MP LOBBY	GWB-PT	LINO-1	RB	CLASS B INTERIOR FINISHES REQUIRED
101A	MOP	FRP/GWB-PT	CONC-S	RB	FRP TO 4' AFF
102	KITCHEN	FRP	EPOXY	SC	
103A	CHAPEL	GWB-PT	CPT-1	WD/REVEAL (S)	SEE ELEVATIONS FOR APPLIED WALL PANELS
103B	GYM/MULTI	GWB-PT	RAF	RB	SEE ELEVATIONS FOR APPLIED WALL PANELS
103C	STORAGE	GWB-PT	CPT-1	RB	
103D	STOR	GWB-PT	CONC, SEALED	RB	
103E	STORAGE	GWB-PT	CONC-S	RB	
104	WOMEN'S TLTS	CT/GWB-PT	CT-1	CT	SLOPE FLOOR TO DRAIN
105	MEN'S TLTS	CT/GWB-PT	CT-1	CT	SLOPE FLOOR TO DRAIN
106	VEST	GWB-PT	WOM	RB	
107	OFFICE	GWB-PT	CPT-2	RB	
110	VEST	GWB-PT	WOM	RB	
111	CIRC	GWB-PT	LINO-1	RB	SEE ELEVATIONS FOR APPLIED WALL PANELS
111A	TLT	CT/GWB-PT	CT-2	CT	
111B	TLTS	CT/GWB-PT	CT-2	CT	
111C	TLT	CT/GWB-PT	CT-2	CT	
111D	EC	GWB-PT	CONC-S	RB	
112	OFF	GWB-PT	CPT-2	RB	
113	CLASSROOM	GWB-PT	LINO-2	RB	SEE ELEVATIONS FOR APPLIED WALL PANELS
114	ADMIN	GWB-PT	CPT-2	RB	
114A	OFF	GWB-PT	CPT-2	RB	
114B	OFF	GWB-PT	CPT-2	RB	
114C	OFF	GWB-PT	CPT-2	RB	
114D	OFF	GWB-PT	CPT-2	RB	
115	CLASSROOM	GWB-PT	LINO-2	RB	SEE ELEVATIONS FOR APPLIED WALL PANELS
116	CLASSROOM	GWB-PT	LINO-2	RB	SEE ELEVATIONS FOR APPLIED WALL PANELS
117	PRESCHOOL	GWB-PT	LINO-2	RB	SEE ELEVATIONS FOR APPLIED WALL PANELS
117A	TLT	CT/GWB-PT	CT-2	CT	
117B	TLT	CT/GWB-PT	CT-2	CT	
118	PRESCHOOL	GWB-PT	LINO-2	RB	SEE ELEVATIONS FOR APPLIED WALL PANELS
118A	TLT	CT/GWB-PT	CT-2	CT	
118B	TLT	CT/GWB-PT	CT-2	CT	
119	LRC-1	GWB-PT	LINO-2	RB	SEE ELEVATIONS FOR APPLIED WALL PANELS
SE-1	EAST STAIR	GWB-PT	CONC-S	RB	
SW-1	WEST STAIR	GWB-PT	CONC-S	RB	

TACKBOARD

ROOM NO.	ROOM NAME	WIDTH	AREA
001	CIRC	2' - 0"	14 SF
001	CIRC	2' - 0"	14 SF
001	CIRC	3' - 10"	26 SF
001	CIRC	4' - 0"	27 SF
001	CIRC	4' - 0"	27 SF
001	CIRC	4' - 0"	27 SF
001	CIRC	4' - 0"	27 SF
001	CIRC	4' - 0"	27 SF
001	CIRC	4' - 0"	27 SF
001	CIRC	4' - 0"	27 SF
002	STEM/ SCIENCE	3' - 11"	27 SF
002	STEM/ SCIENCE	3' - 11"	27 SF
002	STEM/ SCIENCE	4' - 0"	27 SF
002	STEM/ SCIENCE	4' - 0"	27 SF
002	STEM/ SCIENCE	4' - 0"	27 SF
002	STEM/ SCIENCE	4' - 0"	27 SF
002	STEM/ SCIENCE	4' - 0"	27 SF
002	STEM/ SCIENCE	4' - 0"	39 SF
002	STEM/ SCIENCE	4' - 0"	39 SF
003	ART	2' - 0"	17 SF
003	ART	2' - 0"	17 SF
003	ART	4' - 0"	34 SF
111	CIRC	2' - 0"	17 SF
111	CIRC	2' - 0"	17 SF
111	CIRC	2' - 0"	17 SF
111	CIRC	4' - 0"	35 SF
111	CIRC	4' - 0"	35 SF
113	CLASSROOM	4' - 0"	21 SF
113	CLASSROOM	4' - 0"	21 SF
115	CLASSROOM	4' - 0"	22 SF
115	CLASSROOM	4' - 0"	22 SF
116	CLASSROOM	4' - 0"	21 SF
116	CLASSROOM	4' - 0"	21 SF
200	CIRC	2' - 0"	17 SF
200	CIRC	1' - 4"	12 SF
200	CIRC	4' - 0"	35 SF
200	CIRC	4' - 0"	35 SF
200	CIRC	4' - 0"	35 SF
200	CIRC	4' - 0"	35 SF
200	CIRC	4' - 0"	35 SF
200	CIRC	4' - 0"	35 SF
200A	LIBRARY	4' - 0"	31 SF
203	CLASSROOM	4' - 0"	26 SF
203	CLASSROOM	4' - 0"	26 SF
203	CLASSROOM	4' - 0"	26 SF
204	CLASSROOM	4' - 0"	36 SF
204	CLASSROOM	4' - 0"	36 SF
204	CLASSROOM	4' - 0"	36 SF

ACOUSTICAL WALL PANELS

ROOM NO.	ROOM NAME	TYPE	AREA
103A	CHAPEL	AWP-VERTICAL WD SLAT	160 SF
103A	CHAPEL	AWP-VERTICAL WD SLAT	81 SF
103A	CHAPEL	AWP-VERTICAL WD SLAT	72 SF
103A	CHAPEL	AWP-VERTICAL WD SLAT	224 SF
103A	CHAPEL	AWP-VERTICAL WD SLAT	94 SF
103A	CHAPEL	AWP-VERTICAL WD SLAT	99 SF
103A			730 SF
103B	GYM/MULTI	AWP-FABRIC	37 SF
103B	GYM/MULTI	AWP-FABRIC	271 SF
103B	GYM/MULTI	AWP-FABRIC	11 SF
103B	GYM/MULTI	AWP-FABRIC	18 SF
103B	GYM/MULTI	AWP-FABRIC	22 SF
103B	GYM/MULTI	AWP-FABRIC	24 SF
103B	GYM/MULTI	AWP-FABRIC	35 SF
103B	GYM/MULTI	AWP-FABRIC	41 SF
103B	GYM/MULTI	AWP-FABRIC	953 SF
103B	GYM/MULTI	AWP-FABRIC	60 SF
103B			1472 SF

ROOM FINISH SCHEDULE

ROOM NO.	ROOM NAME	FINISH: WALL (U.N.O.)	FINISH: FLOOR	FINISH: BASE	ROOM FINISH NOTES
L02					
200	CIRC	GWB-PT	LINO-1	RB	SEE ELEVATIONS FOR APPLIED WALL PANELS
200A	LIBRARY	GWB-PT	LINO-2	RB	SEE ELEVATIONS FOR APPLIED WALL PANELS
200B	TLT	CT/GWB-PT	CT-2	CT	
200C	TLT	CT/GWB-PT	CT-2	CT	
200D	TLT	CT/GWB-PT	CT-2	CT	
200E	TLT	CT/GWB-PT	CT-2	CT	
200F	IDF	GWB-PT	CONC-S	RB	
200G	MOP	FRP/GWB-PT	CONC-S	RB	FRP TO 4' AFF
200H	EC	GWB-PT	CONC-S	RB	
201	TLT	CT/GWB-PT	CT-2	CT	
202	CLASSROOM	GWB-PT	LINO-2	RB	SEE ELEVATIONS FOR APPLIED WALL PANELS
203	CLASSROOM	GWB-PT	LINO-2	RB	SEE ELEVATIONS FOR APPLIED WALL PANELS
204	CLASSROOM	GWB-PT	LINO-2	RB	SEE ELEVATIONS FOR APPLIED WALL PANELS
205	LRC-2	GWB-PT	LINO-2	RB	SEE ELEVATIONS FOR APPLIED WALL PANELS
206	CLASSROOM	GWB-PT	LINO-2	RB	SEE ELEVATIONS FOR APPLIED WALL PANELS
207	CLASSROOM	GWB-PT	LINO-2	RB	SEE ELEVATIONS FOR APPLIED WALL PANELS
211	CIRC	GWB-PT	LINO-1	RB	SEE ELEVATIONS FOR APPLIED WALL PANELS
211A	BREAK ROOM	GWB-PT	LINO-1	RB	SEE ELEVATIONS FOR APPLIED WALL PANELS
211B	MOP	FRP/GWB-PT	CONC-S	RB	FRP TO 4' AFF
211C	TLT	CT/GWB-PT	CT-2	CT	
211D	TLT	CT/GWB-PT	CT-2	CT	
212	RENTAL	GWB-PT	CPT-3	RB	
212A	CONF ROOM	GWB-PT	CPT-3	RB	
212B	OFFICE	GWB-PT	CPT-3	RB	
213	RENTAL	GWB-PT	CPT-3	RB	
213A	CONF ROOM	GWB-PT	CPT-3	RB	
213B	WORKRM	GWB-PT	CPT-3	RB	
213C	OFFICE	GWB-PT	CPT-3	RB	
213D	MECH MEZZ	GWB-PT	CONC-S	RB	
SE-2	EAST STAIR	GWB-PT	CONC-S	RB	
SW-2	WEST STAIR	GWB-PT	CONC-S	RB	
L03					
300	CIRC	GWB-PT	LINO-1	RB	SEE ELEVATIONS FOR APPLIED WALL PANELS
300A	TLT	CT/GWB-PT	CT-2	CT	
300B	TLT	CT/GWB-PT	CT-2	CT	
300C	TLT	CT/GWB-PT	CT-2	CT	
300D	JC	GWB-PT	CONC-S	RB	
300E	IDF	GWB-PT	CONC-S	RB	
300F	RENTAL OFFICE	GWB-PT	CPT-3	RB	
300G	TLT	CT/GWB-PT	CT-2	CT	
301A	OFFICE	GWB-PT	CPT-3	RB	
301B	OFFICE	GWB-PT	CPT-3	RB	
301C	OFFICE	GWB-PT	CPT-3	RB	
301D	ENTRY/ART/STEM	GWB-PT	CPT-3	RB	
301E	SNOEZELEN RM	GWB-PT	CPT-3	RB	
301F	MUSIC	GWB-PT	CPT-3	RB	
301G	GAME/TECH	GWB-PT	CPT-3	RB	
301H	OFFICE	GWB-PT	CPT-3	RB	
302	RENTAL	GWB-PT	CPT-3	RB	
302A	OFFICE	GWB-PT	CPT-3	RB	
302B	OFFICE	GWB-PT	CPT-3	RB	
302C	OFFICE	GWB-PT	CPT-3	RB	
302D	OFFICE	GWB-PT	CPT-3	RB	
302E	STOR	GWB-PT	CPT-3	RB	
302F	STOR	GWB-PT	CPT-3	RB	
303	ENTRY	GWB-PT	CPT-3	RB	
303A	CONF ROOM	GWB-PT	CPT-3	RB	
303B	OFF/PHONE	GWB-PT	CPT-3	RB	
303C	COO	GWB-PT	CPT-3	RB	
303D	DEV/COMM	GWB-PT	CPT-3	RB	
303E	PROGRAM OFFICE	GWB-PT	CPT-3	RB	
303F	EXEC OFFICE	GWB-PT	CPT-3	RB	
SE-3	EAST STAIR	GWB-PT	CONC-S	RB	
SW-3	WEST STAIR	GWB-PT	CONC-S	RB	

FINISH REQUIREMENTS PER TABLE 803.13

GROUP A-3
- B AT CORRIDORS & EXIT WAYS
- C AT ROOMS AND ENCLOSED SPACES

GROUPS B, E
- B AT INTERIOR STAIRS
- C AT CORRIDORS, ROOMS AND ENCLOSED SPACES

803.15.1.1 Furred Construction
If the interior finish material is applied to furring strips, the intervening spaces between such furring strips shall:
be filled with material that is inorganic/noncombustible; be filled with material that meets the requirements of a Class A material per Section 803.1.1/803.1.2; be fireblocked at not greater than 8 feet in every direction in accordance with Section 718; OR the materials used to create the concealed space shall be noncombustible.

806.2 Combustible Decorative Materials
Fixed or movable walls and partitions, paneling, wall pads and crash pads ... shall comply with Section 803.

FINISH LEGEND

ACT	09 51 13 ACOUSTICAL CEILING TILE
BC	09 29 00 BULLNOSE CORNER
CG	CORNER GUARD
CONC-S	03 30 00 SEALED CONCRETE
CPT	09 68 13 CARPET TILE
CT	09 30 00 CERAMIC TILE
EPOXY	09 67 23 EPOXY COATING SYSTEM
FRL	06 83 00 FIBERGLASS REINFORCED LAMINATE
FRP	06 83 00 FIBERGLASS REINFORCED PANEL
GB, GWB	09 29 00 GYPSUM BOARD
HPL	06 41 16 HIGH-PRESSURE LAMINATE (CASEWORK SHALL BE HPL UNLESS NOTED AS WD)
LINO	09 65 43 LINOLEUM
PT	09 90 00 PAINT
RB	09 65 13 RUBBER BASE
RUBBER	09 65 19 RUBBER SHEET FLOORING
SC	SELF-COVE
RAF	09 65 66 RESILIENT ATHLETIC FLOORING
WD	06 41 13 WOOD (CLASS B FLAME SPREAD/SMOKE-DEVELOPED INDEX WHERE INDICATED)
WOM	12 48 13 WALK OFF MAT

AT AREAS WHERE FLOORS ARE SLOPED TO DRAIN:
FINISH FLOOR SHALL SLOPE NO MORE THAN 1:20 IN ONE DIRECTION AND NO MORE THAN 1:48 IN THE CROSS DIRECTION
WITHIN THE WHEELCHAIR TURNING SPACE, FLOOR SHALL SLOPE NO MORE THAN 1:48

3427 BEACON AVE S
SEATTLE 98144
ANJALI@AGRANTDESIGN.COM
206-512-4209

anjali grant design LLC

3700 E MERCER WAY
BARNABIE POINT PROJECT

NO.	DATE	DESCRIPTION
1	10/22/2025	BLDG PERMIT CORRECTIONS

4 JUNE 2

DOOR & FRAME SCHEDULE - EXTERIOR

DOOR NO.	OPERATION	HARDWARE	DOOR PANEL						DOOR FRAME								NFRC VALUES		
			TYPE	MATL	FINISH	WIDTH	HEIGHT	THICKNESS	TYPE	MATL	FINISH	HEAD	JAMB	SILL	UL LABEL	COMMENTS	U-FACTOR	VT	SHGC
B01																			
002.2	SWING	06 (AC, NR)	EXT-S-FG	AL	PVDF	4' - 0"	7' - 0"	0' - 2 1/4"	PER ELEVS	AL	FF	C1/A-502	A1/A-502	B2/A-501	N/A		0.60		0.33 MAX
002B.2	SWING	09 (AC, NR)	S-F	HM	PT	3' - 6"	7' - 0"	0' - 1 3/4"	HM-1	HM	PT	B2/A-503	A2/ A-503	B2/1-503	N/A		0.37		
003.2	SWING	06 (AC, NR)	EXT-S-FG	AL	PVDF	3' - 0"	7' - 0"	0' - 2 1/4"	PER ELEVS	AL	FF	C1/A-502	A1/A-502	B2/A-501	N/A		0.60		0.33 MAX
GATE-1	SWING-DBL	16A	GATE	STL	PVDF	10' - 6"	6' - 8"	0' - 1"	TS FRAME	STL	PT	3/A-353	6/A-353	3/A-353	N/A	WIDTH IS SIZE OF OPENING			
GATE-2	SWING-DBL	16A	GATE	STL	PVDF	8' - 7"	6' - 8"	0' - 1"		STL	PT	3/A-353	6/A-353	3/A-353		WIDTH IS SIZE OF OPENING			
L01																			
100.1	SWING-DBL	18 (PH, AC, NR)	EXT-D-FG	AL	PVDF	6' - 10"	7' - 0"	0' - 2 1/4"	PER ELEVS	AL	FF	C1/A-502	A1/A-502	B2/A-501	N/A		0.60		
103A.2	SWING	21 (PH, NR)	EXT-S-FG	AL	PVDF	3' - 6"	7' - 0"	0' - 2 1/4"	PER ELEVS	AL	FF	C1/A-502	A1/A-502	B2/A-501	N/A		0.60		0.33 MAX
103A.3	SWING	21 (PH, NR)	EXT-S-FG	AL	PVDF	3' - 6"	7' - 0"	0' - 2 1/4"	PER ELEVS	AL	FF	C1/A-502	A1/A-502	B2/A-501	N/A		0.60		0.33 MAX
103B.2	SWING	21 (PH, NR)	EXT-S-FG	AL	PVDF	3' - 6"	7' - 0"	0' - 2 1/4"	PER ELEVS	AL	FF	C1/A-502	A1/A-502	B2/A-501	N/A		0.60		0.33 MAX
106	SWING	29 (PH, AC, NR)	EXT-S-FG	AL	PVDF	3' - 0"	7' - 0"	0' - 2 1/4"	PER ELEVS	AL	FF	C1/A-502	A1/A-502	B1/A-501	N/A		0.60		0.33 MAX
110.1	SWING-DBL	18 (PH, AC, NR)	EXT-D-FG	AL	PVDF	6' - 0"	7' - 0"	0' - 2 1/4"	PER ELEVS	AL	FF	C1/A-502	A1/A-502	B1/A-501	N/A		0.60		0.33 MAX
117.2	SWING	35 (AC, NR)	EXT-S-FG	AL	PVDF	3' - 0"	7' - 0"	0' - 2 1/4"	PER ELEVS	AL	FF	C1/A-502	A1/A-502	B1/A-501	N/A		0.60		0.33 MAX
118.3	SWING	35 (AC, NR)	EXT-S-FG	AL	PVDF	3' - 0"	7' - 0"	0' - 2 1/4"	PER ELEVS	AL	FF	C1/A-502	A1/A-502	B1/A-501	N/A		0.60		0.33 MAX
SE-1.1	SWING	09 (PH, NR)	S-F	HM	PT	4' - 0"	7' - 0"	0' - 1 3/4"	HM-1	HM	PT	B2/A-503	A2/ A-503	B1/A-501	N/A		0.37		
SW-1.2	SWING	09 (PH, NR)	S-F	HM	PT	4' - 0"	7' - 0"	0' - 1 3/4"	HM-1	HM	PT	B2/A-503	A2/ A-503	B1/A-501	N/A		0.37		
L03																			
300	SWING	40	S-F	HM	PT	3' - 0"	7' - 0"	0' - 1 3/4"	HM-9	HM	PT	B2/A-503	A2/ A-503	D3/A-503	N/A		0.37		
ROOF TOS @ GRID A																			
GATE-5	SWING	16A	GATE	STL	PVDF	5' - 7 3/4"	8' - 10 1/2"	0' - 1"	TS FRAME	STL	PT	3/A-353 SIM	6/A-353 SIM	3/A-353 SIM	N/A	WIDTH IS SIZE OF OPENING			

WINDOW SCHEDULE EXTERIOR

TYPE MARK	Count	ROUGH OPENING				ORIENTATION	ASSEMBLY SOUND RATING	NFRC VALUES		
		WIDTH	HEIGHT	SILL HEIGHT	HEAD HEIGHT			SHGC	U-FACTOR	VT
SK-1	4	4' - 2 1/2"	4' - 2 1/2"				STC-35	0.28	U-0.48 MAX	0.64 MIN
W1	4	6' - 2"	7' - 6"	2' - 6"	10' - 0"	SOUTH	STC-30	0.33 MAX	U-0.26 MAX	
W1.1L	1	6' - 2"	6' - 10"	2' - 6"	9' - 4"	WEST	STC-37	0.33 MAX	U-0.26 MAX	
W1.1LL	2	6' - 2"	6' - 10"	3' - 2"	10' - 0"	NORTH	STC-42	0.33 MAX	U-0.26 MAX	
W1.2	7	6' - 2"	6' - 6"	2' - 6"	9' - 0"	SOUTH	STC-30	0.33 MAX	U-0.26 MAX	
W1.2L	1	6' - 2"	6' - 6"	2' - 6"	9' - 0"	EAST	STC-37	0.33 MAX	U-0.26 MAX	
W1.2L	9	6' - 2"	6' - 6"	2' - 6"	9' - 0"	NORTH	STC-37	0.33 MAX	U-0.26 MAX	
W1.2L	2	6' - 2"	6' - 6"	2' - 6"	9' - 0"	WEST	STC-37	0.33 MAX	U-0.26 MAX	
W1.3	3	6' - 2"	6' - 10"	2' - 6"	9' - 4"	SOUTH	STC-30	0.33 MAX	U-0.26 MAX	
W1.4L	1	7' - 9"	5' - 10"	2' - 6"	8' - 4"	NORTH	STC-37	0.33 MAX	U-0.26 MAX	
W1L	1	6' - 2"	7' - 6"	2' - 6"	10' - 0"	NORTH	STC-37	0.33 MAX	U-0.26 MAX	
W1L	2	6' - 2"	7' - 6"	2' - 6"	10' - 0"	WEST	STC-37	0.33 MAX	U-0.26 MAX	
W1LL	6	6' - 2"	7' - 6"	2' - 6"	10' - 0"	NORTH	STC-42	0.33 MAX	U-0.26 MAX	
W2	3	6' - 2"	7' - 6"	2' - 6"	10' - 0"	SOUTH	STC-30	0.33 MAX	U-0.26 MAX	
W2.1	4	6' - 2"	6' - 6"	2' - 6"	9' - 0"	SOUTH	STC-30	0.33 MAX	U-0.26 MAX	
W2.1L	2	6' - 2"	6' - 6"	2' - 6"	9' - 0"	EAST	STC-37	0.33 MAX	U-0.26 MAX	
W2.2	2	6' - 2"	6' - 10"	2' - 6"	9' - 4"	SOUTH	STC-30	0.33 MAX	U-0.26 MAX	
W2.3	1	6' - 2"	7' - 0"	2' - 6"	9' - 6"	SOUTH	STC-30	0.33 MAX	U-0.26 MAX	
W2L	1	6' - 2"	7' - 6"	2' - 6"	10' - 0"	NORTH	STC-37	0.33 MAX	U-0.26 MAX	
W3L	3	3' - 1"	7' - 6"	2' - 6"	10' - 0"	NORTH	STC-37	0.33 MAX	U-0.26 MAX	
W3L	1	3' - 1"	7' - 6"	2' - 6"	10' - 0"	SOUTH	STC-37	0.33 MAX	U-0.26 MAX	
W4	4	3' - 1"	7' - 6"	2' - 6"	10' - 0"	SOUTH	STC-30	0.33 MAX	U-0.26 MAX	
W4.1L	1	3' - 1"	6' - 10"	2' - 6"	9' - 4"	WEST	STC-37	0.33 MAX	U-0.26 MAX	
W4.1LL	3	3' - 1"	6' - 10"	3' - 2"	10' - 0"	NORTH	STC-42	0.33 MAX	U-0.26 MAX	
W4.2	5	3' - 1"	6' - 6"	2' - 6"	9' - 0"	SOUTH	STC-30	0.33 MAX	U-0.26 MAX	
W4.2L	2	3' - 1"	6' - 6"	2' - 6"	9' - 0"	EAST	STC-37	0.33 MAX	U-0.26 MAX	
W4.2L	5	3' - 1"	6' - 6"	2' - 6"	9' - 0"	NORTH	STC-37	0.53 MAX	U-0.26 MAX	
W4.2L	2	3' - 1"	6' - 6"	2' - 6"	9' - 0"	WEST	STC-37	0.33 MAX	U-0.26 MAX	
W4.3	2	3' - 1"	6' - 10"	2' - 6"	9' - 4"	SOUTH	STC-30	0.33 MAX	U-0.26 MAX	
W4.4	1	5' - 0"	6' - 6"	2' - 6"	9' - 0"	SOUTH	STC-30	0.33 MAX	U-0.26 MAX	
W4L	3	3' - 1"	7' - 6"	2' - 6"	10' - 0"	NORTH	STC-37	0.33 MAX	U-0.26 MAX	
W4L	2	3' - 1"	7' - 6"	2' - 6"	10' - 0"	WEST	STC-37	0.33 MAX	U-0.26 MAX	
W4LL	6	3' - 1"	7' - 6"	2' - 6"	10' - 0"	NORTH	STC-42	0.53 MAX	U-0.26 MAX	
W5.1LL	1	6' - 2"	6' - 10"	3' - 2"	10' - 0"	NORTH	STC-42	0.33 MAX	U-0.26 MAX	
W5.2	4	6' - 2"	6' - 6"	2' - 6"	9' - 0"	SOUTH	STC-30	0.33 MAX	U-0.26 MAX	
W5.2L	9	6' - 2"	6' - 6"	2' - 6"	9' - 0"	NORTH	STC-37	0.33 MAX	U-0.26 MAX	
W5.2L	1	6' - 2"	6' - 6"	2' - 6"	9' - 0"	WEST	STC-37	0.33 MAX	U-0.26 MAX	
W5.3	1	6' - 2"	4' - 8"	2' - 6"	7' - 2"	SOUTH	STC-30	0.33 MAX	U-0.26 MAX	
W5L	1	6' - 2"	7' - 6"	2' - 6"	10' - 0"	NORTH	STC-37	0.33 MAX	U-0.26 MAX	
W5LL	6	6' - 2"	7' - 6"	2' - 6"	10' - 0"	NORTH	STC-42	0.33 MAX	U-0.26 MAX	
W6.1LL	1	3' - 1"	6' - 10"	3' - 2"	10' - 0"	NORTH	STC-42	0.33 MAX	U-0.26 MAX	

LOUVER SCHEDULE

MARK	COUNT	WIDTH	HEIGHT
L1	1	2' - 6"	0' - 10"
L2	2	1' - 4"	2' - 0"
L3	1	3' - 0"	1' - 6"
L4	1	1' - 8"	1' - 2"
L5	4	2' - 0"	1' - 2"
L6	1	2' - 6"	1' - 2"
L7	1	2' - 0"	2' - 0"
L8	1	2' - 8"	2' - 6"
L9	1	3' - 10"	2' - 4"
L10	1	3' - 8"	1' - 2"
L11	1	3' - 8"	1' - 4"
L12	2	2' - 6"	1' - 0"
L13	1	1' - 4"	2' - 6"

Grand total: 18



SKYLIGHT LEGEND

1/4" = 1'-0"

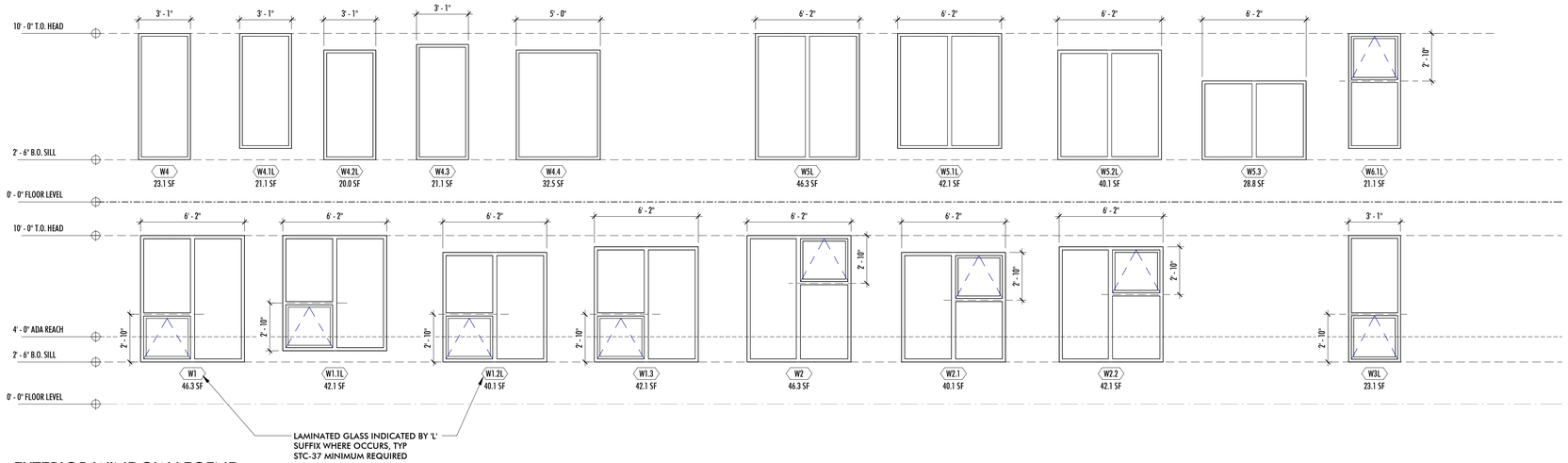

1 EXTERIOR WINDOW LEGEND

1/4" = 1'-0"

anjali grant design LLC
3427 BEACON AVE S
SEATTLE 98144
ANJALI@AGRANTDESIGN.COM
206-512-4209

3700 E MERCER WAY
BARNABIE POINT PROJECT

NO.	DATE	DESCRIPTION
	4 JUNE 2025	BUILDING PERMIT

PROJECT:

EXT OPENINGS & SCHEDULE

A-602

12/15/2025 11:38:12 AM C:\Users\EatherY\Desktop\BPP_PSB_R24_CD_eatherY.rvt
© ANJALI GRANT DESIGN LLC ORIGINAL SHEET SIZE: 24" X 36"

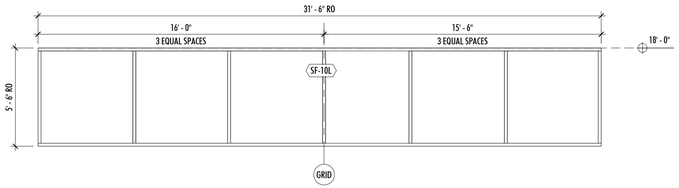

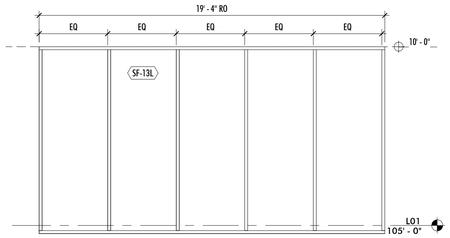

9 STOREFRONT NORTHWEST
1/4" = 1'-0"

SAFETY GLAZING

1. ALL GLAZING ON LEVELS 1 AND 2 SHALL BE SAFETY GLAZING (TEMPERED OR LAMINATED)
2. ON LEVEL 3, THE FOLLOWING SHALL BE SAFETY GLAZING (TEMPERED OR LAMINATED):
   - A. GLAZING IN ALL DOORS
   - B. GLAZING WITHIN 24" OF VERTICAL EDGE OF DOORS AND WITHIN 60" AFF
   - C. GLAZING IN ALL WINDOWS GREATER THAN 9 SF, FROM 18" - 36" AFF ADJACENT TO WALKING SURFACES

     EXCEPTION: OUTBOARD PANES OF INSULATED GLAZING UNITS THAT ARE 25' OR MORE ABOVE ADJACENT GRADE

EXTERIOR STOREFRONT & RIBBON WINDOW

MARK	LENGTH	HEIGHT	COUNT	TYPE	U-FACTOR
SF-1.1	5' - 0"	7' - 2"	1	451 UT	U-0.34 fixed, U-0.36 operable
SF-1.2	5' - 0"	10' - 0"	1	451 UT	U-0.34 fixed, U-0.36 operable
SF-2	8' - 9"	9' - 6"	1	451 UT	U-0.34 fixed, U-0.36 operable
SF-3	9' - 8"	9' - 6"	1	451 UT	U-0.34 fixed, U-0.36 operable
SF-4	6' - 2"	9' - 4"	1	451 UT	U-0.34 fixed, U-0.36 operable
SF-5	6' - 6"	9' - 6"	1	451 UT	U-0.34 fixed, U-0.36 operable
SF-6	10' - 10"	9' - 6"	1	451 UT	U-0.34 fixed, U-0.36 operable
SF-7	3' - 3"	15' - 5 1/4"	5	651 UT	U-0.34 fixed, U-0.36 operable
SF-8.1L	3' - 10"	7' - 2"	3	451 UT W/ STC RATED/LAMINATED GLASS	U-0.34 fixed, U-0.36 operable
SF-8L	28' - 8"	10' - 1 1/2"	1	451 UT W/ STC RATED/LAMINATED GLASS	U-0.34 fixed, U-0.36 operable
SF-9.1L	3' - 10"	7' - 2"	2	451 UT W/ STC RATED/LAMINATED GLASS	U-0.34 fixed, U-0.36 operable
SF-9.2L	3' - 10"	10' - 0 3/4"	1	451 UT W/ STC RATED/LAMINATED GLASS	U-0.34 fixed, U-0.36 operable
SF-9.2L	3' - 10"	10' - 1 1/2"	2	451 UT W/ STC RATED/LAMINATED GLASS	U-0.34 fixed, U-0.36 operable
SF-10L	31' - 6"	5' - 6"	1	451 UT W/ STC RATED/LAMINATED GLASS	U-0.34 fixed, U-0.36 operable
SF-11LL	6' - 2"	10' - 0"	1	451 UT W/ STC RATED/LAMINATED GLASS	U-0.34 fixed, U-0.36 operable
SF-12LL	3' - 4"	10' - 0"	1	451 UT W/ STC RATED/LAMINATED GLASS	U-0.34 fixed, U-0.36 operable
SF-13L	19' - 4"	10' - 5 1/2"	1	451 UT W/ STC RATED/LAMINATED GLASS	U-0.34 fixed, U-0.36 operable
SF-14LL	10' - 7"	10' - 0"	1	451 UT W/ STC RATED/LAMINATED GLASS	U-0.34 fixed, U-0.36 operable
SF-15LL	10' - 9"	10' - 0"	1	451 UT W/ STC RATED/LAMINATED GLASS	U-0.34 fixed, U-0.36 operable

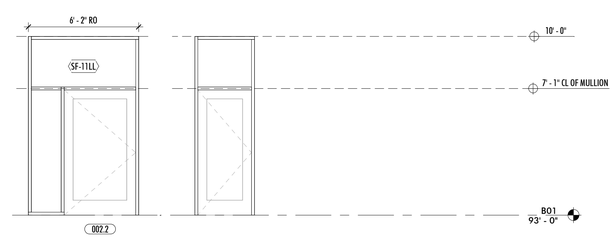

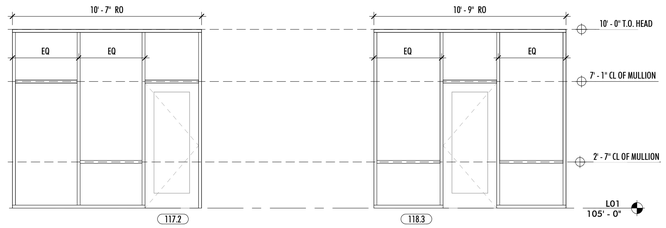

8 STOREFRONT NORTHEAST
1/4" = 1'-0"

7 STOREFRONT NORTH
1/4" = 1'-0"

6 STOREFRONTS WEST
1/4" = 1'-0"

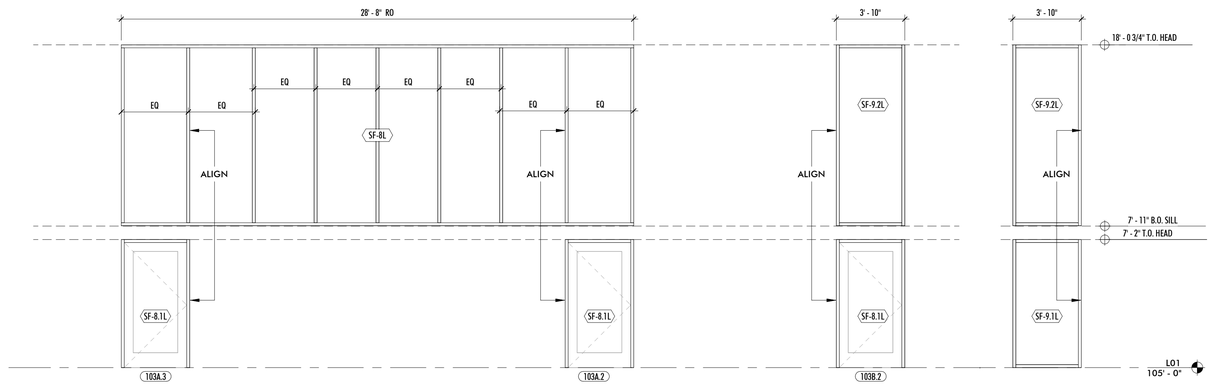

5 STOREFRONT EAST/WEST
1/4" = 1'-0"

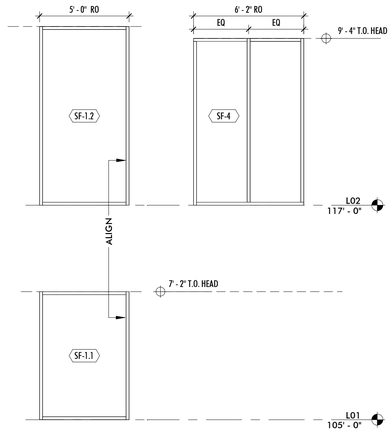

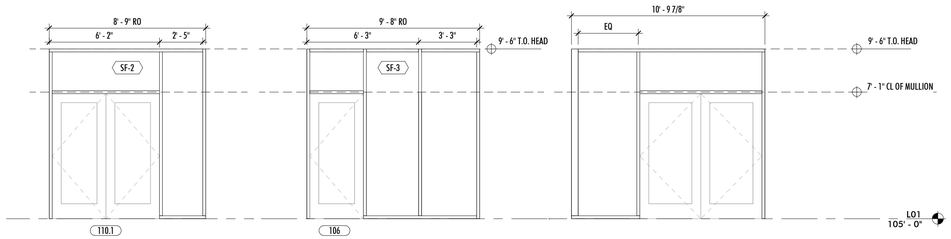

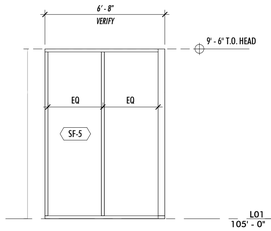

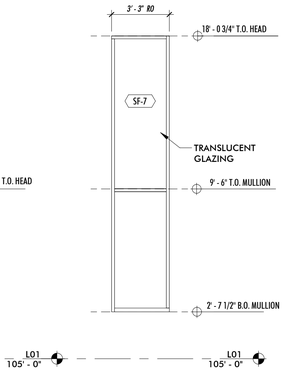

4 SF EAST ENTRY
1/4" = 1'-0"

1 STOREFRONTS SOUTH MP
1/4" = 1'-0"

3 STOREFRONTS SOUTH
1/4" = 1'-0"

2 STOREFRONTS ENTRY
1/4" = 1'-0"

anjali grant design LLC
3427 BEACON AVE S
SEATTLE 98144
ANJALI@AGRANTDESIGN.COM
206-512-4209

3700 E MERCER WAY
BARNABIE POINT PROJECT

NO.	DATE	DESCRIPTION
1	10/22/2025	BLDG PERMIT CORRECTIONS

4 JUNE 2025
BUILDING PERMIT

PROJECT:

EXTERIOR STOREFRONT & CURTAIN WALL

A-603

12/15/2025 11:38:14 AM C:\Users\EatherY.Eather\Documents\BPP_PSB_R24_CD_eatherY.rvt
© ANJALI GRANT DESIGN LLC ORIGINAL SHEET SIZE: 24" X 36"

FINISH LEGEND

ACT	09 51 13 ACOUSTICAL CEILING TILE
BC	09 29 00 BULLNOSE CORNER
CG	CORNER GUARD
CONC-S	03 30 00 SEALED CONCRETE
CPT	09 68 13 CARPET TILE
CT	09 30 00 CERAMIC TILE
EPOXY	09 67 23 EPOXY COATING SYSTEM
FRL	06 83 00 FIBERGLASS REINFORCED LAMINATE
FRP	06 83 00 FIBERGLASS REINFORCED PANEL
GB, GWB	09 29 00 GYPSUM BOARD
HPL	06 41 16 HIGH-PRESSURE LAMINATE (CASEWORK SHALL BE HPL UNLESS NOTED AS WD)
LINO	09 65 43 LINOLEUM
PT	09 90 00 PAINT
RB	09 65 13 RUBBER BASE
RUBBER	09 65 19 RUBBER SHEET FLOORING
SC	SELF-COVE
RAF	09 65 66 RESILIENT ATHLETIC FLOORING
WD	06 41 13 WOOD (CLASS B FLAME SPREAD/SMOKE-DEVELOPED INDEX WHERE INDICATED)
WOM	12 48 13 WALK OFF MAT

RELITE SCHEDULE INTERIOR

TYPE MARK	COUNT	GLAZING WIDTH	GLAZING HEIGHT	SILL HEIGHT	HEAD HEIGHT	GLAZING TYPE	FINISH	DETAILS HEAD/ JAMB/ SILL	COMMENTS
R1.1	2	8' - 9"	3' - 7"	5' - 5"	9' - 0"	3/8" MONOLITHIC OR 1/4" LAMINATED	PTD	B2/A-606	
R1.2	5	7' - 6"	5' - 4"	3' - 8"	9' - 0"	3/8" MONOLITHIC OR 1/4" LAMINATED	PTD	B2/A-606	
R1.3	1	3' - 6"	7' - 2"	0' - 0"	7' - 2"	3/8" MONOLITHIC OR 1/4" LAMINATED	PTD	B2/A-606	
R1.4	1	4' - 11"	6' - 6"	2' - 6"	9' - 0"	3/8" MONOLITHIC OR 1/4" LAMINATED	PTD	B2/A-606	
R2.1	1	7' - 0"	4' - 0"	3' - 2"	7' - 2"	3/8" MONOLITHIC OR 1/4" LAMINATED	PTD	B2/A-606	
R2.2	2	8' - 0"	5' - 10"	3' - 2"	9' - 0"	3/8" MONOLITHIC OR 1/4" LAMINATED	PTD	B2/A-606	
R2.3	1	10' - 0"	3' - 2"	4' - 0"	7' - 2"	3/8" MONOLITHIC OR 1/4" LAMINATED	PTD	B2/A-606	
R2.4	2	6' - 0"	7' - 2"	0' - 0"	7' - 2"	3/8" MONOLITHIC OR 1/4" LAMINATED	PTD	B2/A-606	
R2.5	2	9' - 6"	7' - 8"	2' - 4"	10' - 0"	3/8" MONOLITHIC OR 1/4" LAMINATED	PTD	B2/A-606	
R2.6	1	7' - 6"	6' - 0"	3' - 0"	9' - 0"	3/8" MONOLITHIC OR 1/4" LAMINATED	PTD	B2/A-606	
R3	1	8' - 0"	6' - 2"	2' - 10"	9' - 0"			A2+B2/A-520	TRANSACTION WINDOW

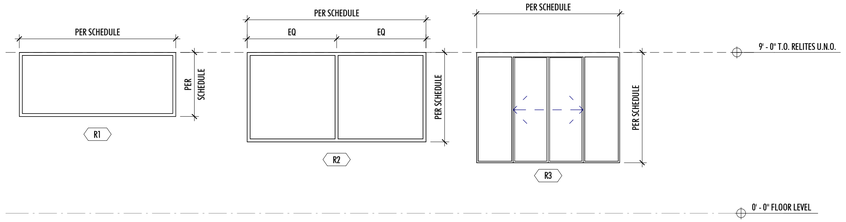

10 INTERIOR RELITE LEGEND
1/4" = 1'-0"

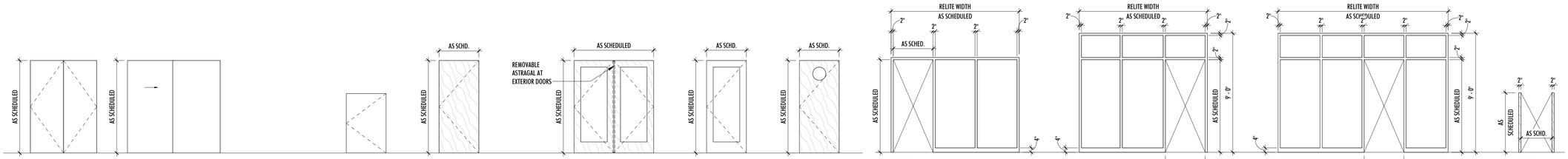

DOOR PANEL TYPES
1/4" = 1'-0"

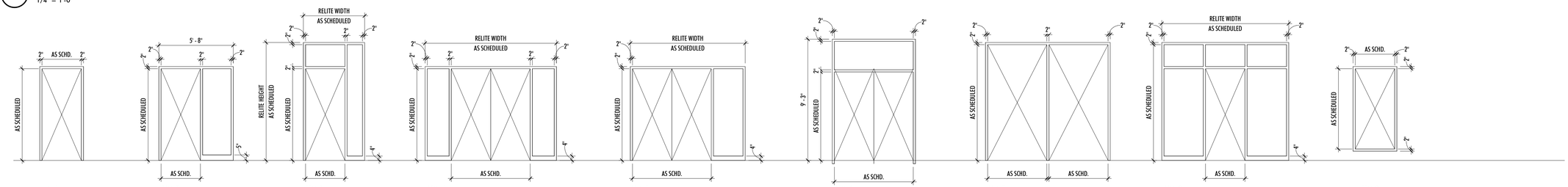

DOOR FRAME TYPES
1/4" = 1'-0"

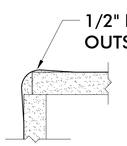

B5 BULLNOSE CORNER
6" = 1'-0"

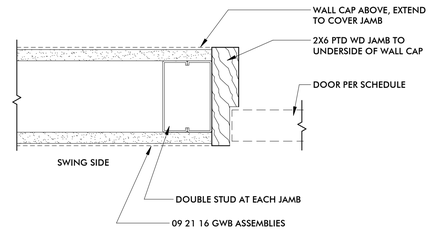

B4 WD HALF DOOR JAMB
3" = 1'-0"

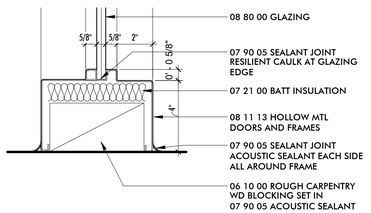

B3 HM RELITE SILL
3" = 1'-0"

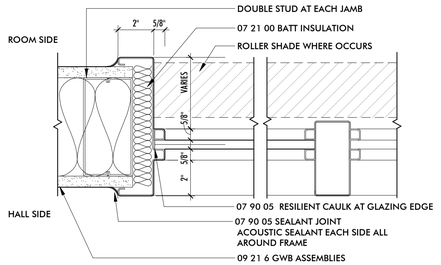

B2 HM RELITE HEAD/JAMB/SILL
3" = 1'-0"

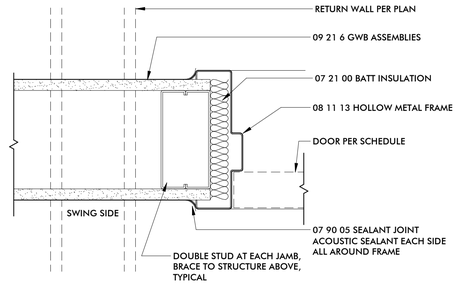

B1 INTERIOR HM DOOR HEAD/JAMB
3" = 1'-0"

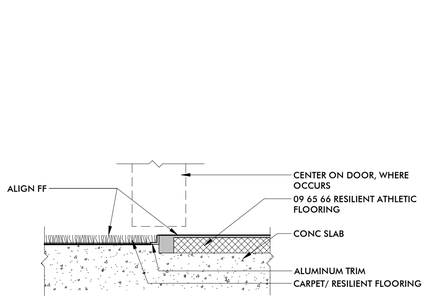

A5 RAF-CPT TRANSITION
6" = 1'-0"

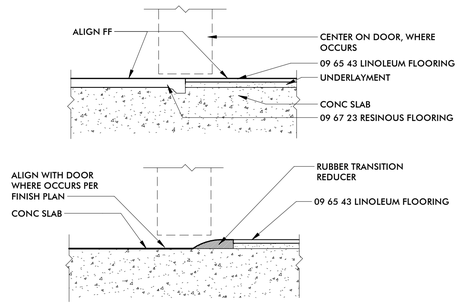

A4 CONC-S-LINO, EPOXY-LINO TRANSITION
6" = 1'-0"

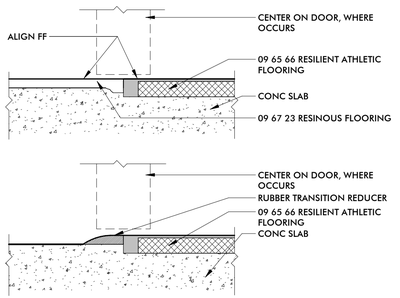

A3 SSF TRANSITIONS
6" = 1'-0"

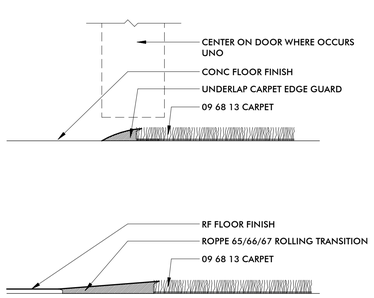

A2 CPT TRANSITIONS
6" = 1'-0"

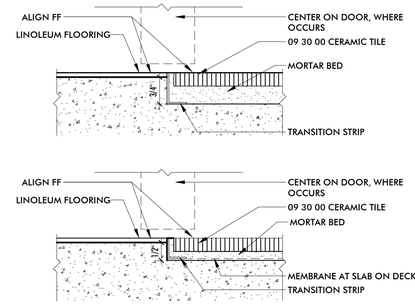

A1 LINO-CT TRANSITION
6" = 1'-0"

anjali grant design LLC
3427 BEACON AVE S
SEATTLE 98144
ANJALI@AGRANTDESIGN.COM
206-512-4209

3700 E MERCER WAY
BARNABIE POINT PROJECT

NO.	DATE	DESCRIPTION
	4 JUNE 2025	BUILDING PERMIT

PROJECT:

RELITE & DOOR TYPES & INTERIOR DTLS

A-606

12/15/2025 11:38:17 AM C:\Users\Evelyn\Documents\BIP_PJ58_R24_CD_evelyn1785SR.rvt
© ANJALI GRANT DESIGN LLC ORIGINAL SHEET SIZE: 24" X 36"

DOOR & FRAME SCHEDULE - INTERIOR

DOOR NO.	LOCATION FROM ROOM NAME	LOCATION FROM ROOM NO.	LOCATION TO ROOM NAME	LOCATION TO ROOM NO.	OPERATION	DOOR PANEL MARK	DOOR PANEL MATL	DOOR PANEL FIN	DOOR PANEL WIDTH	DOOR PANEL HEIGHT	DOOR PANEL THK	DOOR FRAME TYPE	DOOR FRAME MATL	DOOR FRAME FIN	RELITE HEIGHT	RELITE WIDTH	HEAD	JAMB	SILL	UL LABEL	HARDWARE	COMMENTS
B01																						
001A	W/D	001A	CIRC	001	SWING-DBL	D-F	WD	CF	5' - 0"	7' - 0"	1 3/4"	HM-1	HM	PT			B1/A-606	B1/A-606	A4/A-606	N/A	01	
001B	TURN OFF 1	XX-1	TLT	001B	SWING	S-PH	WD	CF	2' - 0"	7' - 0"	1 3/4"	HM-1	HM	PT			B1/A-606	B1/A-606	-	N/A	02	
001C	TURN OFF 1	XX-1	TLT	001C	SWING	S-PH	WD	CF	2' - 0"	7' - 0"	1 3/4"	HM-1	HM	PT			B1/A-606	B1/A-606	-	N/A	02	
001D	TLT	001D	TURN OFF 1	XX-1	SWING	S-PH	WD	CF	3' - 0"	7' - 0"	1 3/4"	HM-1	HM	PT			B1/A-606	B1/A-606	-	N/A	02	
001E	MOP	001E	TURN OFF 1	XX-1	SWING	S-F	WD	CF	2' - 2"	7' - 0"	1 3/4"	HM-1	HM	PT			B1/A-606	B1/A-606	A4/A-606	N/A	03	
002.1	CIRC	001	STEM/ SCIENCE	002	SWING-DBL	D-FG	WD	CF	6' - 0"	7' - 0"	1 3/4"	HM-1	HM	PT			B1/B2/A-606	B1/B2/A-606	-	N/A	05	1, 2
002A	STOR	002A	TURN OFF 4	XX-4	SWING	S-F	WD	CF	3' - 0"	7' - 0"	1 3/4"	HM-1	HM	PT			B1/A-606	B1/A-606	A4/A-606	N/A	07	
002B.1	ELECTRICAL	002B	STOR	002A	SWING	S-F	WD	CF	3' - 0"	7' - 0"	1 3/4"	HM-1	HM	PT			B1/A-606	B1/A-606	-	N/A	08	
003.1	CIRC	001	ART	003	SWING	S-F	WD	CF	3' - 0"	7' - 0"	1 3/4"	HM-2	HM	PT	8' - 0"	5' - 6"	B1/B2/A-606	B1/B2/A-606	-	N/A	10	1, 2
003A	KILN	003A	ART	003	SWING-DBL	D-F	HM	CF	5' - 0"	7' - 0"	1 3/4"	HM-1	HM	PT			B1/A-606	B1/A-606	-	N/A	11	
004	WORKROOM	005	FACULTY	004	SWING	S-F	WD	CF	3' - 0"	7' - 0"	1 3/4"	HM-3	HM	PT	9' - 0"	8' - 0"	B1/B2/A-606	B1/B2/A-606	-	N/A	12	
005	WORKROOM	005	CIRC	001	SWING	S-F	WD	CF	3' - 0"	7' - 0"	1 3/4"	HM-2	HM	PT	8' - 0"	8' - 0"	B1/B2/A-606	B1/B2/A-606	A2/A-606	N/A	12	
006	WORKROOM	005	CONFERENCE	006	SWING	S-F	WD	CF	3' - 0"	7' - 0"	1 3/4"	HM-3	HM	PT	9' - 0"	8' - 0"	B1/B2/A-606	B1/B2/A-606	-	N/A	12	
006A.1	CONFERENCE	006	STORAGE	006A	SWING-DBL	D-F	WD	CF	6' - 0"	7' - 0"	1 3/4"	HM-1	HM	PT			B1/A-606	B1/A-606	A2/A-606	N/A	13	
006A.2	CONFERENCE	006	STORAGE	006A	SWING-DBL	D-F	WD	CF	6' - 0"	7' - 0"	1 3/4"	HM-1	HM	PT			B1/A-606	B1/A-606	A2/A-606	N/A	13	
007	CIRC	001	MEP/STOR	007	SWING-DBL	D-F	WD	CF	6' - 0"	7' - 0"	1 3/4"	HM-1	HM	PT			B1/A-606	B1/A-606	A4/A-606	N/A	13	
008	CIRC	001	MP STORAGE	008	SWING-DBL	D-F	WD	CF	6' - 0"	7' - 0"	1 3/4"	HM-1	HM	PT			B1/A-606	B1/A-606	A4/A-606	N/A	13	
008A	MDF	008A	MP STORAGE	008	SWING	S-F	WD	CF	3' - 0"	7' - 0"	1 3/4"	HM-1	HM	PT			B1/A-606	B1/A-606	-	90 MIN	30 (AC)	
008B	MP STORAGE	008	SPRINKLER	008B	SWING	S-F	WD	CF	3' - 0"	7' - 0"	1 3/4"	HM-1	HM	PT			B1/A-606	B1/A-606	-	N/A	14	
009	TLT	009	CIRC	001	SWING	S-F	WD	CF	3' - 0"	7' - 0"	1 3/4"	HM-1	HM	PT			B1/A-606	B1/A-606	A1/A-606	N/A	15	
SW-0	CIRC	001	WEST STAIR	SW-0	SWING	S-F	PT	HM	4' - 6"	8' - 4"	1 3/4"	HM-1	HM	PT			B1/A-606	B1/A-606	A4/A-606	90 MIN	17(PH, AC, HO, EU)	
L01																						
100.2	MP LOBBY	101	VESTIBULE	100	SWING-DBL	D-FG	WD	CF	6' - 10"	7' - 0"	1 3/4"	HM-6	HM	PT	9' - 6"		B1/B2/A-606	B1/B2/A-606	A2/A-606	N/A	19	1, 2
101A	MOP	101A	MP LOBBY	101	SWING-DBL	D-F	WD	CF	5' - 0"	7' - 0"	1 3/4"	HM-1	HM	PT			B1/A-606	B1/A-606	A4/A-606	N/A	13	
102.1	GYM/MULTI	103B	KITCHEN	102	SWING	S-F	WD/HPL	CF/FF	3' - 0"	7' - 0"	1 3/4"	HM-1	HM	PT			B1/A-606	B1/A-606	A3/A-606	N/A	12	
102.2	KITCHEN	102	MP LOBBY	101	SWING	S-F	WD/HPL	CF/FF	3' - 0"	7' - 0"	1 3/4"	HM-1	HM	PT			B1/A-606	B1/A-606	A4/A-606	N/A	12	
103A.1	MP LOBBY	101	CHAPEL	103A	SWING-DBL	D-FG	WD	CF	6' - 0"	7' - 0"	1 3/4"	HM-6	HM	PT	9' - 6"	6' - 4"	B1/B2/A-606	B1/B2/A-606	A2/A-606	N/A	20 (PH, AC, NR)	
103B.1	GYM/MULTI	103B	MP LOBBY	101	SWING-DBL	D-FG	WD	CF	6' - 0"	7' - 0"	1 3/4"	HM-1	HM	PT			B1/B2/A-606	B1/B2/A-606	A3/A-606	N/A	20 (PH, AC, NR)	
103C	STORAGE	103C	CHAPEL	103A	SWING-DBL	D-F	WD	CF	5' - 6"	7' - 0"	1 3/4"	HM-1	HM	PT			B1/A-606	B1/A-606	-	N/A	11	
103D	STOR	103D	GYM/MULTI	103B	SWING-DBL	D-F	WD/HPL	WB	6' - 0"	7' - 0"	1 3/4"	HM-1	HM	PT			B1/A-606	B1/A-606	A3/A-606	N/A	11	
103E.1	GYM/MULTI	103B	STORAGE	103E	SWING-DBL	D-F	WD/HPL	WB	6' - 0"	7' - 0"	1 3/4"	HM-1	HM	PT			B1/A-606	B1/A-606	A3/A-606	N/A	13	
103E.2	STORAGE	103E	GYM/MULTI	103B	SWING-DBL	D-F	WD/HPL	WB	6' - 0"	7' - 0"	1 3/4"	HM-1	HM	PT			B1/A-606	B1/A-606	A3/A-606	N/A	13	
103E.3	STORAGE	103E	GYM/MULTI	103B	SWING-DBL	D-F	WD/HPL	WB	6' - 0"	7' - 0"	1 3/4"	HM-1	HM	PT			B1/A-606	B1/A-606	A3/A-606	N/A	13	
104	WOMEN'S TLTS	104	MP LOBBY	101	SWING	S-F	WD/HPL	CF/FF	3' - 0"	7' - 0"	1 3/4"	HM-1	HM	PT			B1/A-606	B1/A-606	A1/A-606	N/A	22	
105	MP LOBBY	101	MEN'S TLTS	105	SWING	S-F	WD/HPL	CF/FF	3' - 0"	7' - 0"	1 3/4"	HM-1	HM	PT			B1/A-606	B1/A-606	A1/A-606	N/A	22	
107	VEST	110	OFFICE	107	SWING	S-FG	WD	CF	3' - 0"	7' - 0"	1 3/4"	HM-1	HM	PT			B1/B2/A-606	B1/B2/A-606	-	N/A	23	
110.2	CIRC	111	VEST	110	SWING-DBL	D-FG	WD	CF	6' - 0"	7' - 0"	1 3/4"	HM-5	HM	PT	7' - 2"	8' - 9"	B1/B2/A-606	B1/B2/A-606	A2/A-606	N/A	19 (PH, AC, NR)	
111.1A/B	MP LOBBY	101	CIRC	111	SWING (2)	S-F	PT	HM	4' - 6"	8' - 10"	1 3/4"	HM-7	HM	PT	9' - 6"	9' - 6"	B1/A-606	B1/A-606	-	N/A	42, 04 (PH EAST, HO, AC, NR WEST)	
111.2	CIRC	111	CIRC	111					10' - 3 5/8"	9' - 0"							-	-	-	N/A	32	
111A	TURN OFF 2	XX-2	TLT	111A	SWING	S-PH	WD	CF	2' - 0"	7' - 0"	1 3/4"	HM-1	HM	PT			B1/A-606	B1/A-606	-	N/A	02	
111B	TURN OFF 2	XX-2	TLTS	111B	SWING	S-PH	WD	CF	2' - 0"	7' - 0"	1 3/4"	HM-1	HM	PT			B1/A-606	B1/A-606	-	N/A	02	
111C	TLT	111C	TURN OFF 2	XX-2	SWING	S-PH	WD	CF	3' - 0"	7' - 0"	1 3/4"	HM-1	HM	PT			B1/A-606	B1/A-606	-	N/A	02	
111D			CIRC	111	SWING	S-F	WD	CF	3' - 6"	7' - 0"	1 3/4"	HM-1	HM	PT			B1/A-606	B1/A-606	A4/A-606	N/A	14	
112	OFF	112	CIRC	111	SWING	S-F	WD	CF	3' - 0"	7' - 0"	1 3/4"	HM-2	HM	PT	8' - 0"	4' - 8"	B1/B2/A-606	B1/B2/A-606	A2/A-606	N/A	23	
113.1	CLASSROOM	113	MP LOBBY	101	SWING	S-F	WD	CF	3' - 0"	7' - 0"	1 3/4"	HM-1	HM	PT			B1/B2/A-606	B1/B2/A-606	-	N/A	10	1, 2
113.2	CIRC	111	CLASSROOM	113	SWING	S-F	WD	CF	3' - 0"	7' - 0"	1 3/4"	HM-3	HM	PT	9' - 0"	4' - 8"	B1/B2/A-606	B1/B2/A-606	-	N/A	33	1, 2
114	ADMIN	114	CIRC	111	SWING	S-F	WD	CF	3' - 0"	7' - 0"	1 3/4"	HM-3	HM	PT	9' - 0"	6' - 2"	B1/B2/A-606	B1/B2/A-606	A2/A-606	N/A	10	1, 2
114A	OFF	114A	ADMIN	114	SWING	S-F	WD	CF	3' - 0"	7' - 0"	1 3/4"	HM-2	HM	PT	8' - 0"	5' - 6"	B1/B2/A-606	B1/B2/A-606	-	N/A	25A	1, 2
114B	OFF	114B	ADMIN	114	SWING	S-F	WD	CF	3' - 0"	7' - 0"	1 3/4"	HM-2	HM	PT	8' - 0"	5' - 6"	B1/B2/A-606	B1/B2/A-606	-	N/A	25A	1, 2
114C	OFF	114C	ADMIN	114	SWING	S-F	WD	CF	3' - 0"	7' - 0"	1 3/4"	HM-2	HM	PT	8' - 0"	5' - 6"	B1/B2/A-606	B1/B2/A-606	-	N/A	25A	1, 2
114D	OFF	114D	ADMIN	114	SWING	S-F	WD	CF	3' - 0"	7' - 0"	1 3/4"	HM-3	HM	PT	9' - 0"	5' - 6"	B1/B2/A-606	B1/B2/A-606	-	N/A	25A	1, 2
115	CLASSROOM	115	CIRC	111	SWING	S-F	WD	CF	3' - 0"	7' - 0"	1 3/4"	HM-3	HM	PT	9' - 0"	4' - 8"	B1/B2/A-606	B1/B2/A-606	-	N/A	26 (PH)	1, 2
116	CLASSROOM	116	CIRC	111	SWING	S-F	WD	CF	3' - 0"	7' - 0"	1 3/4"	HM-3	HM	PT	9' - 0"	4' - 8"	B1/B2/A-606	B1/B2/A-606	-	N/A	26 (PH)	1, 2
117.1	PRESCHOOL	117	CIRC	111	SWING	S-F	WD	CF	3' - 0"	7' - 0"	1 3/4"	HM-2	HM	PT	8' - 0"	6' - 6"	B1/B2/A-606	B1/B2/A-606	-	N/A	34	1, 2
117A	PRESCHOOL	117	TLT	117A	SWING	S-H	WD/HPL	CF	2' - 4"	4' - 6"	1 3/4"	WD-1	WD	CF			-	B4/A-606	A1/A-606	N/A	36	
117B	TLT	117B	PRESCHOOL	117	SWING	S-H	WD/HPL	CF	3' - 0"	4' - 6"	1 3/4"	WD-1	WD	CF			-	B4/A-606	A1/A-606	N/A	36	
118.1	CIRC	111	PRESCHOOL	118	SWING	S-F	WD	CF	3' - 0"	7' - 0"	1 3/4"	HM-2	HM	PT	8' - 0"	4' - 8"	B1/B2/A-606	B1/B2/A-606	-	N/A	34	1, 2
118.2	PRESCHOOL	118	PRESCHOOL	117	SWING	S-F	WD	CF	3' - 0"	7' - 0"	1 3/4"	HM-1	HM	PT			B1/B2/A-606	B1/B2/A-606	-	N/A	34	1, 2
118A	PRESCHOOL	118	TLT	118A	SWING	S-H	WD/HPL	CF	2' - 4"	4' - 6"	1 3/4"	WD-1	WD	CF			-	B4/A-606	A1/A-606	N/A	36	
118B	TLT	118B	PRESCHOOL	118	SWING	S-H	WD/HPL	CF	3' - 0"	4' - 6"	1 3/4"	WD-1	WD	CF			-	B4/A-606	A1/A-606	N/A	36	
119	LRC-1	119	CIRC	111	SWING	S-F	WD	CF	3' - 0"	7' - 0"	1 3/4"	HM-2	HM	PT	8' - 0"	6' - 6"	B1/B2/A-606	B1/B2/A-606	-	N/A	27	1, 2
SE-1.2	CIRC	111	EAST STAIR	SE-1	SWING	S-F	PT	HM	3' - 4"	7' - 0"	1 3/4"	HM-1	HM	PT			B1/A-606	B1/A-606	A4/A-606	60 MIN	17 (AC, HO)	
SE-1.3	EAST STAIR	SE-1	VEST	106	SWING	S-F	PT	HM	3' - 4"	7' - 0"	1 3/4"	HM-1	HM	PT			B1/A-606	B1/A-606	A4/A-606	60 MIN	31 (AC)	
SW-1.1	WEST STAIR	SW-1	CIRC	111	SWING	S-F	PT	HM	4' - 6"	8' - 10"	1 3/4"	HM-1	HM	PT			B1/A-606	B1/A-606	A4/A-606	90 MIN	17 (PH, AC, HO, EU)	
L02																						
200B	TURN OFF 3	XX-3	TLT	200B	SWING	S-PH	WD	CF	2' - 0"	7' - 0"	1 3/4"	HM-1	HM	PT			B1/A-606	B1/A-606	-	N/A	02	
200C	TURN OFF 3	XX-3	TLT	200C	SWING	S-PH	WD	CF	2' - 0"	7' - 0"	1 3/4"	HM-1	HM	PT			B1/A-606	B1/A-606	-	N/A	02 (NC)	

DOOR & FRAME SCHEDULE - INTERIOR

DOOR NO.	LOCATION FROM ROOM NAME	LOCATION FROM ROOM NO.	LOCATION TO ROOM NAME	LOCATION TO ROOM NO.	OPERATION	DOOR PANEL MARK	DOOR PANEL MATL	DOOR PANEL FIN	DOOR PANEL WIDTH	DOOR PANEL HEIGHT	DOOR PANEL THK	DOOR FRAME TYPE	DOOR FRAME MATL	DOOR FRAME FIN	RELITE HEIGHT	RELITE WIDTH	HEAD	JAMB	SILL	UL LABEL	HARDWARE	COMMENTS
200D	TURN OFF 3	XX-3	TLT	200D	SWING	S-PH	WD	CF	2' - 0"	7' - 0"	1 3/4"	HM-1	HM	PT			B1/A-606	B1/A-606	-	N/A	02	
200E	TLT	200E	TURN OFF 3	XX-3	SWING	S-PH	WD	CF	3' - 0"	7' - 0"	1 3/4"	HM-1	HM	PT			B1/A-606	B1/A-606	-	N/A	02 (NC)	
200F.1	TURN OFF 3	XX-3	IDF	200F	SWING	S-F	WD	CF	2' - 10"	7' - 0"	1 3/4"	HM-1	HM	PT			B1/A-606	B1/A-606	A4/A-606	N/A	03	
200F.2	BREAK ROOM	211A	IDF	200F	SWING	S-F	WD	CF	2' - 10"	7' - 0"	1 3/4"	HM-1	HM	PT			B1/A-606	B1/A-606	A4/A-606	N/A	03	
200G	TURN OFF 3	XX-3	MOP	200G	SWING	S-F	WD	CF	2' - 6"	7' - 0"	1 3/4"	HM-1	HM	PT			B1/A-606	B1/A-606	A4/A-606	N/A	03	
200H			LIBRARY	200A	SWING-DBL	D-F	WD	CF	4' - 0"	5' - 8"	1 3/4"	HM-1	HM	PT			B1/A-606	B1/A-606	B4/A-522	N/A	13	
201	CIRC	200	TLT	201	SWING	S-F	WD	CF	3' - 0"	7' - 0"	1 3/4"	HM-1	HM	PT			B1/A-606	B1/A-606	A1/A-606	N/A	15	
202	CIRC	200	CLASSROOM	202	SWING	S-F	WD	CF	3' - 0"	7' - 0"	1 3/4"	HM-3	HM	PT	9' - 0"	8' - 0"	B1/B2/A-606	B1/B2/A-606	-	N/A	28	1, 2
203	CIRC	200	CLASSROOM	203	SWING	S-F	WD	CF	3' - 0"	7' - 0"	1 3/4"	HM-3	HM	PT	9' - 0"	8' - 0"	B1/B2/A-606	B1/B2/A-606	-	N/A	28	1, 2
204	CLASSROOM	204	CIRC	200	SWING	S-F	WD	CF	3' - 0"	7' - 0"	1 3/4"	HM-3	HM	PT	9' - 0"	8' - 0"	B1/B2/A-606	B1/B2/A-606	-	N/A	28	1, 2
205	LRC-2	205	LIBRARY	200A			WD	CF	3' - 0"	7' - 0"	1 3/4"		HM	PT	8' - 11"	9' - 8"	B1/B2/A-606	B1/B2/A-606	-	N/A	28	1, 2
206	CLASSROOM	206	CIRC	200	SWING	S-F	WD	CF	3' - 0"	7' - 0"	1 3/4"	HM-3	HM	PT	9' - 0"	4' - 8"	B1/B2/A-606	B1/B2/A-606	-	N/A	26 (PH)	1, 2
207	CLASSROOM	207	CIRC	200	SWING	S-F	WD	CF	3' - 0"	7' - 0"	1 3/4"	HM-3	HM	PT	9' - 0"	4' - 8"	B1/B2/A-606	B1/B2/A-606	-	N/A	26 (PH)	1, 2
211A	BREAK ROOM	211A	CIRC	211	SWING	S-FG	WD	CF	3' - 0"	7' - 0"	1 3/4"	HM-1	HM	PT			B1/B2/A-606	B1/B2/A-606	-	N/A	12	
211A/B	CIRC	200	CIRC	211	SWING (2)	S-F	WD	CF	3' - 0"	7' - 0"	1 3/4"	HM-7	HM	PT	9' - 6"	6' - 6"	B1/A-606	B1/A-606	-	N/A	PH EAST, AC	
211B	BREAK ROOM	211A	MOP	211B	SWING	S-F	WD	CF	2' - 4"	7' - 0"	1 3/4"	HM-1	HM	PT			B1/A-606	B1/A-606	A4/A-606	N/A	03	
211C	BREAK ROOM	211A	TLT	211C	SWING	S-F	WD	CF	2' - 6"	7' - 0"	1 3/4"	HM-1	HM	PT			B1/A-606	B1/A-606	A1/A-606	N/A	02	
211D	TLT	211D	BREAK ROOM	211A	SWING	S-F	WD	CF	3' - 0"	7' - 0"	1 3/4"	HM-1	HM	PT			B1/A-606	B1/A-606	A1/A-606	N/A	02	
212	CIRC	211	RENTAL	212	SWING	S-F	WD	CF	3' - 0"	7' - 0"	1 3/4"	HM-3	HM	PT	9' - 0"	4' - 8"	B1/B2/A-606	B1/B2/A-606	A2/A-606	N/A	28	
212A	RENTAL	212	CONF ROOM	212A	SWING	S-F	WD	CF	3' - 0"	7' - 0"	1 3/4"	HM-3	HM	PT	9' - 0"	4' - 8"	B1/B2/A-606	B1/B2/A-606	-	N/A	37	
212B	OFFICE	212B	RENTAL	212	SWING	S-F	WD	CF	3' - 0"	7' - 0"	1 3/4"	HM-3	HM	PT	9' - 0"	4' - 8"	B1/B2/A-606	B1/B2/A-606	-	N/A	37	
213	CIRC	211	RENTAL	213	SWING	S-F	WD	CF	3' - 0"	7' - 0"	1 3/4"	HM-3	HM	PT	9' - 0"	4' - 8"	B1/B2/A-606	B1/B2/A-606	A2/A-606	N/A	28	
213A	RENTAL	213	CONF ROOM	213A	SWING	S-F	WD	CF	3' - 0"	7' - 0"	1 3/4"	HM-3	HM	PT	9' - 0"	4' - 8"	B1/B2/A-606	B1/B2/A-606	-	N/A	38	
213B	RENTAL	213	WORKRM	213B	SWING	S-F	WD	CF	3' - 0"	7' - 0"	1 3/4"	HM-3	HM	PT	9' - 0"	4' - 8"	B1/B2/A-606	B1/B2/A-606	-	N/A	38	
213C	RENTAL	213	OFFICE	213C	SWING	S-F	WD	CF	3' - 0"	7' - 0"	1 3/4"	HM-3	HM	PT	9' - 0"	4' - 8"	B1/B2/A-606	B1/B2/A-606	-	N/A	37	
213D	MECH MEZZ	213D	WORKRM	213B	SWING	S-F	WD	CF	3' - 0"	7' - 0"	1 3/4"	HM-1	HM	PT			B1/A-606	B1/A-606	A2/A-606	N/A	39	
SE-2	CIRC	211	EAST STAIR	SE-2	SWING	S-F	PT	HM	3' - 0"	7' - 0"	1 3/4"	HM-1	HM	PT			B1/A-606	B1/A-606	A4/A-606	60 MIN	31 (PH, AC, EU)	
SW-2.1	WEST STAIR	SW-2	CIRC	200	SWING	S-F	PT	HM	4' - 6"	8' - 10"	1 3/4"	HM-1	HM	PT			B1/A-606	B1/A-606	A4/A-606	90 MIN	17 (PH, AC, HO, EU)	
SW-2.2	CIRC	200	WEST STAIR	SW-2	SWING	S-F	PT	HM	4' - 6"	8' - 10"	1 3/4"	HM-1	HM	PT			B1/A-606	B1/A-606	A4/A-606	90 MIN	17 (PH, AC, HO, EU)	
L03																						
300A	TLT	300A	CIRC	300	SWING	S-F	WD	CF	2' - 6"	7' - 0"	1 3/4"	HM-1	HM	PT			B1/A-606	B1/A-606	A1/A-606	N/A	02	
300B	CIRC	300	TLT	300B	SWING	S-F	WD	CF	3' - 0"	7' - 0"	1 3/4"	HM-1	HM	PT			B1/A-606	B1/A-606	A1/A-606	N/A	02	
300C	CIRC	300	TLT	300C	SWING	S-F	WD	CF	3' - 0"	7' - 0"	1 3/4"	HM-1	HM	PT			B1/A-606	B1/A-606	A1/A-606	N/A	02	
300D	CIRC	300	JC	300D	SWING	S-F	WD	CF	2' - 10"	7' - 0"	1 3/4"	HM-1	HM	PT			B1/A-606	B1/A-606	A4/A-606	N/A	03	
300E	IDF	300E	CIRC	300	SWING	S-F	WD	CF	3' - 0"	7' - 0"	1 3/4"	HM-1	HM	PT			B1/A-606	B1/A-606	A4/A-606	N/A	03	
300F	CIRC	300	RENTAL OFFICE	300F	SWING	S-F	WD	CF	3' - 0"	7' - 0"	1 3/4"	HM-2	HM	PT	8' - 0"	5' - 8"	B1/B2/A-606	B1/B2/A-606	A2/A-606	N/A	25	
300G	TLT	300G	CIRC	300	SWING	S-F	WD	CF	2' - 6"	7' - 0"	1 3/4"	HM-1	HM	PT			B1/A-606	B1/A-606	A1/A-606	N/A	02	
301A	ENTRY/ART/STEM	301D	OFFICE	301A	SWING	S-F	WD	CF	3' - 0"	7' - 0"	1 3/4"	HM-2	HM	PT	8' - 0"	4' - 8"	B1/B2/A-606	B1/B2/A-606	-	N/A	25A	1, 2
301B	OFFICE	301B	ENTRY/ART/STEM	301D	SWING	S-F	WD	CF	3' - 0"	7' - 0"	1 3/4"	HM-2	HM	PT	8' - 0"	5' - 8"	B1/B2/A-606	B1/B2/A-606	-	N/A	25A	1, 2
301C	OFFICE	301C	ENTRY/ART/STEM	301D	SWING	S-F	WD	CF	3' - 0"	7' - 0"	1 3/4"	HM-2	HM	PT	8' - 0"	5' - 8"	B1/B2/A-606	B1/B2/A-606	-	N/A	25A	1, 2
301D	ENTRY/ART/STEM	301D	CIRC	300	SWING-DBL	D-FG	WD	CF	6' - 0"	7' - 0"	1 3/4"	HM-5	HM	PT	7' - 2"	10' - 0"	B1/B2/A-606	B1/B2/A-606	A2/A-606	N/A	10	
301E	SNOEZELEN RM	301E	ENTRY/ART/STEM	301D	SWING	S-F	WD	CF	3' - 0"	7' - 0"	1 3/4"	HM-2	HM	PT	8' - 0"	5' - 8"	B1/B2/A-606	B1/B2/A-606	-	N/A	28	1, 2
301F	ENTRY/ART/STEM	301D	MUSIC	301F	SWING	S-F	WD	CF	3' - 0"	7' - 0"	1 3/4"	HM-2	HM	PT	8' - 0"	8' - 2"	B1/B2/A-606	B1/B2/A-606	-	N/A	38	1, 2
301G	ENTRY/ART/STEM	301D	GAME/TECH	301G	SWING	S-F	WD	CF	3' - 0"	7' - 0"	1 3/4"	HM-2	HM	PT	8' - 0"	8' - 2"	B1/B2/A-606	B1/B2/A-606	-	N/A	38	1, 2
301H	OFFICE	301H	CIRC	300	SWING	S-F	WD	CF	3' - 0"	7' - 0"	1 3/4"	HM-2	HM	PT	8' - 0"	4' - 8"	B1/B2/A-606	B1/B2/A-606	A2/A-606	N/A	10	
302	CIRC	300	RENTAL	302	SWING	S-F	WD	CF	3' - 0"	7' - 0"	1 3/4"	HM-2	HM	PT	8' - 0"	5' - 0"	B1/B2/A-606	B1/B2/A-606	A2/A-606	N/A	10	
302A	RENTAL	302	OFFICE	302A	SWING	S-F	WD	CF	3' - 0"	7' - 0"	1 3/4"	HM-2	HM	PT	8' - 0"	5' - 8"	B1/B2/A-606	B1/B2/A-606	-	N/A	37	
302B	RENTAL	302	OFFICE	302B	SWING	S-F	WD	CF	3' - 0"	7' - 0"	1 3/4"	HM-2	HM	PT	8' - 0"	5' - 8"	B1/B2/A-606	B1/B2/A-606	-	N/A	37	
302C	RENTAL	302	OFFICE	302C	SWING	S-F	WD	CF	3' - 0"	7' - 0"	1 3/4"	HM-2	HM	PT	8' - 0"	5' - 8"	B1/B2/A-606	B1/B2/A-606	-	N/A	37	
302D	RENTAL	302	OFFICE	302D	SWING	S-F	WD	CF	3' - 0"	7' - 0"	1 3/4"	HM-2	HM	PT	8' - 0"	4' - 8"	B1/B2/A-606	B1/B2/A-606	-	N/A	37	
302E	STOR	302E	OFFICE	302D		D-F	WD	CF	4' - 0"	7' - 0"	1 3/4"	HM-1	HM	PT			B1/A-606	B1/A-606	A2/A-606	N/A	13	
302F	STOR	302F	RENTAL	302		D-F	WD	CF	4' - 0"	7' - 0"	1 3/4"	HM-1	HM	PT			B1/A-606	B1/A-606	A2/A-606	N/A	13	
303	CIRC	300	ENTRY	303	SWING	S-F	WD	CF	3' - 0"	7' - 0"	1 3/4"	HM-2	HM	PT	8' - 0"	5' - 8"	B1/B2/A-606	B1/B2/A-606	A2/A-606	N/A	10	
303A	CIRC	300	CONF ROOM	303A	SWING	S-F	WD	CF	3' - 0"	7' - 0"	1 3/4"	HM-2	HM	PT	8' - 0"	5' - 8"	B1/B2/A-606	B1/B2/A-606	A2/A-606	N/A	28	1, 2
303B	OFF/PHONE	303B	ENTRY	303	SWING	S-F	WD	CF	3' - 0"	7' - 0"	1 3/4"	HM-3	HM	PT	9' - 0"	4' - 8"	B1/B2/A-606	B1/B2/A-606	-	N/A	25A	1, 2
303B.1	OFF/PHONE	303B	OFF/PHONE	303B			WD	CF	7' - 0"	7' - 0"	1 3/4"				7' - 1"	7' - 2"	B1/A-606	B1/A-606	-		41	
303C	COO	303C	ENTRY	303	SWING	S-F	WD	CF	3' - 0"	7' - 0"	1 3/4"	HM-3	HM	PT	9' - 0"	4' - 8"	B1/B2/A-606	B1/B2/A-606	-	N/A	25A	1, 2
303D	ENTRY	303	DEV/COMM	303D	SWING	S-F	WD	CF	3' - 0"	7' - 0"	1 3/4"	HM-3	HM	PT	9' - 0"	4' - 8"	B1/B2/A-606	B1/B2/A-606	-	N/A	25A	1, 2
303E	ENTRY	303	PROGRAM OFFICE	303E	SWING	S-F	WD	CF	3' - 0"	7' - 0"	1 3/4"	HM-3	HM	PT	9' - 0"	4' - 8"	B1/B2/A-606	B1/B2/A-606	-	N/A	25A	1, 2
303F	ENTRY	303	EXEC OFFICE	303F	SWING	S-F	WD	CF	3' - 0"	7' - 0"	1 3/4"	HM-2	HM	PT	8' - 0"	4' - 8"	B1/B2/A-606	B1/B2/A-606	-	N/A	25A	1, 2
303F.1			ENTR

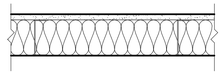

100
FURRING WALL
FIRE:0

5/8" GYPSUM WALLBOARD
METAL STUD FRAMING
ACOUSTICAL BATT INSULATION

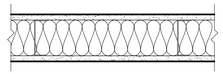

110
FIRE:0
SOUND: STC 40

5/8" GYPSUM WALLBOARD
20 GA METAL STUD FRAMING
ACOUSTICAL BATT INSULATION
5/8" GYPSUM WALLBOARD

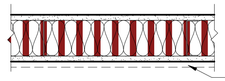

111/211
1-HR RATED
ASSEMBLY, UL# U419
FIRE:1 HOUR
SOUND: STC 40

TYPE X 5/8" GYPSUM WALLBOARD
20 GA METAL STUD FRAMING
ACOUSTICAL BATT INSULATION
TYPE X 5/8" GYPSUM WALLBOARD

ADDITIONAL LAYER OF 5/8" GWB AT WALL TYPE 211

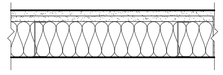

200
ACOUSTICAL
FURRING
FIRE:0
SOUND: STC 55

2 LAYERS 5/8" GYPSUM WALLBOARD
METAL STUD FRAMING
ACOUSTICAL BATT INSULATION
(STC RATING INCLUDES ASSEMBLY UNDERNEATH)

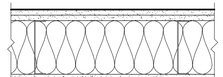

210
FIRE:0
SOUND: STC 45

2 LAYERS 5/8" GYPSUM WALLBOARD
20 GA METAL STUD FRAMING
ACOUSTICAL BATT INSULATION
5/8" GYPSUM WALLBOARD

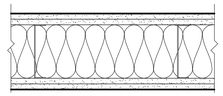

220
FIRE:0
SOUND: STC 50

2 LAYERS 5/8" GYPSUM WALLBOARD
20 GA METAL STUD FRAMING
ACOUSTICAL BATT INSULATION
2 LAYERS 5/8" GYPSUM WALLBOARD

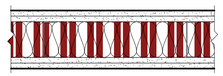

222/221
2-HR RATED
ASSEMBLY
FIRE:2 HOURS
SOUND: STC 50

2 LAYERS TYPE X 5/8" GYPSUM WALLBOARD
20 GA METAL STUD FRAMING
ACOUSTICAL BATT INSULATION
2 LAYERS TYPE X 5/8" GYPSUM WALLBOARD

WALL TYPE 221 IS SIMILAR BUT RATED FOR 1 HR

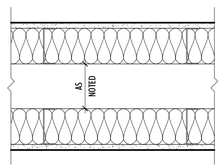

11D
DOUBLE STUD WALL
FIRE:0
SOUND: STC 55

5/8" GYPSUM WALLBOARD
METAL STUD FRAMING
ACOUSTICAL BATT INSULATION
AIR SPACE AS NOTED
METAL STUD FRAMING
ACOUSTICAL BATT INSULATION
5/8" GYPSUM WALLBOARD

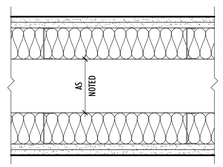

22D
FIRE:0
SOUND: STC 60

2 LAYERS 5/8" GYPSUM WALLBOARD
METAL STUD FRAMING
ACOUSTICAL BATT INSULATION
AIR SPACE AS NOTED
METAL STUD FRAMING
ACOUSTICAL BATT INSULATION
2 LAYERS 5/8" GYPSUM WALLBOARD

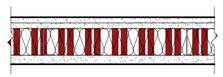

SW1
2-HR-RATED SHAFT
WALL, UL # U415
FIRE:2 HOURS
SOUND: STC 45

2 LAYERS 5/8" TYPE X GYPSUM WALLBOARD
METAL C-H STUD FRAMING
ACOUSTICAL BATT INSULATION
1" TYPE X GYPSUM COREBOARD

3 INTERIOR WALL ASSEMBLIES
1 1/2" = 1'-0"

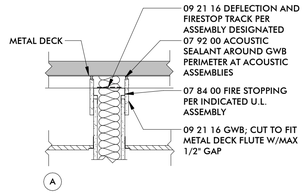

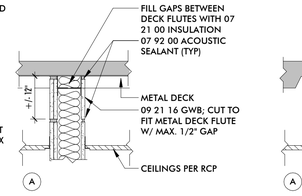

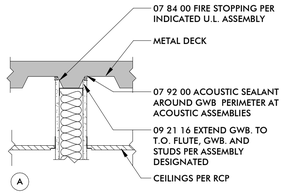

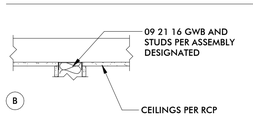

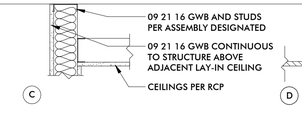

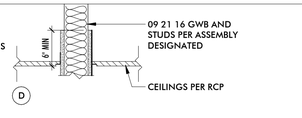

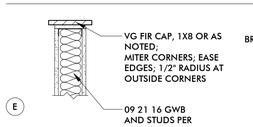

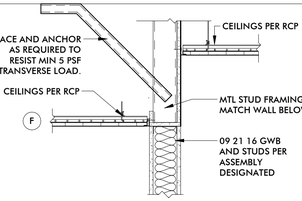

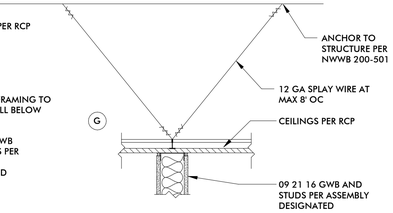

6 PARTITION TOP CONDITIONS
1" = 1'-0"

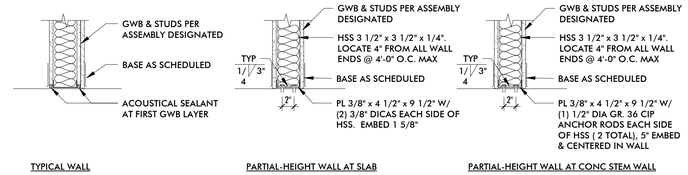

5 WALL BASE CONDITIONS TYP
1" = 1'-0"

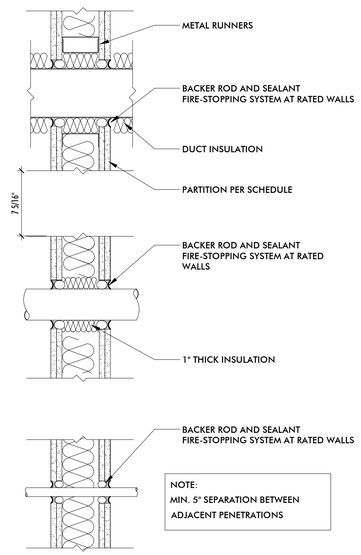

2 WALL PENETRATIONS TYP
1 1/2" = 1'-0"

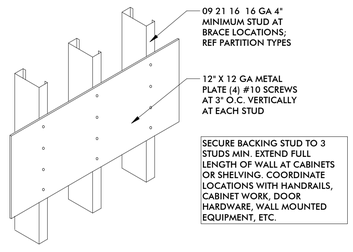

4 BACKING DETAIL
1" = 1'-0"

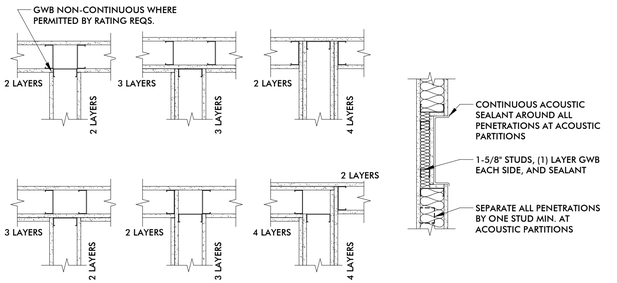

1 PARITION INTERSECTIONS WALL
1" = 1'-0"

WALL TAG LEGEND

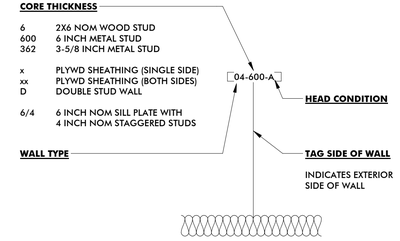

WALL NOTES

1. PARTITION TYPE SYMBOLS ARE NOTED ON THE FLOOR PLANS.
2. STUDS ARE 16" O.C. UNLESS NOTED OTHERWISE.
3. REFERENCE CODE PLAN FOR LOCATION AND EXTENTS OR LIMITS OF RATED PARTITIONS.
4. ALL FIRE-RATED ASSEMBLIES ARE BASED UPON IBC, U.L. AND U.S. GYPSUM ASSOCIATION (GA) TEST DATA. FIRE RATED PARTITIONS ARE TO BE CONSTRUCTED IN ACCORDANCE WITH THE REQUIREMENTS OF THE TESTING AGENCIES. REFER TO SPECIFIC TEST REPORTS INDICATED FOR REQUIRED COMPONENTS AND ASSEMBLY.
5. 1-HOUR WALL RATING CONTINUES THROUGH INTERSECTIONS WITH NON-RATED WALLS, TYPICAL.
6. AT ALL TOILET ROOMS AND SHOWER ROOMS, SUBSTITUTE FACE LAYER GWB WITH (1) LAYER WATER RESISTANT GWB.
7. ALL OTHER PARTITIONS ARE TO BE CONSTRUCTED IN ACCORDANCE WITH THE REQUIREMENTS OF THE SPECIFIC MATERIALS MANUFACTURER AND INDUSTRY STANDARDS.
8. PROVIDE ALL NECESSARY ANCHORAGE BLOCKING, BACKING AND FRAMING FOR WALL MOUNTED CABINETS, SHELVING, MIRRORS, EQUIPMENT, DOORSTOPS, HOLD-OPENS, TOILET ROOM PARTITIONS & ACCESSORIES AND OTHER LOCATIONS AS REQUIRED BY MANUFACTURER SPECIFICATIONS OR INDUSTRY STANDARDS.
9. PROVIDE BRACING AT ALL LOCATIONS PER US GYPSUM GUIDELINES FOR PARTITION FRAMING.
10. ACOUSTIC PARTITIONS ARE TO BE CONSTRUCTED IN ACCORDANCE WITH THE REQUIREMENTS OF TESTING AGENCIES, REFER TO SPECIFIC TEST REPORTS FOR REQUIRED COMPONENTS AND ASSEMBLY. PROVIDE ACOUSTIC SEALANT AROUND WALL PERIMETER & OPENINGS AT BASE GWB LAYER. SEAL ALL PENETRATIONS & OFFSET BY (1) STUD MINIMUM. INSTALL STUD RUNNER WITH ACOUSTIC FOAM TAPE WHERE DESIGNATED BY ASSEMBLY.
11. COMPLETELY SEAL AROUND PENETRATIONS THROUGH ACOUSTICAL WALLS. FILL DEPTH OF GAPS AROUND CUT-OUTS FOR ELECTRICAL BOXES, PIPES AND PLUMBING, AND OTHER PENETRATIONS. PROVIDE INSULATION BETWEEN THE CONCEALED FACE OF FINISH MATERIALS (WITHIN THE STUD OR JOIST CAVITY) AND PIPES, PLUMBING, THE BACK OF BOXES, OR OTHER RECESSED FIXTURES.
12. INSTALL ACOUSTIC INSULATION BLANKET, UNO.
13. AT FURRING ASSEMBLIES PROVIDE NAILING AS PER GA. NO. ASSOCIATED TO THAT ASSEMBLY.
14. MAINTAIN FIRE RESISTANCE RATING FOR ALL CONSTRUCTION INDICATED AT THROUGH-WALL PENETRATIONS, BUILT-IN WALL FIXTURES, ACCESSORIES, AND BEHIND MAILBOXES, FIRE EXTINGUISHER CABINETS, PLUMBING FIXTURES, ELECTRIC PANELS AND SIMILAR ITEMS, IN COMPLIANCE WITH REQUIREMENTS OF APPLICABLE CODES. COORDINATE CONSTRUCTION OF FIRE-RATED ASSEMBLIES WITH DESIGNATED DESIGN NUMBER.
15. WHERE LARGER STUDS OR FURRING ARE REQUIRED TO COVER DUCTS, PIPING, CONDUIT, ETC, THE LARGER STUD SIZE OR FURRING SHALL BE PROVIDED AND SHALL EXTEND THE FULL SURFACE OF THE WALL LENGTH AND HEIGHT WHERE THE FURRING OCCURS.
16. FRAME AND FINISH OPENINGS FOR MECHANICAL AND ELECTRICAL SYSTEMS AS REQUIRED BY MECHANICAL/ELECTRICAL DOCUMENTS.
17. COORDINATE WITH STRUCTURAL DRAWINGS FOR REQUIRED SHEARWALL SHEATHING. PROVIDE IN ADDITION TO COMPONENTS INDICATED ON WALL TYPE DETAILS AS REQUIRED.
18. PROVIDE LABELS AT RATED WALLS PER THE DIAGRAM BELOW.
19. REFERENCE PROJECT SPECIFICATIONS:
    01 73 23 BRACING AND ANCHORING
    06 10 00 ROUGH CARPENTRY FOR BLOCKING REQUIREMENTS
    07 21 00 BATT INSULATION
    07 84 00 FIRE STOPPING
    07 90 05 JOINT AND ACOUSTIC SEALANTS
    09 21 16 GYPSUM BOARD ASSEMBLIES

3427 BEACON AVE S
SEATTLE 98144
ANJALI@AGRANTDESIGN.COM
206-512-4209

anjali grant design LLC

3700 E MERCER WAY
BARNABIE POINT PROJECT

NO.	DATE	DESCRIPTION
	4 JUNE 2025	BUILDING PERMIT

PROJECT:

INTERIOR WALL ASSEMBLIES

A-701

12/15/2025 1:31:53 PM C:\Users\EatherY\Desktop\BPP_PSB_R24_CD_eatherY150R.rvt
© ANJALI GRANT DESIGN LLC ORIGINAL SHEET SIZE: 24" X 36"

3427 BEACON AVE S
SEATTLE 98144
ANJALI@AGRANTDESIGN.COM
206-512-4209

anjali grant design LLC

GWB-1
GYPSUM WALLBOARD

CEILING SUSPENSION SYSTEM; BRACING PER SEISMIC CEILING DIAGRAM
5/8" GYPSUM WALLBOARD

CONTRACTOR'S OPTION TO USE LIGHT-GAUGE METAL FRAMING
FIRE RATING:0

GWB-2
ACOUSTICAL BARRIER CEILING

NO PENETRATIONS THROUGH GWB-2 PERMITTED; COORD WEIGHT RATING OF SPRINGS TO INCLUDE ALL SUSPENDED ASSEMBLIES, EQUIPMENT, FIXTURES AND DUCTWORK; FILL CAVITY WITH BATT IF REQUIRED FOR FIRE PROTECTION, LEAVING ADEQUATE SPACE AROUND HANGERS FOR SPRINGS TO MOVE FREELY

ACOUSTICAL BATT INSULATION
MASON 30N SPRING CEILING HANGERS
STEEL CEILING GRID FRAMING
2 LAYERS 5/8" GYPSUM WALLBOARD
FIRE RATING:0

GWB-3
GYPSUM WALLBOARD

CEILING SUSPENSION SYSTEm; BRACING PER SEISMIC CEILING DIAGRAM
5/8" GYPSUM WALLBOARD
5/8" GYPSUM WALLBOARD

CONTRACTOR'S OPTION TO USE LIGHT-GAGE METAL FRAMING
FIRE RATING:0

ACT-1
ACOUSTICAL TILE

SUSPENDED 2X4 ACOUSTIC CEILING TILE
BRACING PER SEISMIC CEILING BRACING DIAGRAM
FIRE RATING:0

ACT-2
MOISTURE-RESISTANT ACOUSTICAL TILE

SUSPENDED 2X4 MOISTURE-RESISTANT ACOUSTIC CEILING TILE
BRACING PER SEISMIC CEILING BRACING DIAGRAM
FIRE RATING:0

ACP-1
SUSPENDED WOOD SLAT CEILING

ACOUSTICAL BATT INSULATION
CEILING SUSPENSION SYSTEM, BRACING PER SEISMIC ZONE
CROSS PIECE BACKER
09 54 26 LINEAR WOOD CEILING
FIRE RATING:0

09 54 26 3/4" X 1-3/8" WOOD SLAT AT 2" OC

GENERAL NOTE:
CEILING ASSEMBLIES GREATER THAN 5 PSF SHOULD BE SUPPORTED BY ¼" MINIMUM SCREW ANCHORS IN LIEU OF RAMSET/POWDER-ACTUATED FASTENERS.

4 CEILING ASSEMBLIES
1 1/2" = 1'-0"

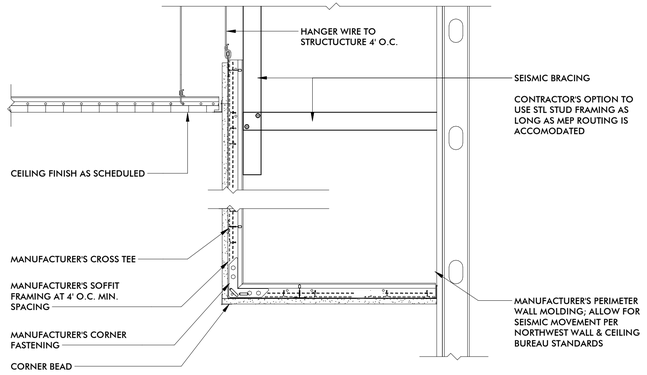

5 DRYWALL SOFFITS WITH ACT ABOVE
1 1/2" = 1'-0"

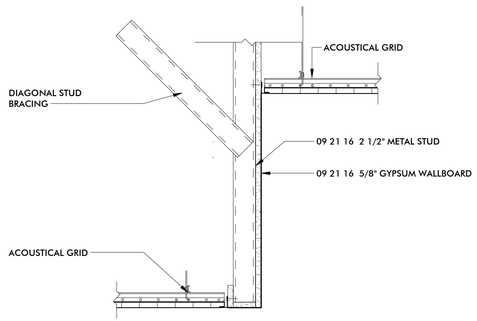

3 ACT CHANGE IN LEVEL
1 1/2" = 1'-0"

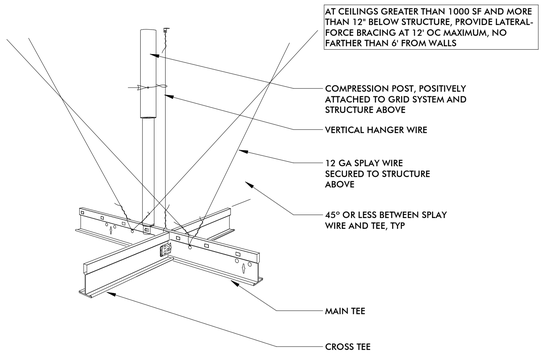

2 LATERAL FORCE BRACING DETAIL
1 1/2" = 1'-0"

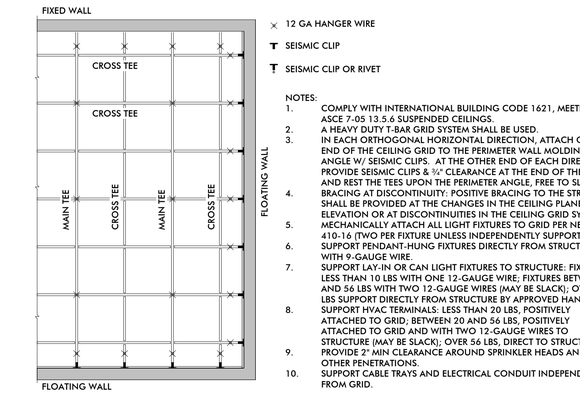

NOTES:
1. COMPLY WITH INTERNATIONAL BUILDING CODE 1621, MEETING ASCE 7-05 13.5.6 SUSPENDED CEILINGS.
2. A HEAVY DUTY T-BAR GRID SYSTEM SHALL BE USED.
3. IN EACH ORTHOGONAL HORIZONTAL DIRECTION, ATTACH ONE END OF THE CEILING GRID TO THE PERIMETER WALL MOLDING ANGLE W/ SEISMIC CLIPS. AT THE OTHER END OF EACH DIRECTION, PROVIDE SEISMIC CLIPS & ¾" CLEARANCE AT THE END OF THE TEES AND REST THE TEES UPON THE PERIMETER ANGLE, FREE TO SLIDE.
4. BRACING AT DISCONTINUITY: POSITIVE BRACING TO THE STRUCTURE SHALL BE PROVIDED AT THE CHANGES IN THE CEILING PLANE ELEVATION OR AT DISCONTINUITIES IN THE CEILING GRID SYSTEM.
5. MECHANICALLY ATTACH ALL LIGHT FIXTURES TO GRID PER NEC 410-16 (TWO PER FIXTURE UNLESS INDEPENDENTLY SUPPORTED).
6. SUPPORT PENDANT-HUNG FIXTURES DIRECTLY FROM STRUCTURE WITH 9-GAUGE WIRE.
7. SUPPORT LAY-IN OR CAN LIGHT FIXTURES TO STRUCTURE: FIXTURES LESS THAN 10 LBS WITH ONE 12-GAUGE WIRE; FIXTURES BETWEEN 10 AND 56 LBS WITH TWO 12-GAUGE WIRES (MAY BE SLACK); OVER 56 LBS SUPPORT DIRECTLY FROM STRUCTURE BY APPROVED HANGERS
8. SUPPORT HVAC TERMINALS: LESS THAN 20 LBS, POSITIVELY ATTACHED TO GRID; BETWEEN 20 AND 56 LBS, POSITIVELY ATTACHED TO GRID AND WITH TWO 12-GAUGE WIRES TO STRUCTURE (MAY BE SLACK); OVER 56 LBS, DIRECT TO STRUCTURE.
9. PROVIDE 2" MIN CLEARANCE AROUND SPRINKLER HEADS AND OTHER PENETRATIONS.
10. SUPPORT CABLE TRAYS AND ELECTRICAL CONDUIT INDEPENDENTLY FROM GRID.

1 SEISMIC CEILING GRID PLAN
3/4" = 1'-0"

NO.	DATE	DESCRIPTION
	4 JUNE 2025	BUILDING PERMIT

PROJECT:

3700 E MERCER WAY
BARNABIE POINT PROJECT

CEILING ASSEMBLIES

A-702

12/15/2025 11:38:21 AM C:\Users\Anjali Yadav\Documents\BP1_PSB_R24_CD_wasiaTB50R.rvt
© ANJALI GRANT DESIGN LLC
ORIGINAL SHEET SIZE: 24" X 36"

Coming October 20th, discover our sleek new design and powerful features. Learn More

Design/System/Construction/Assembly Usage Disclaimer

- Authorities Having Jurisdiction should be consulted in all cases as to the particular requirements covering the installation and use of UL Certified products, equipment, system, devices, and materials.
- Authorities Having Jurisdiction should be consulted before construction.
- Fire resistance assemblies and products are developed by the design submitter and have been investigated by UL for compliance with applicable requirements. The published information cannot always address every construction nuance encountered in the field.
- When field issues arise, it is recommended the first contact for assistance be the technical service staff provided by the product manufacturer noted for the design. Users of fire resistance assemblies are advised to consult the general Guide Information for each product category and each group of assemblies. The Guide Information includes specifics concerning alternate materials and alternate methods of construction.
- Only products which bear UL's Mark are considered Certified.

BXUV - Fire Resistance Ratings - ANSI/UL 263 Certified for United States
BXUV7 - Fire Resistance Ratings - CAN/ULC-S101 Certified for Canada
See General Information for Fire resistance Ratings - ANSI/UL 263 Certified for United States
Design Criteria and Allowable Variances

See General Information for Fire Resistance Ratings - CAN/ULC-S101 Certified for Canada
Design Criteria and Allowable Variances

Design No. U415

July 31, 2025

Nonbearing Wall Ratings — 1, 2, 3 or 4 Hr
*** Indicates such products shall bear the UL or cUL Certification Mark for jurisdictions employing the UL or cUL Certification (such as Canada), respectively.**

System A – 1 Hr.

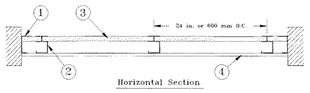

Horizontal Section

4. **Gypsum Board* —**

System A — 1 Hr

Gypsum panels, with beveled, square or tapered edges, nom 5/8 in. thick, 48 in. or 1200 mm wide, applied vertically or horizontally, attached to studs with 1 in. long Type S steel screws spaced 12 in. when installed vertically or 8 in OC when installed horizontally. Horizontal joints need not be backed by steel framing.

CGC INC — Types AR, C, IP-AR, IP-X1, IP-X2, IPC-AR, SCX, SHX, ULIX, ULSX, USGX, WRC, WRX

THE SIAM GYPSUM INDUSTRY (SONGKHLA) CO — Types C and SCX

UNITED STATES GYPSUM CO — Types AR, C, FRX-G, IP-AR, IP-X1, IP-X2, IPC-AR, SCX, SGX, SHX, ULIX, ULX, WRC, WRX, USGX.

USG BORAL DRYWALL SFZ LLC — Types C, SCX, SGX, USGX

USG MEXICO S A DE C V — Types AR, C, IP-AR, IP-X1, IP-X2, IPC-AR, SCX, SHX, ULX, USGX, WRC, WRX

System B — 2 Hr

Gypsum panels, with beveled, square or tapered edges, nom 1/2 in. or 5/8 in. thick, 48 in. or 1200 mm wide, applied vertically or horizontally in two layers. Inner or base layer attached to studs with 1 in. long Type S steel screws spaced 24 in. OC when installed vertically or 16 in. OC when installed horizontally. Outer or face layer attached to studs with 1-5/8 in. long Type S steel screws spaced 12 in. OC when installed vertically and staggered 12 in. from base layer screws or 8 in. OC when installed horizontally and staggered 8 in. from base layer screws. Horizontal joints between inner and outer layers staggered a min of 12 in. Horizontal joints need not be backed by steel framing. Vertical joints centered over studs and staggered 24 in.

CGC INC — 1/2 in. Type C, IP-X2, IPC-AR or WRC; 5/8 in. Types AR, C, IP-AR, IP-X1, IP-X2, IPC-AR, SCX, SHX, ULIX, USGX, WRC, WRX

THE SIAM GYPSUM INDUSTRY (SONGKHLA) CO — Types C and SCX

UNITED STATES GYPSUM CO — 1/2 in. Types C, IP-X2, IPC-AR, or WRC; 5/8 in. Types AR, C, FRX-G, IP-AR, IP-X1, IP-X2, IPC-AR, SCX, SGX, SHX, ULIX, ULX, USGX, WRC, WRX.

USG BORAL DRYWALL SFZ LLC — Type C; 5/8 in. Types C, SCX, SGX, USGX

USG MEXICO S A DE C V — 1/2 in. Types C, IP-X2, IPC-AR; 5/8 in. Types AR, C, IP-AR, IP-X1, IP-X2, IPC-AR, SCX, SHX, ULIX, USGX, WRC, WRX

System C — 2 Hr

Gypsum panels, with beveled, square or tapered edges, nom 3/4 in. thick, 48 in. or 1200 mm wide, applied vertically or horizontally, secured with 1-1/4 in. long Type S steel screws spaced 8 in. OC along vertical edges and 12 in. OC in the field when installed vertically or 8 in. OC along the vertical edges and in the field when installed horizontally. Horizontal joints need not be backed by steel framing. Screws along side joints offset 4 in. Requires min 4 in. deep framing per items 1, 2 and 3. Requires min 3 in. thick mineral wool batts per item 6.

CGC INC — Types IP-X3 or ULTRACODE

UNITED STATES GYPSUM CO — Types IP-X3 or ULTRACODE

USG BORAL DRYWALL SFZ LLC — Type ULTRACODE

USG MEXICO S A DE C V — Types IP-X3 or ULTRACODE

System D — 2 Hr

Gypsum panels, with beveled, square or tapered edges, nom 5/8 in. thick, 48 in. or 1200 mm wide, applied vertically or horizontally, attached directly to studs with 1 in. long Type S steel screws spaced 24 in. when installed vertically or 16 in. OC when installed horizontally. Horizontal joints need not be backed by steel framing. Requires face layer of 1/2 or 5/8 in. thick cementitious backer units per Item 7 and min 1-1/2 in. thick mineral wool batts per Item 6.

CGC INC — Types AR, C, IP-AR, IP-X1, IP-X2, IPC-AR, SCX, SHX, ULIX, USGX, WRC, WRX

THE SIAM GYPSUM INDUSTRY (SONGKHLA) CO — Types C and SCX

UL Product iQ®

UL Solutions

Design/System/Construction/Assembly Usage Disclaimer

- Authorities Having Jurisdiction should be consulted in all cases as to the particular requirements covering the installation and use of UL Certified products, equipment, system, devices, and materials.
- Authorities Having Jurisdiction should be consulted before construction.
- Fire resistance assemblies and products are developed by the design submitter and have been investigated by UL for compliance with applicable requirements. The published information cannot always address every construction nuance encountered in the field.
- When field issues arise, it is recommended the first contact for assistance be the technical service staff provided by the product manufacturer noted for the design. Users of fire resistance assemblies are advised to consult the general Guide Information for each product category and each group of assemblies. The Guide Information includes specifics concerning alternate materials and alternate methods of construction.
- Only products which bear UL's Mark are considered Certified.

BXUV - Fire Resistance Ratings - ANSI/UL 263 Certified for United States
BXUV7 - Fire Resistance Ratings - CAN/ULC-S101 Certified for Canada
See General Information for Fire resistance Ratings - ANSI/UL 263 Certified for United States
Design Criteria and Allowable Variances

See General Information for Fire Resistance Ratings - CAN/ULC-S101 Certified for Canada
Design Criteria and Allowable Variances

Design No. N501

February 22, 2023

Restrained Beam Rating — 2 Hr.
Unrestrained Beam Rating — 2 Hr.
This design was evaluated using a load design method other than the Limit States Design Method (e.g., Working Stress Design Method). For jurisdictions employing the Limit States Design Method, such as Canada, a load restriction factor shall be used — See Guide BXUV or BXUV7

*** Indicates such products shall bear the UL or cUL Certification Mark for jurisdictions employing the UL or cUL Certification (such as Canada), respectively.**

Feedback

12/15/2025 11:38:26 AM C:\Users\EastAyYeaw\Documents\BIM\P_P06_R24_CD_eastAyTE65R.rvt
© ANJALI GRANT DESIGN LLC ORIGINAL SHEET SIZE: 24" X 36"

System B – 2 Hr.

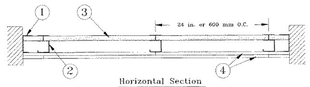

Horizontal Section

System C – 2 Hr.

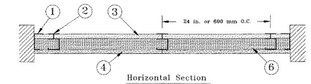

Horizontal Section

System D – 2 Hr.

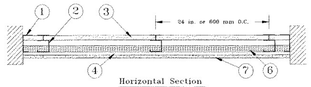

Horizontal Section

System E – 2 Hr.

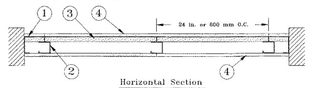

Horizontal Section

UNITED STATES GYPSUM CO — Types AR, C, FRX-G, IP-AR, IP-X1, IP-X2, IPC-AR, SCX, SGX, SHX, ULIX, ULX, USGX, WRC, WRX.

USG BORAL DRYWALL SFZ LLC — Types C, SCX, SGX, USGX

USG MEXICO S A DE C V — Types AR, C, IP-AR, IP-X1, IP-X2, IPC-AR, SCX, SHX, ULIX, USGX, WRC, WRX

System E — 2 Hr

Gypsum panels, with beveled, square or tapered edges, nom 1/2 in. or 5/8 in. thick, 48 in. or 1200 mm wide, applied vertically or horizontally, attached to studs with 1 in. long Type S steel screws spaced 12 in. OC when installed vertically or 8 in. when installed horizontally. Horizontal joints need not be backed by steel framing.

CGC INC — 1/2 in. Types C, IP-X2, IPC-AR; 5/8 in. Types AR, C, IP-AR, IP-X1, IP-X2, IPC-AR, SCX, SHX, ULIX, USGX, WRC, WRX

THE SIAM GYPSUM INDUSTRY (SONGKHLA) CO — Types C and SCX

UNITED STATES GYPSUM CO — 1/2 in. Types C, IP-X2, IPC-AR; 5/8 in. Types AR, C, IP-AR, IP-X1, IP-X2, IPC-AR, SCX, SGX, SHX, ULIX, ULX, USGX, WRC, WRX.

USG BORAL DRYWALL SFZ LLC — 1/2 in. Type C; 5/8 in. Types C, SCX, SGX, USGX

USG MEXICO S A DE C V — 1/2 in. Types C, IP-X2, IPC-AR; 5/8 in. Types AR, C, IP-AR, IP-X1, IP-X2, IPC-AR, SCX, SHX, ULIX, USGX, WRC, WRX

System F — 2 Hr

Gypsum panels, with beveled, square or tapered edges, nom 1/2 in. or 5/8 in. thick, 48 in. or 1200 mm wide, applied vertically in two layers. Inner or base layer attached to resilient furring channels (Item 2B) with 1 in. long Type S steel screws spaced 24 in. Outer or face layer attached to resilient furring channels (Item 2B) with 1-5/8 in. long Type S steel screws spaced 12 in. OC and staggered 12 in. from base layer screws. Joints between inner and outer layers staggered 24 in.

CGC INC — 1/2 in. Type C, IP-X2, IPC-AR or WRC; 5/8 in. Types AR, C, FRX-G, IP-AR, IP-X1, IP-X2, IPC-AR, SCX, SHX, ULIX, USGX, WRC, WRX

THE SIAM GYPSUM INDUSTRY (SONGKHLA) CO — Types C and SCX

UNITED STATES GYPSUM CO — 1/2 in. Type C, IP-X2, IPC-AR or WRC; 5/8 in. Types AR, C, FRX-G, IP-AR, IP-X1, IP-X2, IPC-AR, SCX, SGX, SHX, ULIX, ULX, USGX, WRC, WRX.

USG BORAL DRYWALL SFZ LLC — 1/2 in. Type C; 5/8 in. Types C, SCX

USG MEXICO S A DE C V — 1/2 in. Types C, IP-X2, IPC-AR; 5/8 in. Types AR, C, IP-AR, IP-X1, IP-X2, IPC-AR, SCX, SHX, ULIX, USGX, WRC, WRX

System G — 3 Hr

Gypsum panels, with beveled, square or tapered edges, nom 5/8 in. thick, 48 in. or 1200 mm wide, applied vertically or horizontally in three layers. Inner or base layer attached to studs with 1 in. long Type S steel screws spaced 24 in. OC when installed vertically or 16 in OC when installed horizontally. Middle layer attached to studs with 1-5/8 in. long Type S steel screws spaced 24 in. when installed vertically or 16 in. OC when installed horizontally. Outer or face layer attached to studs with 2-1/4 in. long Type S steel screws spaced 16 in. when installed vertically or 12 in. OC when installed horizontally. Screws offset 6 in. from layer below. Horizontal joints on adjacent layers staggered a min of 12 in. . Horizontal joints need not be backed by steel framing. Vertical joints centered over studs and staggered 24 in. on adjacent layers.

CGC INC — Types C, IP-X2, IPC-AR, ULIX, WRC

THE SIAM GYPSUM INDUSTRY (SONGKHLA) CO — Type C

UNITED STATES GYPSUM CO — Types C, IP-X2, IPC-AR, ULIX, WRC

USG BORAL DRYWALL SFZ LLC — Type C

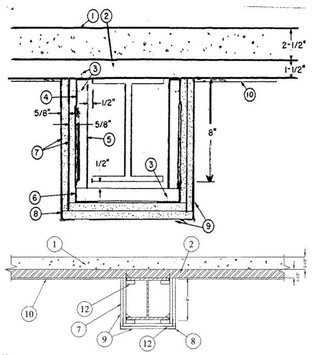

Steel Beam

— Min size, a W8X24 with outside dimensions of 7-7/8x6-1/2 in. with a flange thickness of 3/8 in., a web thickness of 1/4 in., and a cross-sectional area of 7.06 sq in.

1. **Normal Weight Concrete —** 148 pcf.

2. **Steel Floor and Form Units* —** 1-1/2 in. fluted type, welded to beam.

3. **Drill Screw —** No. 8-18 by 1/2 in. long Phillips panhead drill screws, self-drilling and self-tapping, made of case-hardened steel.

4. **Runner Angle —** 24 MSG galv steel with 1 and 2-in. legs, fastened to steel deck 12 in. O.C. with item 3.

Feedback

System F – 2 Hr.

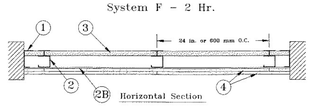

Horizontal Section

System G – 3 Hr.

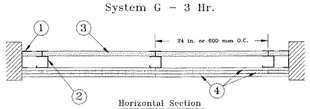

Horizontal Section

System H – 3 Hr.

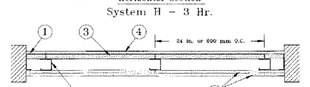

Horizontal Section

System I – 4 Hr.

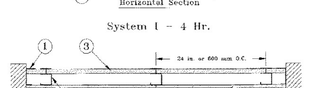

Horizontal Section

1. **Floor, Side and Ceiling Runners —** "J" - shaped runner, min 2-1/2 in. deep (min 4 in. deep when System C is used), with unequal legs of 1 in. and 2 in., fabricated from min 24 MSG (min 20 MSG when Item 4A, 4B, 4C, 4D or 7 are used) galv steel. Runners positioned with short leg toward finished side of wall. Runners attached to structural supports with steel fasteners located not greater than 2 in. from ends and not greater than 24 in. OC. "E" - shaped studs (Item 2A) may be used as side runners in place of "J" - shaped runners. Runners may be supplied with securement tabs for gypsum liner panels (refer to Item 3).

USG MEXICO S A DE C V — Types C, IP-X2, IPC-AR, WRC

System H — 3 Hr

Gypsum panels, with beveled, square or tapered edges, nom 5/8 in. thick, 48 in. or 1200 mm wide, applied vertically or horizontally, two layers over the flange of the "C" section of the studs, one layer over the flange of the "H" section of the studs. Inner or base layer attached to studs with 1 in. long Type S steel screws spaced 24 in. OC when installed vertically or 16 in. OC when installed horizontally. Face layer attached to studs with 1-5/8 in. long Type S steel screws spaced 16 in. when installed vertically or 12 in. OC when installed horizontally. Screws offset 6 in. from layer below. Horizontal joints on adjacent layers staggered a min of 12 in. Horizontal joints need not be backed by steel framing. Vertical joints centered over studs and staggered 24 in. on adjacent layers.

CGC INC — Types C, IP-X2, IPC-AR, ULIX, WRC

THE SIAM GYPSUM INDUSTRY (SONGKHLA) CO — Type C

UNITED STATES GYPSUM CO — Types C, IP-X2, IPC-AR, ULIX, WRC

USG BORAL DRYWALL SFZ LLC — Type C

USG MEXICO S A DE C V — Types C, IP-X2, IPC-AR; 5/8 in. Types AR, C, IP-AR, IP-X1, IP-X2, IPC-AR, SCX, SHX, ULIX, USGX, WRC, WRX

System I — 4 Hr

Gypsum panels, with beveled, square or tapered edges, nom 3/4 in. thick, 4 ft wide (or 1200 mm for metric spacing) wallboard with square or tapered edges. Total of four layers to be used. First and second (inner) layers applied vertically or horizontally over the steel studs. Horizontal joints need not be backed by steel framing. When applied vertically, joints centered over studs and staggered min 24 in., otherwise all joints staggered min 12 in. First layer secured to studs with 1-1/4 in. long Type S self-drilling, self-tapping bugle-head steel screws spaced 24 in. OC. Second layer secured to studs with 2-1/4 in. long Type S self-drilling, self-tapping bugle-head steel screws spaced 12 in. OC. Third layer applied vertically over the forming channels (Item 2C) with a 1-1/4 in. long Type S self-drilling, self-tapping bugle-head steel screws spaced 12 in. OC. Fourth layer applied vertically or horizontally with 2-1/4 in. long Type S self-drilling, self-tapping bugle-head steel screws spaced 12 in. OC. When applied vertically, joints to be staggered min 24 in. from third layer, otherwise all joints staggered min 12 in.

CGC INC — Types IP-X3 or ULTRACODE

UNITED STATES GYPSUM CO — Types IP-X3 or ULTRACODE

USG BORAL DRYWALL SFZ LLC — Type ULTRACODE

USG MEXICO S A DE C V — Types IP-X3 or ULTRACODE

4A. **Gypsum Board* —** (As an alternate to Item 4 Systems A, B, C, D, E, G, H, and I when used as the base layer, For direct attachment only) — Nom 5/8 in. or 3/4 in. thick lead backed gypsum panels with beveled, square or tapered edges, applied vertically. Vertical joints centered over 20 MSG steel studs and staggered min 1 stud cavity on opposite sides of studs. See Items 1, 2, 2A, 2B and 2D. Wallboard secured to studs with 1-1/4 in. long Type S-12 steel screws spaced 8 in. OC at perimeter and 12 in. OC in the field. For Joint Compound see Item 5. To be used with Lead Batten Strips (see Item 9) or Lead Discs or Tabs (see Item 10).
RAY-BAR ENGINEERING CORP — Type RB-LBG

4B. **Gypsum Board* —** (As an alternate to Item 4 Systems A, B, C, D, E, G, H, and I when used as the base layer, For direct attachment only) — Nominal 5/8 in. thick lead backed gypsum panels with beveled, square or tapered edges, applied vertically. Vertical joints centered over studs and staggered min 1 stud cavity on opposite sides of studs. Wallboard secured to studs with 1-1/4 in. long Type S-12 (or #6 by 1-1/4 in. long bugle-head fine driller) steel screws spaced 8 in. OC at perimeter and 12 in. OC in the field.
NEW ENGLAND LEAD BURNING CO INC, DBA NELCO — Type Nelco

4C. **Gypsum Board* —** (As an alternate to Item 4 Systems A, B, C, D, E, G, H, and I when used as the base layer, For direct attachment only) — Nom 5/8 or 3/4 in. thick lead backed gypsum panels with beveled, square or tapered edges, applied vertically. Vertical joints centered over 20 MSG steel studs and staggered min 1 stud cavity on opposite sides of studs. See Items 1, 2, 2A, 2B and 2D. Wallboard secured to studs with 1-1/4 in. long Type S-12 steel screws spaced 8 in. OC at perimeter and 12 in. OC in the field. For Joint Compound see Item 5. To be used with Lead Batten Strips (see Item 9A) or Lead Discs (see Item 10A). Lead batten strips, min 2 in. wide, max 10 ft long with a max thickness of 0.140 in. placed on the face of studs and attached to the stud with two 1 in. long Type S-8 pan head steel screws, one at the top of the strip and one at the bottom of the strip.
MAYCO INDUSTRIES INC — Type X-Ray Shielded Gypsum

4D. **Gypsum Board* —** (As an alternate to Item 4 Systems A, B, C, D, E, G, H, and I when used as the base layer, For direct attachment only) — Nom 5/8 in. thick lead backed gypsum panels with beveled, square or tapered edges, applied vertically. Vertical joints centered over studs and staggered min 1 stud cavity on opposite sides of studs. Wallboard secured to studs with 1-1/4 in. long Type S-12 steel screws gypsum panel steel screws spaced 8 in. OC at perimeter and 12 in. OC in the field. Lead batten strips required behind vertical joints of lead backed gypsum wallboard and optional at remaining stud locations. Lead batten strips, min 2 in. wide, max 8 ft long with a max thickness of 0.14 in. placed on the face of studs and attached to the stud with construction adhesive and two 1 in. long Type S-12 pan head steel screws, one at the top of the strip and one at the bottom of the strip. Lead discs, nominal 3/8 in. diam by max 0.085 in. thick. Compression fitted or adhered over the screw heads. Lead batten strips and discs to have a purity of 99.9% meeting the Federal specification QQ-L-2011, Grade "C".
RADIATION PROTECTION PRODUCTS INC — Type RPP - Lead Lined Drywall

5. **Joint Tape and Compound —** (Not Shown)

Joints on outer layers of gypsum boards (Item 4 and 4A) covered with paper tape and joint compound. Paper tape and joint compound may be omitted when gypsum boards are supplied with square edges. Exposed screw heads covered with joint compound.

Systems A, B, C, E, F, G, H, I

6. **Batts and Blankets* —**

(Optional) — Mineral wool or glass fiber batts partially or completely filling stud cavity. Any mineral wool or glass fiber batt mineral bearing the UL Classification Marking as to Fire Resistance.

Systems A, B, E, F, G, H, I

Systems C & D

Min 3 in. (System C) and min 1-1/2 in. (System D) thick mineral wool batts, friction fitted between the studs and floor and ceiling runners.

ROCKWOOL — Type AFB, min. density 1.8 pcf / 28.8 kg/m^3

THERMAFIBER/OWENS CORNING — Type SAFB, SAFB FF

7. **Cementitious Backer Units* —** (System D) — Nom 1/2 or 5/8 in. thick panels, square edge, attached to studs over gypsum wallboard with 1-5/8 in. long Type S-12, corrosion resistant steel screws spaced 8 in. OC and staggered 8 in. from gypsum wall board screws. Joints covered with glass fiber mesh tape. Vertical joints staggered one stud cavity from gypsum wallboard joints. Horizontal joints staggered a min of 12 in. from the gypsum wallboard joints.
UNITED STATES GYPSUM CO — Type DCB

8. **Laminating Adhesive* —** (Optional, Not Shown) — Used to bond outer layer of Cementitious Backer Units (Item 7) to inner layers of Gypsum Board (Item 4) in System D. ANSI A136.1 Type 1 organic adhesive applied with 1/4 in. square notched trowel. See Adhesives (BYWR) in the Fire Resistance Directory or Adhesives (BJLZ) in the Building Materials Directory for names of Classified companies.

9. **Lead Batten Strips —** (Not Shown, For Use With Item 4A). — Lead batten strips, min 1-1/2 in. wide, max 10 ft long with a max thickness of 0.125 in. Strips placed on the interior face of studs and attached from the exterior face of the stud with two 1 in. long Type S-12 pan head steel screws, one at the top of the strip and one at the bottom of the strip. Lead batten strips to have a purity of 99.9% meeting the Federal specification QQ-L-2011, Grade "C". Lead batten strips required behind vertical joints of lead backed gypsum wallboard (Item 4A) and optional at remaining stud locations. Required behind vertical joints.

9A. **Lead Batten Strips —** (Not Shown, for use with Item 4C) — Lead batten strips, 2 in. wide, max 10 ft long with a max thickness of 0.140 in. Strips placed on the face of studs and attached to the stud with two min. 1 in. long min. Type S-8 pan head steel screws, one at the top of the strip and one at the bottom of the strip or with one min. 1 in. long min. Type S-8 pan head steel screw at the top of the strip. Lead batten strips to have a purity of 99.9% meeting the Federal specification QQ-L-2011, Grades "B, C or D". Lead batten strips required behind vertical joints of lead backed gypsum wallboard (Item 4) and optional at remaining stud locations.

10. **Lead Discs or Tabs —** (Not Shown, For Use With Item 4A) — Used in lieu of or in addition to the lead batten strips (Item 9) or optional at other locations - Max 3/4 in. diam by max 0.125 in. thick lead discs compression fitted or adhered over steel screw heads or max 1/2 in. by 1-1/4 in. by max 0.125 in. thick lead tabs placed on gypsum boards (Item 4A) underneath screw locations prior to the installation of the screws. Lead discs or tabs to have a purity of 99.9% meeting the Federal specification QQ-L-2011, Grade "C".

10A. **Lead Discs —** (Not Shown, for use with Item 4C) — Max 5/16 in. diam by max 0.140 in. thick lead discs compression fitted or adhered over steel screw heads. Lead discs to have a purity of 99.5% meeting the Federal Specification QQ-L-2011, Grades "B, C or D".

wallboard.

9. **Joint Compound —** 1/32 in. thick on bottom and sides of wallboard from corner beads and feathered out. Paper tape embedded in joint compound over joints with edges of compound feathered out.

10. **Protective Material — Spray-Applied Fire Resistive Materials* —** Spray applied to the underside of the steel floor units, filling the flutes of the units and providing a smooth ceiling which was 1/4 in. thick as measured from the bottom plane of the floor units.
See Spray-Applied Fire Resistive Materials (CHPX) category for names of manufacturers.

11. **Alternate Joint System —** (Not Shown) — For lath only. A 1/16 in. thickness of gypsum plaster applied to entire exposed surface over either paper tape on joints embedded in cementitious compound or 2 1/2 in. wide glass fiber tape stapled 8 in. OC on joints.

12. **Alternate Construction - Steel Framing Members* —** As an alternate to Items 3, 4, 5 and 6 steel clips attached to both sides of beam flanges 2 ft OC and at ends of beam. First layer of gypsum board fastened to steel clips with 1-1/4 in. long Type S drywall screws, 2 in. by 2 in. 25 MSG angle fastened to clips on bottom portion of assembly with 2 in. long Type S drywall screws. Second layer of gypsum board fastened to angle and steel clips with 2 in. long Type S drywall screws, spaced 2 ft OC. Screws are self-drilling and self-tapping Phillips head made of case-hardened steel.
JOHN WAGNER ASSOCIATES INC, DBA GRABBER — Type CB Clip.

*** Indicates such products shall bear the UL or cUL Certification Mark for jurisdictions employing the UL or cUL Certification (such as Canada), respectively.**

Last Updated on 2023-02-22

The appearance of a company's name or product in this database does not in itself assure that products so identified have been manufactured under UL Solutions' Follow - Up Service. Only those products bearing the UL Mark should be considered to be Certified and covered under UL Solutions' Follow - Up Service. Always look for the Mark on the product.

UL Solutions permits the reproduction of the material contained in Product iQ subject to the following conditions: 1. The Guide Information, Assemblies, Constructions, Designs, Systems, and/or Certifications (files) must be presented in their entirety and in a non-misleading manner, without any manipulation of the data (or drawings). 2. The statement "Reprinted from Product iQ with permission from UL Solutions" must appear adjacent to the extracted material. In addition, the reprinted material must include a copyright notice in the following format: "©2023 UL LLC."

Feedback

2G. **Steel Framing Members* —** (Optional, Not Shown) — Furring channels and Steel Framing Members as described below. Not to be used with Type FRX-G gypsum board, lead backed gypsum boards (Item 4A-4D), or cementitious backer units (Item 7).
a. **Furring Channels —** Formed of No. 25 MSG galv. steel. Spaced 24 in. OC perpendicular to studs. Channels secured to studs as described in Item 2Gb. Ends of adjoining channels overlapped 6 in. and tied together with double strand of No. 18 AWG galvanized steel wire. Gypsum board attached to furring channels as described in Item 4.

b. **Steel Framing Members* —** Used to attach furring channels (Item 2Ga) to studs. Clips spaced 24 in. OC., and secured to studs with No. 8 x 2-1/2 in. coarse drywall screw through the center hole. Furring channels are friction fitted into clips.
REGUPOL AMERICA — Type SonusClip

2H. **Steel Framing Members* —** (Optional, Not Shown) — Resilient channels and Steel Framing Members as described below. Not to be used with Type FRX-G gypsum board, lead backed gypsum boards (Items 4A-4D), or cementitious backer units (Item 7).
a. **Furring Channels —** Formed of No. 25 MSG galv. steel, spaced 24 in. OC, and perpendicular to studs. Channels secured to studs as described in Item b. Ends of adjoining channels overlapped 6 in. and secured in place with two No. 8 15 x 1/2 in. Phillips Modified Truss screws spaced 2-1/2 in. from the center of the overlap. Gypsum board attached to resilient channels as described in Item 4.

b. **Steel Framing Members* —** Used to attach resilient channels (Item 2Ha) to studs. Clips spaced 48 in. OC., and secured to studs with No. 8 x 2-1/2 in. coarse drywall screw through the center hole. Resilient channels are secured to clips with one No. 10 x 1/2 in. pan-head self-drilling screw.
KEENE BUILDING PRODUCTS CO INC — Type RC+ Assurance Clip

2I. **Steel Framing Members* —** (Optional, Not Shown) — For use with single or double layer systems. Furring channels and Steel Framing Members as described below. Not to be used with Type FRX-G gypsum board, lead backed gypsum boards (Items 4A-4D), or cementitious backer units (Item 7).
a. **Furring Channels —** Formed of No. 25 MSG galv steel. 2-23/32 in. wide by 7/8 in. deep, spaced max. 24 in. OC perpendicular to studs. Channels secured to studs as described in item b. Gypsum board installed vertically only and attached to furring channels as described in Item 4.

b. **Steel Framing Members* —** Used to attach furring channels (Item 2Ia) to studs (Item 2 or 2A). Clips spaced max. 24 in. OC., and secured to studs with No. 8 x 1-1/2 in. minimum self-drilling, S-12 steel screw through the center grommet. Furring channels are friction fitted into clips.
CLARKDIETRICH BUILDING SYSTEMS — Type ClarkDietrich Sound Clip

2J. **Steel Studs** — (Not Shown) — "C-T" shaped studs, min. 2-1/2 in. deep (min. 4 in. deep when System C is used), fabricated from min. 25 MSG (min. 20 MSG when Items 2D, 4A, 4B, 4C, 4D, or 7 is used) galv. steel. Cut to length. 3/8 to 1/2 in. less than floor-to-ceiling height and spaced 24 in. or 600 mm OC (max. 16 in. OC when Items 4A, 4B, 4C, or 4D are used).

2K. **Steel Studs** — As an alternate to Item 2, for use with Item 1A — "I"-shaped studs fabricated from min. 25 MSG galv. steel (min 20 MSG when Item 4A, 4B, 4C, 4D, or 7 are used.), min. 2-1/2 in. deep. 1-1/2 in. wide. Studs contain 3/4 in. wide by 2-1/4 in. high holding tabs spaced 2-3/4 in. OC. Cut to lengths 5/8 in. less than floor-to-ceiling height and spaced 24 in.

SCAFCO STEEL STUD MANUFACTURING CO — I-Stud Shaftwall Steel Framing System

3. **Gypsum Board* —** Gypsum liner panels, nom 1 in. thick, 24 in. or 600 mm (for metric spacing) wide. Panels cut 1 in. less in length than floor to ceiling height. Vertical edges inserted in "T" shaped section of C-T studs, "H" portion of "C-H" studs, the holding tabs of the "I" shaped stud, or the gap between the two 3/4 in. legs of the "E" studs. Free edge of end panels attached to long leg of vertical "J" - runners with 1-5/8 in. long Type S steel screws spaced not greater than 12 in. OC. When wall height exceeds liner panel length, liner panel may be butted to extend to the full height of the wall. Horizontal joints need not be backed by steel framing. In System I, butt joints in liner panels are staggered min 36 in. Butt joints backed with 6 in. by 22 in. strips of 3/4 in. thick gypsum wallboard (Item 4). Wallboard strips centered over butt joints and secured to liner panels with six 1-1/2 in. long Type G steel screws, three screws along the 22 in. dimension at the top and bottom of the strips. For all systems, when J-shaped Runners (Item 1) are supplied with securement tabs, free edge of end panels may be secured by bending the securement tabs, max. 12 in. OC, to a 90 degree angle to securely friction-fit panels in J-shaped runners.
CGC INC — Type SLX

UNITED STATES GYPSUM CO — Type SLX

USG BORAL DRYWALL SFZ LLC — Type SLX

USG MEXICO S A DE C V — Type SLX

11. **Lead Batten Strips —** (Not Shown, For Use With Item 4B) — Lead batten strips, 2 in. wide, max 10 ft long with a max thickness of 0.142 in. Strips placed on the face of studs and attached to the stud with two min. 1 in. long min. Type S-8 pan head steel screws, one at the top of the strip and one at the bottom of the strip or with one min. 1 in. long min. Type S-8 pan head steel screw at the top of the strip. Lead batten strips to have a purity of 99.9% meeting the Federal specification QQ-L-2011, Grade "C". Lead batten strips required behind vertical joints of lead backed gypsum wallboard (Item 4B) and optional at remaining stud locations.

12. **Lead Tabs —** (Not Shown, For Use With Item 4B) — 2 in. wide, 5 in. long with a max thickness of 0.142 in. Tabs friction-fit around front face of stud, the stud folded back flange, and the back face of the stud. Tabs required at each location where a screw that secures the gypsum boards, Item 4B) will penetrate the steel stud. Lead tabs to have a purity of 99.9% meeting the Federal specification QQ-L-2011, Grade "C". Lead tabs may be held in place with standard adhesive tape if necessary.

*** Indicates such products shall bear the UL or cUL Certification Mark for jurisdictions employing the UL or cUL Certification (such as Canada), respectively.**

Last Updated on 2025-07-31

The appearance of a company's name or product in this database does not in itself assure that products so identified have been manufactured under UL Solutions' Follow - Up Service. Only those products bearing the UL Mark should be considered to be Certified and covered under UL Solutions' Follow - Up Service. Always look for the Mark on the product.

UL Solutions permits the reproduction of the material contained in Product iQ subject to the following conditions: 1. The Guide Information, Assemblies, Constructions, Designs, Systems, and/or Certifications (files) must be presented in their entirety and in a non-misleading manner, without any manipulation of the data (or drawings). 2. The statement "Reprinted from Product iQ with permission from UL Solutions" must appear adjacent to the extracted material. In addition, the reprinted material must include a copyright notice in the following format: "©2023 UL LLC."

Feedback

Reprinted from Product iQ with permission from UL Solutions.

anjali grant design LLC
3427 BEACON AVE S
SEATTLE 98144
ANJALI@AGRANTDESIGN.COM
206-512-4209

3700 E MERCER WAY
BARNABIE POINT PROJECT

NO.	DATE	DESCRIPTION
1	10/22/2025	BLDG PERMIT CORRECTIONS

4 JUNE 2025
BUILDING PERMIT

PROJECT:

UL ASSEMBLY U415 & N501

A-703

Coming October 20th, discover our sleek new design and powerful features. Learn More

Design/System/Construction/Assembly Usage Disclaimer

- Authorities Having Jurisdiction should be consulted in all cases as to the particular requirements covering the installation and use of UL Certified products, equipment, system, devices, and materials.
- Authorities Having Jurisdiction should be consulted before construction.
- Fire resistance assemblies and products are developed by the design submitter and have been investigated by UL for compliance with applicable requirements. The published information cannot always address every construction nuance encountered in the field.
- When field issues arise, it is recommended the first contact for assistance be the technical service staff provided by the product manufacturer noted for the design. Users of fire resistance assemblies are advised to consult the general Guide Information for each product category and each group of assemblies. The Guide Information includes specifics concerning alternate materials and alternate methods of construction.
- *Only* products which bear UL's Mark are considered Certified.

BXUV - Fire Resistance Ratings - ANSI/UL 263 Certified for United States
BXUV7 - Fire Resistance Ratings - CAN/ULC-S101 Certified for Canada

See General Information for Fire resistance Ratings - ANSI/UL 263 Certified for United States
Design Criteria and Allowable Variances

See General Information for Fire Resistance Ratings - CAN/ULC-S101 Certified for Canada
Design Criteria and Allowable Variances

Design No. U419

August 8, 2025

Nonbearing Wall Ratings — 1, 2, 3 or 4 Hr (See Items 4 & 5 through 5J)
*** Indicates such products shall bear the UL or cUL Certification Mark for jurisdictions employing the UL or cUL Certification (such as Canada), respectively.**

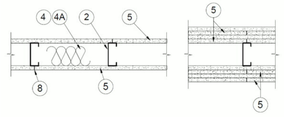

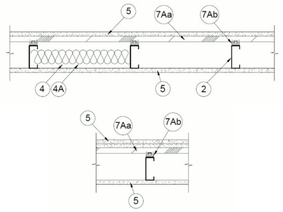

1. **Floor and Ceiling Runners —** (Not Shown) — For use with Item 2 — Channel shaped, fabricated from min 25 MSG corrosion-protected steel, min depth to accommodate stud size, with min 1-1/4 in. long legs, attached to floor and ceiling with fasteners 24 in. OC max.

1A. **Framing Members* — Floor and Ceiling Runner —** Not Shown — In lieu of Item 1 — For use with Item 2B, proprietary channel shaped runners, 3-5/8 in. deep attached to floor and ceiling with fasteners 24 in. OC max.
CEMCO, LLC — Viper25™ Track
CRACO MFG INC — SmartTrack25™
MARINO/WARE, DIV OF WARE INDUSTRIES INC — Viper25™ Track
IMPERIAL MANUFACTURING GROUP INC — Viper25™ Track

1B. **Framing Members* — Floor and Ceiling Runner —** Not Shown — In lieu of Item 1 — For use with Item 2C, proprietary channel shaped runners, 1-1/4 in. wide by 1-5/8 in. deep fabricated from min 0.018 in. thick galv steel, attached to floor and ceiling with fasteners spaced 24 in. OC max.
CEMCO, LLC — Viper20™ Track
MARINO/WARE, DIV OF WARE INDUSTRIES INC — Viper20™ Track
IMPERIAL MANUFACTURING GROUP INC — Viper20™ Track

1C. **Framing Members* — Floor and Ceiling Runners —** (Not Shown) — In lieu of Item 1 — Channel shaped, attached to floor and ceiling with fasteners 24 in. OC. max.
ALLSTEEL & GYPSUM PRODUCTS INC — Type SUPREME D24/30EQD and Type SUPREME D20
CONSOLIDATED FABRICATORS CORP, BUILDING PRODUCTS DIV — Type SUPREME D24/30EQD and Type SUPREME D20
QUAIL RUN BUILDING MATERIALS INC — Type SUPREME D24/30EQD and Type SUPREME D20
SCAFCO STEEL STUD MANUFACTURING CO — Type SUPREME D24/30EQD and Type SUPREME D20
STEEL CONSTRUCTION SYSTEMS INC — Type SUPREME D24/30EQD and Type SUPREME D20
TELLING INDUSTRIES L L C — Type SUPREME D24/30EQD and Type SUPREME D20

1D. **Floor and Ceiling Runners —** (Not Shown) — For use with Item 2A — Channel shaped, fabricated from min 20 MSG corrosion-protected or galv steel, min depth to accommodate stud size, with min 1 in. long legs, attached to floor and ceiling with fasteners spaced max 24 in. OC.
CLARKDIETRICH BUILDING SYSTEMS — CD ProTRAK
DMFCWBS L L C — ProTRAK
MBA METAL FRAMING — Pro TRAK
RAM SALES L L C — Ram ProTRAK
STEEL STRUCTURAL PRODUCTS L L C — Tri-S ProTRAK

1E. **Framing Members* — Floor and Ceiling Runners —** (Not Shown; As an alternate to Item 1) — For use with Items 2E, 5F or 5G or 5I only, channel shaped, fabricated from min. 0.015 in. (min bare-metal thickness) galvanized steel, attached to floor and ceiling with fasteners 24 in. OC. max.
CLARKDIETRICH BUILDING SYSTEMS — CD ProTRAK
DMFCWBS L L C — ProTRAK
MBA METAL FRAMING — Pro TRAK
RAM SALES L L C — Ram ProTRAK
STEEL STRUCTURAL PRODUCTS L L C — Tri-S ProTRAK

1F. **Framing Members* — Floor and Ceiling Runner —** Not Shown — In lieu of Item 1 — For use with Item 2F, proprietary channel shaped runners, minimum width to accommodate stud size, with 1- 1/8 in. long legs fabricated from min 0.015 in. (min bare metal thickness) galv steel, attached to floor and ceiling with fasteners spaced 24 in. OC max.
SUPER STUD BUILDING PRODUCTS — The Edge

1G. **Framing Members* — Floor and Ceiling Runner —** For use with Item 2G, proprietary channel shaped runners, minimum width to accommodate stud size attached to floor and ceiling with fasteners 24 in. OC max.
STUDCO BUILDING SYSTEMS — CROCSTUD Track

1H. **Floor and Ceiling Runners —** (Not Shown) — Channel shaped, fabricated from min 0.02 in. galv steel, min width to accommodate stud size as specified below and fabricated from min 0.018 in. galv steel or thicker, attached to floor and ceiling with fasteners spaced max 24 in. OC.
MARINO/WARE, DIV OF WARE INDUSTRIES INC — Viper20™ Track VT100
IMPERIAL MANUFACTURING GROUP INC — Viper20™ Track VT100

1I. **Framing Members* — Floor and Ceiling Runners —** (Not Shown, As an alternate to Item 1) — For use with Items 2H, channel shaped, fabricated from min. 0.015 in. (min bare metal thickness) galvanized steel, attached to floor and ceiling with fasteners 24 in. OC. max.
TELLING INDUSTRIES L L C — TRUE-TRACK™

1J. **Framing Members* — Floor and Ceiling Runner —** Not Shown — In lieu of Item 1 — For use with Item 2I, proprietary channel shaped runners, 3-5/8 in. deep attached to floor and ceiling with fasteners 24 in. OC max.

1K. **Framing Members* — Floor and Ceiling Runner —** Not Shown — In lieu of Item 1 — For use with Item 2J, proprietary channel shaped runners, 1-1/4 in. wide by 3-5/8 in. deep fabricated from min 0.018 in. thick galv steel, attached to floor and ceiling with fasteners spaced 24 in. OC max.

1L. **Framing Members* — Floor and Ceiling Runner —** Not Shown — In lieu of Item 1 — For use with Item 2N, proprietary channel shaped runners, 1-1/4 in. wide by min. 3-1/2 in. deep fabricated from min 0.018 in. thick galv steel, attached to floor and ceiling with fasteners spaced 24 in. OC max.
RESCUE METAL FRAMING, L L C — AlphaTRAK

1M. **Framing Members* — Floor and Ceiling Runners —** Not Shown — As an alternate to Item 1 — For use with Item 2O, proprietary channel shaped runners, min width to accommodate stud size, galv steel, attached to floor and ceiling with fasteners spaced 24 in. OC max.

UNITED METAL PRODUCTS INC — Type SUPREME D24/30EQD and Type SUPREME D20

1N. **Framing Members* — Floor and Ceiling Runners —** Not Shown — As an alternate to Item 1 — For use with Item 2P, proprietary channel shaped runners, min width to accommodate stud size, galv steel, attached to floor and ceiling with fasteners spaced 24 in. OC max.
OEG BUILDING MATERIALS — OEG Track

1O. **Framing Members* — Floor and Ceiling Runner —** Not Shown — In lieu of Item 1 — For use with Item 2Q, proprietary channel shaped runners, min width to accommodate stud size, fabricated from min. 25 MSG (0.018 in. min. bare metal thickness), attached to floor and ceiling with fasteners spaced 24 in. OC max.
CEMCO, LLC — Viper X Track

1P. **Framing Members* — Floor and Ceiling Runner —** (Not Shown — Alternate to Item 1) — For use with Item 2R, channel shaped runners pre-equipped with proprietary attachment clips. Min. 3-5/8 in. wide. Legs of top runners minimum 3-1/4 in. wide. Legs of bottom runners minimum 1-1/2 in. wide. Runners attached to floor and ceiling with fasteners 24 in. OC max.
HYPERFRAME INC - Hypertrack

1Q. **Framing Members* — Floor and Ceiling Runner —** Not Shown — In lieu of Item 1 — For use with Item 2S , proprietary channel shaped runners, min width to accommodate stud size, fabricated from min. 20 EQ/22 mils. (min. 0.0221 in. thick) galvanized steel, attached to floor and ceiling with fasteners spaced 24 in. OC max.
JJC INTERNATIONAL DISTRIBUTORS — Non-structural Tracks 3-5/8" and 6".

1R. **Framing Members* — Floor and Ceiling Runner —** Not Shown — In lieu of Item 1 — For use with Item 2T, proprietary channel shaped runners ,min width to accommodate stud size, fabricated from min. 25 MSG (0.018 in. min. bare metal thickness), attached to floor and ceiling with fasteners spaced 24 in. OC max
IRONLINE METALS LLC — Bantam Track.

2. **Steel Studs —** Channel shaped, fabricated from min 25 MSG corrosion-protected steel, min depth as indicated under Item 5, spaced a max of 24 in. OC. Studs to be cut 3/8 to 3/4 in. less than assembly height.

2A. **Steel Studs —** (As an alternate to Item 2, For use with Items 5B, 5E, 5H, 5J or Type ULI0) — Channel shaped, fabricated from min 20 MSG corrosion-protected or galv steel, 3-1/2 in. min depth, spaced a max of 16 in. OC. Studs friction-fit into floor and ceiling runners. Studs to be cut 5/8 to 3/4 in. less than assembly height.

2B. **Framing Members* - Steel Studs —** (As an alternate to Item 2, For use with Items SC, SI or Type ULI0) — Proprietary channel shaped studs, 3-5/8 in. deep spaced a max of 24 in. OC. Studs to be cut 3/4 in less than the assembly height and installed with a 1/2 in. gap between the end of the stud and track at the bottom of the wall. For direct attachment of gypsum board only.
CEMCO, LLC — Viper25™
CRACO MFG INC — SmartStud25™
MARINO/WARE, DIV OF WARE INDUSTRIES INC — Viper25™
IMPERIAL MANUFACTURING GROUP INC — Viper25™

2C. **Framing Members* — Steel Studs —** Not Shown — In lieu of Item 2 — proprietary channel shaped steel studs, min depth as indicated under Item 5, spaced a max if 24 in. OC, fabricated from min 0.018 in. thick galv steel. Studs cut 3/8 in. to 3/4 in. less in lengths than assembly heights.
CEMCO, LLC — Viper20™
MARINO/WARE, DIV OF WARE INDUSTRIES INC — Viper20™
IMPERIAL MANUFACTURING GROUP INC — Viper20™

2D. **Framing Members* — Steel Studs —** In lieu of Item 2 — Channel shaped studs, min depth as indicated under Item 5, spaced a max of 24 in. OC. Studs to be cut 3/4 in. less than assembly height.
ALLSTEEL & GYPSUM PRODUCTS INC — Type SUPREME D24/30EQD and Type SUPREME D20
CONSOLIDATED FABRICATORS CORP, BUILDING PRODUCTS DIV — Type SUPREME D24/30EQD and Type SUPREME D20
QUAIL RUN BUILDING MATERIALS INC — Type SUPREME D24/30EQD and Type SUPREME D20
SCAFCO STEEL STUD MANUFACTURING CO — Type SUPREME D24/30EQD and Type SUPREME D20
STEEL CONSTRUCTION SYSTEMS INC — Type SUPREME D24/30EQD and Type SUPREME D20
TELLING INDUSTRIES L L C — Type SUPREME D24/30EQD and Type SUPREME D20
UNITED METAL PRODUCTS INC — Type SUPREME D24/30EQD and Type SUPREME D20

2E. **Framing Members* — Steel Studs —** (Not Shown, As an alternate to Item 2) — For use with Items SF or SG or SJ or Type ULIX only, channel shaped studs, min depth as indicated under Item 5F, 5G or 5I, fabricated from min. 0.015 in. (min bare metal thickness) galvanized steel, spaced a max of 24 in. OC. Studs to be cut 3/4 in. less than assembly height.
CLARKDIETRICH BUILDING SYSTEMS — CD ProSTUD
DMFCWBS L L C — ProSTUD
MBA METAL FRAMING — ProSTUD
RAM SALES L L C — Ram ProSTUD
STEEL STRUCTURAL PRODUCTS L L C — Tri-S ProSTUD

2F. **Framing Members* — Steel Studs —** Not Shown — In lieu of Item 2 — proprietary channel shaped steel studs, minimum width indicated under Item 5, 1-1/4 in. deep fabricated from min 0.015 in. (min bare metal thickness) galvanized steel. Studs 3/8 in. to 3/4 in. less in lengths than assembly heights.
SUPER STUD BUILDING PRODUCTS — The Edge

2G. **Framing Members* — Steel Studs —** Not Shown — In lieu of Item 2 — proprietary channel shaped studs, minimum width indicated under Item 5, Studs to be cut 3/8 to 3/4 in less than the assembly height.
STUDCO BUILDING SYSTEMS — CROCSTUD

2H. **Framing Members* — Steel Studs —** (Not Shown, As an alternate to Item 2) — Fabricated from min. 0.015 in. (min bare metal thickness) galvanized steel, spaced a max of 24 in. OC. Studs to be cut 3/4 in. less than assembly height.
TELLING INDUSTRIES L L C — TRUE-STUD™

2I. **Framing Members* — Steel Studs —**

2J. **Framing Members* — Metal Studs —** Not Shown — In lieu of Item 2 — proprietary channel shaped steel studs, min depth as indicated under Item 5, spaced a max if 24 in. OC, fabricated from min 0.018 in. thick galv steel. Studs cut 3/8 in. to 3/4 in. less in lengths than assembly heights

2K. **Framing Members* — Steel Studs —** As an alternate to Item 2 — For use with Item 1, channel shaped studs, fabricated from min 25 MSG corrosion-protected steel, min depth as indicated under Item 5, spaced a max of 24 in. OC. Studs to be cut 3/8 to 3/4 in. less than assembly height.
EB METAL INC — NITROSTUD

2L. **Framing Members* — Steel Studs —** As an alternate to Item 2 — For use with Item 1, channel shaped studs, fabricated from min 25 MSG corrosion-protected steel, min depth as indicated under Item 5, spaced a max of 24 in. OC. Studs to be cut 3/8 to 3/4 in. less than assembly height.
OLMAR SUPPLY INC — PRIMESTUD

2M. **Framing Members* — Steel Studs —** As an alternate to Item 2 — For use with Item 1, channel shaped studs, fabricated from min 25 MSG corrosion-protected steel, min depth as indicated under Item 5, spaced a max of 24 in. OC. Studs to be cut 3/8 to 3/4 in. less than assembly height.
MARINO/WARE, DIV OF WARE INDUSTRIES INC — StudRite™

2N. **Framing Members*— Steel Studs —** As an alternate to Item 2 — proprietary channel shaped steel studs, min depth 3-1/2 in. and as indicated under Item 5, spaced a max of 24 in. OC, fabricated from min 0.018 in. thick galv steel. Studs cut 3/8 in. to 3/4 in. less in length than assembly height.
RESCUE METAL FRAMING, L L C — AlphaSTUD

2O. **Framing Members* — Steel Studs —** As an alternate to Item 2 — proprietary channel shaped steel studs, min width as indicated under Item 5, galv steel. Studs to be cut 3/8 to 3/4 in. less in lengths than assembly height. Spaced 24 in. OC max.
RONDO BUILDING SERVICES PTY LTD — Rondo Lipped Wall Stud

2P. **Framing Members* — Steel Studs —** As an alternate to Item 2 — proprietary channel shaped steel studs, min width as indicated under Item 5, min 25 MSG galv steel. Studs to be cut 3/8 to 3/4 in. less in lengths than assembly height. Spaced 24 in. OC max.
OEG BUILDING MATERIALS — OEG Stud

2Q. **Framing Members* — Steel Studs —** Not Shown — In lieu of Item 2 — For use with Item 1Q, proprietary channel shaped steel studs, min depth as indicated under Item 5, spaced a max of 24 in. OC, fabricated from min 25 MSG (0.018 in. min. bare metal thickness). Studs cut 3/8 in. to 3/4 in. less in lengths than assembly heights.
CEMCO, LLC — Viper X

2R. **Framing Members* — Steel Studs —** (Not Shown — Alternate to Item 2, For use with Item 1P) — Channel shaped steel studs with attachment clips at top and bottom; min 3-5/8 in. depth, spaced a max of 24 in. OC. Studs clipped into floor and ceiling runners (Item 1P). Max 2-3/8 in. extension reveal from top of stud to inside of ceiling runner.
HYPERFRAME INC— Hyperstud

2S. **Framing Members* — Steel Studs —** Not Shown — In lieu of Item 2 — For use with Item 1Q, proprietary channel shaped steel studs, min depth as indicated under Item 5, spaced a max of 24 in. OC, fabricated from min. 20 EQ/22 mils. (min. 0.0221 in. thick) galvanized steel. Studs cut 3/8 in. to 3/4 in. less in lengths than assembly heights.
JJC INTERNATIONAL DISTRIBUTORS — Non-structural Studs 3-5/8" and 6".

2T. **Framing Members* — Steel Studs —** Not Shown — In lieu of Item 2 — For use with Item 1R, proprietary channel shaped steelstuds, min depth as indicated under Item 5, spaced a max of 24 in. OC, fabricated from min 25 MSG (0.018 in. min. bare-metal thickness). Studs cut 3/8 in. to 3/4 in. less in lengths than assembly heights.
IRONLINE METALS LLC — Bantam Stud.

3. **Wood Structural Panel Sheathing —** (Optional, For use with Item 5 Only) — (Not Shown) — 4 ft wide, 7/16 in. thick oriented strand board (OSB) or 15/32 in. thick structural 1 sheathing (plywood) complying with DOC PS1 or PS2, or APA Standard PRP-108, manufactured with exterior glue, applied horizontally or vertically to the steel studs. Vertical joints centered on studs, and staggered one stud space from wallboard joints. Attached to studs with flat-head self-drilling tapping screws with a min. head diam. of 0.250 in. at maximum 6 in. OC. in the perimeter and 12 in. OC. in the field. When used, gypsum panels attached over OSB or plywood panels and fastener lengths for gypsum panels increased by min. 1/2 in.

4. **Batts and Blankets* —** (Required as indicated under Item 5) — Mineral wool batts, friction fitted between studs and runners. Min nom thickness as indicated under Item 5.
See **Batts and Blankets** (BKNV or BZJZ) Categories for names of Classified companies.

steel screws. Not for use with Items 5B, 5E, 5H, or 5J.

7A. **Framing Members* —** (Optional on one or both sides, not shown, for single or double layer systems) — As an alternate to Item 7, furring channels and Steel Framing Members as described below:
a. **Furring Channels —** Formed of No. 25 MSG galv steel. 2-9/16 in. or 2-23/32 in. wide by 7/8 in. deep, spaced max. 24 in. OC perpendicular to studs. Channels secured to studs as described in item b. Gypsum board attached to furring channels as described in item 6. Not for use with Items 5B, 5E, 5H, or 5J.

b. **Steel Framing Members* —** Used to attach furring channels (Item 7Aa) to studs (Item 2). Clips spaced max. 48 in. OC. RSIC-1 and RSIC-1 (2.75) clips secured to studs with No. 8 x 1-1/2 in. minimum self-drilling, 5-1/2 steel screw through the center grommet. RSIC-V and RSIC-V (2.75) clips secured to studs with No. 8 x 9/16 in. minimum self-drilling, 5-12 steel screw through the center hole. Furring channels are friction fitted into clips. RSIC-1 and RSIC-V clips for use with 2-9/16 in. wide furring channels. RSIC-1 (2.75) and RSIC-V (2.75) clips for use with 2-23/32 in. wide furring channels.
PAC INTERNATIONAL L L C — Types RSIC-1, RSIC-V, RSIC-1 (2.75), RSIC-V (2.75).

7B. **Framing Members* —** (Optional, Not Shown) — As an alternate to Item 7, for single or double layer systems, furring channels and Steel Framing Members on only one side of steel as described below:
a. **Furring Channels —** Formed of No. 25 MSG galv steel, spaced 24 in. OC perpendicular to studs. Channels secured to studs as described in Item b. Batts and Blankets placed in stud cavity as described in Item 5. Two layers of gypsum board attached to furring channels as described in Item 5. Not for use with Items 5B, 5E, 5H, or 5J.

b. **Steel Framing Members* —** Used to attach furring channels (Item 7Ba) to one side of studs (Item 2) only. Clips spaced 48 in. OC., and secured to studs with two No. 8 x 2-1/2 in. coarse drywall screws, one through the hole at each end of the clip. Furring channels are friction fitted into clips.
KINETICS NOISE CONTROL INC — Type Isomax

7C. **Framing Members* —** (Not Shown) — (Optional on one or both sides, not shown, for single or double layer systems) — As an alternate to Item 7, furring channels and Steel Framing Members as described below:
a. **Furring Channels —** Formed of No. 25 MSG galv steel. 2-3/8 in. wide by 7/8 in. deep, spaced max. 24 in. OC perpendicular to studs. Channels secured to studs as described in Item b. Gypsum board attached to furring channels as described in item 6. Not for use with Items 5B, 5E, 5H, or 5J.

b. **Steel Framing Members* —** Used to attach furring channels (Item 7Ca) to studs (Item 2). Clips spaced max. 48 in. OC. GENIECLIPS secured to studs with No. 8 x 1-1/2 in. minimum self-drilling, 5-12 steel screw through the center grommet. Furring channels are friction fitted into clips.
PLITEQ INC — Type GENIECLIP

7D. **Steel Framing Members* —** (Optional on one or both sides, not shown, for single or double layer systems) — Furring channels and Steel Framing Members as described below:
a. **Furring Channels —** Formed of No. 25 MSG galv steel. Spaced 24 in. OC perpendicular to studs. Channels secured to studs as described in Item b. Ends of adjoining channels overlapped 6 in. and tied together with double strand of No. 18 AWG galvanized steel wire. Gypsum board attached to furring channels as described in item 6. Not for use with Items 5B, 5E, 5H, or 5J.

b. **Steel Framing Members* —** Used to attach furring channels (Item 7Da) to studs. Clips spaced 48 in. OC., and secured to studs with 2 in. coarse drywall screw with 1 in. diam washer through the center hole. Furring channels are friction fitted into clips
STUDCO BUILDING SYSTEMS — RESILMOUNT Sound Isolation Clips - Type A237 or A237R

7E. **Steel Framing Members* —** (Optional on one or both sides, not shown, for single or double layer systems) — Furring channels and Steel Framing Members as described below:
a. **Furring Channels —** Formed of No. 25 MSG galv steel. Spaced 24 in. OC perpendicular to studs. Channels secured to studs as described in Item 7Eb. Ends of adjoining channels overlapped 6 in. and tied together with double strand of No. 18 AWG galvanized steel wire. Gypsum board attached to furring channels as described in Item 6. Not for use with Items 5B, 5E, 5H, or 5J.

b. **Steel Framing Members* —** Used to attach furring channels (Item 7Ea) to studs. Clips spaced 48 in. OC., and secured to studs with No. 8 x 2-1/2 in. coarse drywall screw through the center hole. Furring channels are friction fitted into clips.
RIGUPOL AMERICA — Type SonusClip

7F. **Steel Framing Members* —** (Optional on one or both sides, not shown, for single or double layer systems) — Resilient channels and Steel Framing Members as described below:
a. **Resilient Channels —** Formed of No. 25 MSG galv steel, spaced 24 in. OC, and perpendicular to studs. Channels secured to studs as described in Item b. Ends of adjoining channels overlapped 6 in. and secured in place with two No. 8 15 x 1/2 in. Phillips Modified Truss screws spaced 2-1/2 in. from the center of the overlap. Gypsum board attached to resilient channels as described in Item 6. Not for use with Items 5B, 5E, 5H, or 5J.

b. **Steel Framing Members* —** Used to attach resilient channels (Item 7Fa) to studs. Clips spaced 48 in. OC, and secured to studs with No. 8 x 2-1/2 in. coarse drywall screw through the center hole. Resilient channels are secured to clips with one No. 10 x 1/2 in. pan-head self-drilling screw.
KEENE BUILDING PRODUCTS CO INC — Type RC+ Assurance Clip

7G. **Framing Members* —** (Optional on one or both sides, not shown, for single or double layer systems) — As an alternate to Item 7, furring channels and Steel Framing Members as described below:
a. **Furring Channels —** Formed of No. 25 MSG galv steel. 2-23/32 in. wide by 7/8 in. deep, spaced max. 24 in. OC perpendicular to studs. Channels secured to studs as described in Item b. Gypsum board attached to furring channels as described in Item 6. Not for use with Items 5B, 5E, 5H, or 5J.

b. **Steel Framing Members* —** Used to attach furring channels (Item 7Ga) to studs (Item 2). Clips spaced max. 48 in. OC. Clips secured to studs with No. 8 x 1-1/2 in. minimum self-drilling, 5-12 steel screw through the center hole. Furring channels are friction fitted into clips.
CLARKDIETRICH BUILDING SYSTEMS — Type ClarkDietrich Sound Clip

7H. **Framing Members* —** (Optional on one or both sides, not shown, for single or double layer systems) — As an alternate to Item 7, furring channels and Steel Framing Members as described below:

a. **Furring Channels —** Formed of No. 25 MSG galv steel. 2-23/32 in. wide by 7/8 in. deep, spaced 24 in. OC perpendicular to studs. Channels secured to studs as described in Item b. Ends of adjoining channels are overlapped 6 in. and tied together with double strand of No. 18 SWG galv steel wire near each end of overlap. As an alternate, ends of adjoining channels may be overlapped 6 in. and secured together with two self-tapping #6 framing screws, min. 7/16 in. long at the midpoint of the overlap, with one screw on each flange of the channel. Gypsum board attached to furring channels as described in item 6. Not for use with Items 5B, 5E, 5H, or 5J.

b. **Steel Framing Members* —**Used to attach furring channels (Item 7Ha) to studs. Clips spaced 48 in. OC. staggered on adjacent furring channels and secured to studs with one No. 8 x 2-1/2 in. screw and washer through the center hole. Furring channels are friction fitted into clips.

ISOTECH INDUSTRIES INC. — Type ISOSTUD

8. **Joint Tape and Compound —** Vinyl or casein, dry or premixed joint compound applied in two coats to joints and screw heads of outer layers. Paper tape, nom 2 in. wide, embedded in first layer of compound over all joints of outer layer panels. Paper tape and joint compound may be omitted when gypsum panels are supplied with a square edge.

9. **Siding, Brick or Stucco —** (Optional, Not Shown) — Aluminum, vinyl or steel siding, brick veneer or stucco, meeting the requirements of local code agencies, installed over gypsum panels. Brick veneer attached to studs with corrugated metal wall ties attached to each stud with steel screws, not more than each sixth course of brick.

10. **Caulking and Sealants* —** (Optional, Not Shown) — A bead of acoustical sealant applied around the partition perimeter for sound control.
UNITED STATES GYPSUM CO — Type AS

11. **Lead Batten Strips —** (Not Shown, For Use With Item 5B) — Lead batten strips, min 1-1/2 in. wide, max 10 ft long with a max thickness of 0.125 in. Strips placed on the interior face of studs and attached from the exterior face of the stud with two 1 in. long Type S-12 pan head steel screws, one at the top of the strip and one at the bottom of the strip. Lead batten strips to have a purity of 99.9% meeting the Federal specification QQ-L-201f, Grade "C". Lead batten strips required behind vertical joints of lead backed gypsum wallboard (Item 5B) and optional at remaining stud locations. Required behind vertical joints.

4	1-5/8	4 layers, 1/2 in. thick	Optional
4	2-1/2	2 layers, 3/4 in. thick	2 in.

CGC INC — 1/2 in. thick Type C, IP-X2 or IPC-AR; WRC, 5/8 in. thick Type AR, C, IP-AR, IP-X1, IP-X2, IPC-AR, SCX, SHX, ULIX, WRX or WRC, 3/4 in. thick Types IP-X3 or ULTRACODE
THE SIAM GYPSUM INDUSTRY (SONGKHLA) CO — 1/2 in. thick Type C and 5/8 in. thick Type SCX
UNITED STATES GYPSUM CO — 1/2 in. thick Type C, IP-X2, IPC-AR or WRC; 5/8 in. thick Type SCX, SGX, SHX, ULIX, WRX, IP-X1, AR, C, WRC, FRX-G, IP-AR, IP-X2, IPC-AR; 3/4 in. thick Types IP-X3 or ULTRACODE
USG BORAL DRYWALL SFZ LLC — 1/2 in. Type C, 5/8 in. Types C, SCX, SGX, ULTRACODE
USG MEXICO S A DE C V — 1/2 in. thick Type C, IP-X2, IPC-AR or WRC; 5/8 in. thick Type AR, C, IP-AR, IP-X1, IP-X2, IPC-AR, SCX, SHX, WRX, WRC or, 3/4 in. thick Types IP-X3 or ULTRACODE

When trim 7B, **Steel Framing Members***, is used, Nonbearing Wall Rating is limited to 1 Hr. Min. stud depth is 3-1/2 in., min, thickness of insulation (Item 4) is 3 in, and two layers of gypsum board panels (1/2 in. or 5/8 in. thick) shall be attached to furring channels as described in Item 6. One layer of gypsum board panels (1/2 in. or 5/8 in. thick) attached to opposite side of stud without furring channels as described in Item 6.

5A. **Gypsum Board* —** (As an alternate to Item 5) — 5/8 in. thick, 24 to 54 in. wide, applied horizontally as the outer layer to one side of the assembly. Secured as described in Item 6.
CGC INC — Type SHX
UNITED STATES GYPSUM CO — Type FRX-G, SHX.
USG MEXICO S A DE C V — Type SHX.

5B. **Gypsum Board* —** (Not Shown) — As an alternate to Item 5 when used as the base layer on one or both sides of wall when 5/8 or 3/4 in. thick products are specified. For direct attachment only to steel studs Item 2A, (not to be used with Item 3) — Nom 5/8 in. or 3/4 in. may be used as alternate to all 5/8 in. or 3/4 in. shown in Item 5, Wallboard Protection on Each Side of Wall table. Nom 5/8 in. or 3/4 in. thick lead backed gypsum panels with beveled, square or tapered edges, applied vertically. Vertical joints centered over studs and staggered min 1 stud cavity on opposite sides of studs. Gypsum board secured to 20 MSG steel studs Item 2A with 1-1/4 in. long Type S-12 steel screws spaced 8 in. OC at perimeter and 12 in. OC in the field. To be used with Lead Batten Strips (see Item 11) or Lead Discs or Tabs (see Item 12).
RAY-BAR ENGINEERING CORP — Type RB-LBG

5C. **Gypsum Board* —** (For Use With Item 2B) — Rating Limited to 1 Hour. 5/8 in. thick, 48 in. wide, Gypsum panels with beveled, square or tapered edges, applied vertically or horizontally. (Vertical Application) - The gypsum board is to be installed on each side of the studs with 1 in. long Type S coated steel screws spaced 8 in. OC starting 4 in. from the edge of the board at the vertical edges and 12 in. OC starting 6 in. from the edge of the board at the center of each board. Gypsum boards are to be secured to the top and bottom track with screws spaced 8 in. OC starting 4 in. from the board edge. Fasteners shall not penetrate through both the stud and the track at the same time. Vertical joints are to be centered over studs and staggered one stud cavity on opposite sides of studs. (Horizontal Application) - The gypsum board is to be installed on each side of the studs with 1 in. long Type S coated steel screws spaced 8 in. OC starting 4 in. from the edge of the board at the vertical edges and 12 in. OC starting 6 in. from the edge of the board at the center of each board. Gypsum boards are to be secured to the top and bottom track with screws spaced 8 in. OC starting 4 in. from the board edge. Fasteners shall not penetrate through both the stud and the track at the same time. All horizontal joints are to be backed as outlined under section VI of Volume 1 in the Fire Resistive Directory.
CGC INC — Type SCX, ULIX.
THE SIAM GYPSUM INDUSTRY (SONGKHLA) CO — Type SCX
UNITED STATES GYPSUM CO — Type SCX, SGX, ULIX.
USG BORAL DRYWALL SFZ LLC — Type SCX
USG MEXICO S A DE C V — Type SCX

5D. **Gypsum Board* —** (As an alternate to Item 5) — 5/8 in. thick, 48 in. wide, applied vertically or horizontally. Secured as described in Item 6. For use with Items 1 and 2 only.
CGC INC — Type USGX

11A. **Lead Batten Strips —** (Not Shown, For Use With Item 5H) — Lead batten strips, 2 in. wide, max 10 ft long with a max thickness of 0.140 in. Strips placed on the face of studs and attached to the stud with two min. 1 in. long min. Type S-8 pan head steel screws, one at the top of the strip and one at the bottom of the strip or with one min. 1 in. long min. Type S-8 pan head steel screw at the top of the strip. Lead batten strips to have a purity of 99.5% meeting the Federal Specification QQ-L-201f, Grades "B, C or D". Lead batten strips required behind vertical joints of lead backed gypsum wallboard and optional at remaining stud locations.

12. **Lead Discs or Tabs —** (Not Shown, For Use With Item 5B) — Used in lieu of or in addition to the lead batten strips (Item 11) or optional at other locations - Max 3/4 in. diam by max 0.125 in. thick lead discs compression fitted or adhered over steel screw heads or max 1/2 in. by 1-1/4 in. by max 0.125 in. thick lead tabs placed on gypsum boards (Item 5B) underneath screw locations prior to the installation of the screws. Lead discs or tabs to have a purity of 99.9% meeting the Federal specification QQ-L-201f, Grade "C".

12A. **Lead Discs —** (Not Shown, for use with Item 5H) — Max 5/16 in. diam by max 0.140 in. thick lead discs compression fitted or adhered over steel screw heads. Lead discs to have a purity of 99.5% meeting the Federal Specification QQ-L-201f, Grades "B, C or D".

13. **Lead Batten Strips —** (Not Shown, For Use With Item 5E) — Lead batten strips, 2 in wide, max 10 ft long with a max thickness of 0.142 in. Strips placed on the face of studs and attached to the stud with two min. 1 in. long min. Type S-8 pan head steel screws, one at the top of the strip and one at the bottom of the strip or with one min. 1 in. long min. Type S-8 pan head steel screw at the top of the strip. Lead batten strips to have a purity of 99.9% meeting the Federal specification QQ-L-201f, Grade "C". Lead batten strips required behind vertical joints of lead backed gypsum wallboard (Item 5E) and optional at remaining stud locations.

14. **Lead Tabs —** (Not Shown, For Use With Item 5E) — 2 in. wide, 5 in. long with a max thickness of 0.142 in. Tabs friction-fit around front face of stud, the stud folded back flange, and the back face of the stud. Tabs required at each location where a screw (that secures the gypsum boards, Item 5E) will penetrate the steel stud. Lead tabs to have a purity of 99.9% meeting the Federal Specification QQ-L-201f, Grade "C". Lead tabs may be held in place with standard adhesive tape if necessary.

15. **Barrier Mesh —** (Optional, Not Shown) - Attached to steel studs on one or both sides of the wall using Barrier Mesh Clips spaced at maximum 12 inches on center vertically, using a flat head type screw penetrating through the steel at least 3/8 of an inch. For Steel Studs less than 0.033 inches in thickness, use self-piercing screws. For Steel Studs equal to or greater than 0.033 inches in thickness, use steel-drill screws (self-tapping). Gypsum Board (Item 5) to be installed directly over the Barrier Mesh using prescribed screw patterns with lengths increased by a minimum 1/8 in. Barrier Mesh may be installed with the long dimension of the diamond pattern positioned vertically or horizontally. Barrier Mesh joints may occur as butt joints at the framing members and secured using the Barrier Mesh Clips or occur in between framing members as overlapping joints secured using 18 SWG wire ties spaced a maximum 12 in. on center.
CLARKDIETRICH BUILDING SYSTEMS — Barrier Mesh, Barrier Mesh Clips

*** Indicates such products shall bear the UL or cUL Certification Mark for jurisdictions employing the UL or cUL Certification (such as Canada), respectively.**

Last Updated on 2025-08-08

The appearance of a company's name or product in this database does not in itself assure that products so identified have been manufactured under UL Solutions' Follow - Up Service. Only those products bearing the UL Mark should be considered to be Certified and covered under UL Solutions' Follow - Up Service. Always look for the Mark on the product.

UL Solutions permits the reproduction of the material contained in Product iQ subject to the following conditions: 1. The Guide Information, Assemblies, Constructions, Designs, Systems, and/or Certifications (files) must be presented in their entirety and in a non-misleading manner, without any manipulation of the data (or drawings).

GENERAL NOTES

I. Introduction

B.E.E. Consulting, LLC (BEE) has created building envelope concept design details for the **Barnabie Point K-8**. The Building Envelope drawings are intimately related to the materials specified in the project material specifications and building inspection. Details provided by BEE are only for use on the **Barnabie Point K-8** and are © copyrighted.

Each sheet in this set of Building Envelope drawings, bearing the BEE Titleblock and Logo in the upper right corner, was prepared by BEE and is accounted for in the drawing index on the title page. In its original form, this set was prepared for **Herzl Ner-Tamid Conservative Congregation** for a specific project.

The act of submitting for government approval of building permit, a set of drawings bearing the BEE titleblock and logo, which has been altered in any way by **Herzl Ner-Tamid Conservative Congregation**, by any third party, or for a project other than that which it was originally prepared by BEE without the prior written consent of BEE shall constitute consent by **Herzl Ner-Tamid Conservative Congregation** to defend, indemnify, and hold harmless BEE from and against any and all claims, suits, demands, liabilities, losses, and costs arising in whole or in part out of or in any way connected with the use of the such altered drawings by **Herzl Ner-Tamid Conservative Congregation** or any third party.

Such alterations shall include, but shall not be limited to, the addition or removal of individual sheets, the modifications of any graphic or textual information contained within a sheet prepared by BEE. The removal of this statement, and any construction inconsistent with that which has been shown by BEE in its original drawing set.

II. General

A. Water Penetration Resistance Field Testing

For all windows, doors, and skylights a mock setup will be water intrusion tested in field. Mock setup may be created in-situ or be free standing as best suits the needs of the project, provided it allows for the following parameters to be achieved.

At least one (1) window of each operational type will be tested to the Specified Field Test Pressure specified below, in accord with the current version of ASTM E1105. For windows and doors such as aluminum, wood clad aluminum, vinyl, or fiberglass windows and doors, Procedure B (cyclic) test will be used for 4 cycles each 5 minutes in duration, with a pressure reduced to 0 psf for one minute between cycles. For storefront and curtain wall assemblies, Procedure A (Uniform) test will be used for a single cycle of 15 minutes in duration. The initial test will be inclusive of both installation interface and window product. In the case of failure (defined as any water intrusion observed on the interior that is not in a drainage area), the representative sample will be expanded to three (3) specimens in order to obtain statistical confidence. In the case of failure during retest, the representative sample will be expanded to five (5) additional specimens. In the case of a failure during second retest, a meeting will be held with all parties concerned to determine necessary actions. In the case of failure, the responsible party will be held financially liable for the cost of retesting, and any related wall assembly or cladding deconstruction needed to obtain passing results. This test specification supersedes AAMA Voluntary Specification for Field Testing.

Regardless of AAMA deductions for field installed product, the minimum Water Resistance Field Test Pressure (during field test), as determined by the consultant, shall be:

6.0 psf for storefronts
6.0 psf for windows

The above referenced test pressures should be placed on the purchase order prior to ordering the windows or doors.

Doors are to be installed and tested in a similar fashion as windows.

B. Louvers

Louvers through the building envelope shall be designed for exterior use in accord with wind and rain exposure conditions.

C. Sealant Performance Requirements

All sealants shall be validated and approved by the Sealant Waterproofing and Restoration Institute (SWRI).

Sealant and Self Adhesive Membrane (S.A.M.) combinations shall have documentation from the manufacturer that adhesion is acceptable prior to construction.

As part of the quality control procedures, sealant dependant installations require an adhesion test performed on site by the contractor.

D. Laboratory Test Reports

All windows and doors shall be pre-tested by the manufacturer to design conditions.

The associated test records and certifications shall be submitted to project team.

E. Contractor Responsibility

It shall be the specific duty and responsibility of each trade and supplier to examine all project drawings, details and specifications, and to provide and furnish proper equipment, hardware, fixtures, materials, etc., pertaining to their part of the work shown or listed in any part of these documents. Quality control, adverse material reactions, and compliance to industry standard workmanship are the responsibility of the contractor.

Any omissions or contradictions in these documents shall be called to the attention of BEE prior to submitting a bid. Bids received shall be considered to include all items shown and/or specified or scheduled for a complete project. The contractor shall note that the waterproofing details do not always reflect the Architectural details and are intended to supplement the architectural details not replace them.

Installers are to be certified by manufacturer's approved warranty requirements.

F. Material Warranty

Products shall be installed to comply with manufacturer's warranty requirements. All waterproofing material and installation warranties shall be transferable to new building ownership within the warranty's period.

Specified Membrane Roof Systems are designed to receive the 20 year No Dollar Limit (NDL) coverage for the roofing system itself. Warranty coverage apart from this (including, but not limited to overburden, plant establishment, and wind riders) should be considered in the procurement process, with manufacturer confirmation of system eligibility for enhanced coverage at the time of Submittal.

G. Material Submittals/Substitutions

All recommended materials may be exchanged for materials with equal performance specifications. All material substitutions and submittals must be submitted to and approved by the responsible members of the design team. Substitutions and submittals shall include, but are not limited to, product data sheets, intended locations for use, installer certifications as required, sample warranties, testing and or certification data as required.

H. Fasteners

All fasteners, including nuts and washers, in contact with preservative-treated wood shall be of hot-dipped zinc coated galvanized steel or stainless steel.

III. Construction

A. Inspection

Building inspection shall be performed throughout the duration of construction. The frequency of inspection is identified in the contract. Inspections will be performed on site. Inspections will be documented and recorded as deemed necessary by the Project Manager.

B. Dry-in Requirements

Prior to the end of each shift, the structure will be temporarily weather protected using industry recognized standards to prevent damage to existing work in place and the structure.

The General Contractor (GC) shall provide quality assurance procedures, facilitate inspections and coordinate testing and verification to maintain the material standards and enveloping practices as specified herein. This shall also include periodically documenting the moisture content by weight at a minimum of three (3) locations of framing, sheathing and gypsum. Additionally, the temperature and moisture content of concrete slabs shall be monitored and periodically documented to comply with any relative waterproofing installations that are to be conducted. Documented signs of excessive water or humidity are exhibited by, but not limited to:

Interior condensation on window. Warping, staining, or delamination of fiber cement, gypsum or wood based products (i.e. construction products that are absorptive). Organic growth (mold, fungi, mildew). Water intrusion/leaks and or damage.

Roofs need to be installed prior to construction drying and wet substrates/framing shall not be directly covered with roofing or other finish materials. Permanently installed HVAC equipment is not to be used for the purpose of construction drying. Any questions pertaining to the allowable moisture percentage of specific materials shall be referred to the most applicable edition of the building code.

BEE ENGINEERS
170 W DAYTON ST, SUITE 206
EDMONDS, WA 98020
PH: 425 672-3900
FAX: 425 712-8608

PATRICK McMAHON
STATE OF WASHINGTON
28539
REGISTERED
PROFESSIONAL ENGINEER

BARNABIE POINT PROJECT
3700 E Mercer Way
Mercer Island, WA 98040

	DATE	DESCRIPTION
	01.02.2025	DESIGN DEVELOPMENT
	06.04.2025	BUILDING PERMIT
	08.20.2025	COORDINATION SET
	10.22.2025	BP CORRECTIONS
	12.15.2025	100% CD SET

PHASE:

4 JUNE 2025
BUILDING PERMIT

BEE PROJECT #: 2403-1017

P.E.: Patrick McMahon
P.M.: Patrick McMahon
ENERGY: Katya Bautista
DRAFTER: Denin Dazey

© COPYRIGHT BEE ENGINEERS

THESE DRAWINGS ARE FOR GENERAL ARRANGEMENT OF MATERIALS ON SITE CONDITIONS GOVERN. DO NOT SCALE DRAWINGS TO OBTAIN DIMENSIONS.

SHEET NAME:

NOTES & SPECIFICATIONS

SHEET NUMBER:

BE000

IV. Building Envelope Materials

071700 Bentonite Waterproofing

A. Bentonite Panel Systems

CETCO System

Note: Compression strength of insulation per CETCO recommendations.
All laps at hydrostatic shotcrete require foundation sealant.

- Available from CETCO

Bentonite Panel: Voltex DS
Bentonite Mastic: Bentoseal
Waterstop: Waterstop RX-101, with WB-Adhesive (3"min. cover)
Waterstop RX-101T, with WB-Adhesive (3"min. cover)
Foundation Drain Mat: Aquadrain 15x
Aquadrain 100BD (used at base of wall)
Transition Membrane: Envirosheet

B. Protection Board

Note: Per membrane mfr recommendation

C. Insulation

Note: R Value per UA calculations from energy consultant
Compressive strength per bentonite mfr

a. Below Grade Insulation

Rigid Insulation Per Arch

071900 Water Repellents

Notes: For use at exposed, vertical concrete at exterior building envelope.
All exposed, vertical concrete shall be treated.
All concrete cold joints at exposed concrete require waterstop.

A. Concrete & Concrete Block/Brick Sealer

Blok-Guard & Graffiti Control WB 6

Note: Two coats required.

- Available from Prosoco

072119 Foamed-In-Place Insulation

A. Spray Foam Insulation

Notes: The applied spray foam must be installed by a certified installer.
A copy of the ICC-ES report for the product used must be provided on the job site for field inspector verification.

Heatlok HFO Pro

Note: ICC-ES, ESR 4073

- Available from Huntsman Building Solutions

B. Air Barrier Foam

CF 812

- Available from Hilti

072500 Weather Resistant Barrier (W.R.B.)

A. Primary W.R.B. SA/W.R.B. SA Liner

WrapShield SA Self-Adhered

- Available from VaproShield

D. Liquid Applied Flashing

VaproLiqui-Flash

- Available from VaproShield

E. W.R.B. Accessories

Quickflash Device

Quickflash Device

Note: Use @ Electrical Boxes & Pipe Penetrations

- Available from Quickflash Weatherproofing Products

Sill Pans

Note: 5/8" min. upstand, extending 1/2" min. above bottom edge of Window.

a) L-Angle

Note: For use with SAM and/or Liquid applied sill pans.
If window is fastened to L-angle then confirm with window manufacturer for guage and fastening requirements.

1/8" Anodized Aluminum L-angle
22ga L-angle

Shims

1/8" Plastic Horseshoe Shims

- Available from Atlas Supply

SA Shims

1/4" VaproShims SA

Note: Used behind Horizontal Furring

- Available from VaproShield

G. Exterior Insulation

Notes: R Value per Architect
Compressive strength per cladding manufacturer

Rigid Insulation Per Arch

H. Furring Systems

Notes: Furring of all material types to be minimum of 3/4" deep & maintain 1/2" gaps at butt joints, floor plate level, and sill flanges.
Furring of all material types to be kept ½" clear from inside & outside corners
All rainscreen cavities shall have approved closure accessories to prevent debris & insect entry.

Perforated Horizontal Hat Channel

Perforated Horizontal Metal Hat Channel

Z-Girt

Metal Z-Girt

Thermal Girt

SMARTci GreenGirt CMH Z-girts

- Available from Advanced Architectural Products

Thermal Clip

SMARTci GreenGirt CMH Clip

- Available from Advanced Architectural Products

Cascadia Clip (Fiberglass Thermal Spacer)

- Available from Cascadia Windows & Doors

072600 Vapor Barriers/Retarders

A. Underslab Vapor Barrier

Note: Use 12" min lap and tape at all seams

Stego Wrap 15-mil

- Available from Stego Industries

B. Interior Vapor Retarder

Note: Install on the interior gypsum wall board of all assemblies that are a part of the thermal barrier.
For non-vented roof, do not apply Interior Vapor Retarder to the ceiling at roof level.

PVA Primer

074600 Siding

Note: All rainscreen cavities need to have approved closure accessories to prevent debris & insect entry.

Metal Wall Panels
Nichiha Siding
Insulated Concrete Faced Panels

075000 Roofing Membrane

Notes: All roofing shall slope positively to a drain with at least ¼" per linear foot slope. No water ponding is admissible.
All applicators must be approved by manufacturer.

Warranty Notes:
30yr NDL

A. Roofing Membrane

Sopralene 180/250 Torch Down
Field Base Ply: Sopralene Flam 180
Intermediate Sheet: Sopralene Flam 180
Field Cap Ply: Sopralene Flam 180 FR GR
Flashing Base Ply: Sopralene Flam Stick
Flashing Cap Ply: Sopralene Flam 250 FR GR

- Available from Soprema

B. Liquid Applied Roofing

Note: Use to detail curbs & penetrations.
Alsan RS 230 PMMA
Note: For use with Soprema Roofing Systems.

- Available from Soprema

C. Roof Vapor Barrier

Note: Self-Adhesive Vapor Barrier per roofing manufacturer recommendation. Seal vapor barrier at all transitions and laps per manufacturer recommendation.
Hot mop/torch applied vapor barrier per roofing manufacturer. All hot applied vapor barriers installed over combustible substrates require a suitably attached receiver sheet as recommend by the manufacturer.

D. Protection Board

Note: Per Roofing Membrane Manufacturer recommendation.

E. Roofing Accessories

Roof Rigid Insulation

Notes: R Value per Architect
Polyiso Insulation per manufacturer

D. Walkway Mats

Note: Unless otherwise noted by manufacturer, walkway mats shall be installed to areas or equipment requiring regular maintenance (once a month or more). Walkway mat layout per Arch.

Walkway mat per Roofing Membrane Manufacturer recommendation.

076200 Sheet Metal Flashing and Trim

A. Flashings

Note: All Saddle Flashings shall be fully soldered.
22ga Sheet Metal Coping, w/ Standing Seams
24ga Sheet Metal Head Flashings, w/ End Dams
24ga Sheet Metal Saddle Flashings
24ga Sheet Metal Through Wall Flashing, w/ 4" Bayonet Seams & End Dams
Note: Through Wall Flashings are required at every other floor & at each floor exceeding twenty feet.

A. Stainless Steel Flashings

24ga S.S. Flashing (for use at base of wall/parapet)

076500 Self-Adhesive Membrane (S.A.M.)

Notes: All Self-Adhered Membrane (S.A.M.) types to be roller applied.
Prime substrates per manufacturer recommendation prior to installing S.A.M.
Confirm compatibility between S.A.M. and other envelope products with manufacturer warranties.
Use approved primer when adhering to Concrete, Exterior Gypsum and Wood.

A. S.A.M. 1

Perm-A-Barrier Wall Flashing

- Available from GCP Applied Technologies

B. S.A.M. 2

3" VaproTape UV Black

- Available from VaproShield

C. S.A.M. Foil Faced

Protecto Seal 45 Butyl

- Available from Protecto Wrap Company

D. S.A.M. HT - High Temperature

Grace Ultra

Note: Not for use in conjunction with PVC materials.

- Available from GCP Applied Technologies

079000 Joint Protection

A. Compressive Foam

Backerseal

- Available from Emseal

B. Neoprene Pad

TEX-NEO60

Note: 60 Duro Neoprene Sheet

- Available by Texcel

C. Sill Seal

Protecto Energy Plate Liner

- Available from Protecto Wrap Company

079200 Joint Sealants

A. Sealant 1

Sikaflex HY 150

- Available from Sika

B. Sealant 2

Dowsil 758 Silicone

- Available from Dow Chemical Company

C. Sealant 4

Dowsil 795 Silicone

- Available from Dow Chemical Company

D. Sealant 5

Dowsil 758 Silicone

- Available from Dow Chemical Company

E. Sealant 6

Sikaflex-2c SL

- Available from Sika

G. Sealant 7

SikaLastomer-511

- Available from Sika Corporation

BA-98

- Available from Pecora Corporation

081000 Doors and Frames

Flanged Thermally Broken Hollow Metal Doors

Note: Provide with welded flange.
Weather stripping/sweeps required at all exterior doors and door separating conditioned and unconditioned space.

- Available from Ceco Door

085000 Windows

A. Flanged:

Vinyl

B. Storefronts

Kawneer

089000 Louvers and Vents

24ga Metal Vents

- Available from Allied Building Products
- Available from Primex Manufacturing

220000 Plumbing

Note: Drains used shall be warrantable with Waterproofing System

Drains

Thunderbird Flanged Drain

- Available from Thunderbird Products

260000 Electrical

Conduit

Water-tight PVC Coated Flexible Metallic Conduit YF-707

- Available from Delikon

BEE ENGINEERS
170 W DAYTON ST, SUITE 206
EDMONDS, WA 98020
PH: 425 672-3900
FAX: 425 712-8608

PATRICK McMAHON
STATE OF WASHINGTON
19029
REGISTERED
PROFESSIONAL ENGINEER

BARNABIE POINT PROJECT
3700 E Mercer Way
Mercer Island, WA 98040

	DATE	DESCRIPTION
	01.02.2025	DESIGN DEVELOPMENT
	06.04.2025	BUILDING PERMIT
	08.20.2025	COORDINATION SET
	10.22.2025	BP CORRECTIONS
	12.15.2025	100% CD SET

PHASE:

4 JUNE 2025
BUILDING PERMIT

BEE PROJECT #: 2403-1017

P.E.: Patrick McMahon
P.M.: Patrick McMahon
ENERGY: Katya Bautista
DRAFTER: Denin Dazey

© COPYRIGHT BEE ENGINEERS

THESE DRAWINGS ARE FOR GENERAL ARRANGEMENT OF MATERIALS ON SITE CONDITIONS GOVERN. DO NOT SCALE DRAWINGS TO OBTAIN DIMENSIONS.

SHEET NAME:

SPECIFICATIONS CONTINUED

SHEET NUMBER:

BE001

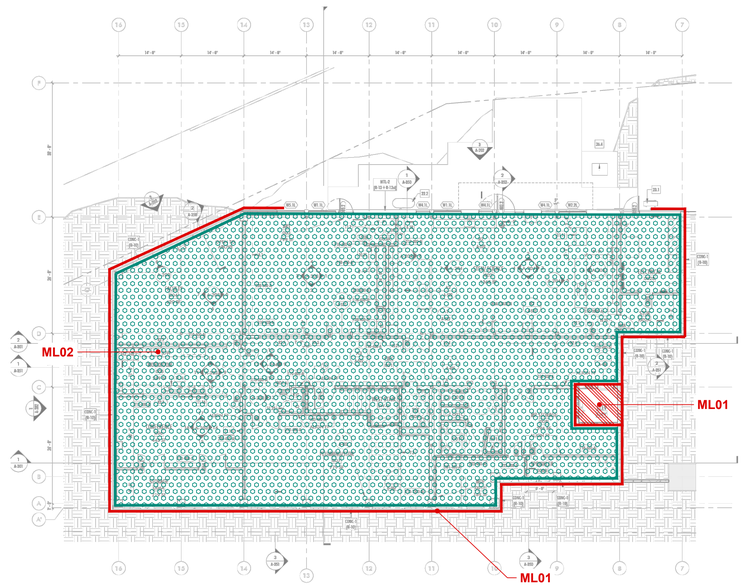

LEVEL B01

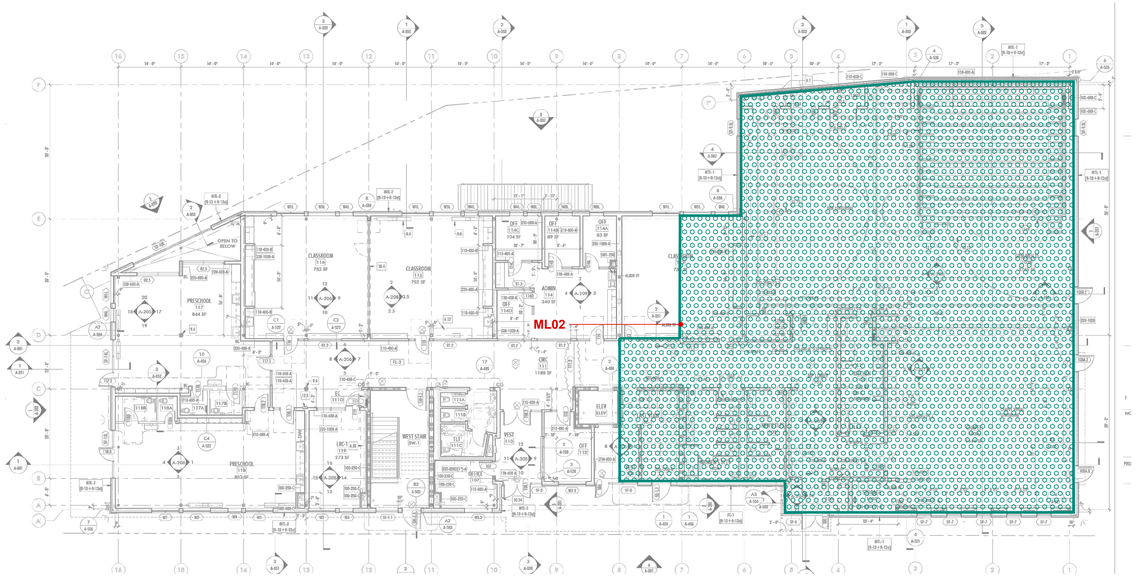

LEVEL L01

MATERIAL LOCATION KEY

ML01	BENTONITE PANELS
ML02	UNDERSLAB VAPOR BARRIER
ML03	STANDING SEAM METAL FLASHING
ML04	KNIFE PLATE ATTACHMENTS
ML05	ROOFING MEMBRANE

PLAN VIEWS WERE TAKEN FROM ARCH SET DATED 08.25.2025. THEY ARE DIAGRAMMATIC AND SHOULD NOT BE USED FOR MATERIAL TAKE-OFFS. FINAL BLDG PLANS SHOULD BE VERIFIED.

BEE ENGINEERS
170 W DAYTON ST, SUITE 206
EDMONDS, WA 98020
PH: 425 672-3900
FAX: 425 712-8608

PATRICK McMAHON
STATE OF WASHINGTON
28029365
REGISTERED
PROFESSIONAL ENGINEER

BARNABIE POINT PROJECT

3700 E Mercer Way
Mercer Island, WA 98040

	DATE	DESCRIPTION
	01.02.2025	DESIGN DEVELOPMENT
	06.04.2025	BUILDING PERMIT
	08.20.2025	COORDINATION SET
	10.22.2025	BP CORRECTIONS
	12.15.2025	100% CD SET

PHASE:

4 JUNE 2025
BUILDING PERMIT

BEE PROJECT #: 2403-1017

P.E.:	Patrick McMahon
P.M.:	Patrick McMahon
ENERGY:	Katya Bautista
DRAFTER:	Denin Dazey

© COPYRIGHT BEE ENGINEERS

THESE DRAWINGS ARE FOR GENERAL ARRANGEMENT OF MATERIALS ON SITE CONDITIONS GOVERN. DO NOT SCALE DRAWINGS TO OBTAIN DIMENSIONS.

SHEET NAME:

MATERIAL LOCATION DIAGRAMS

SHEET NUMBER:

BE002

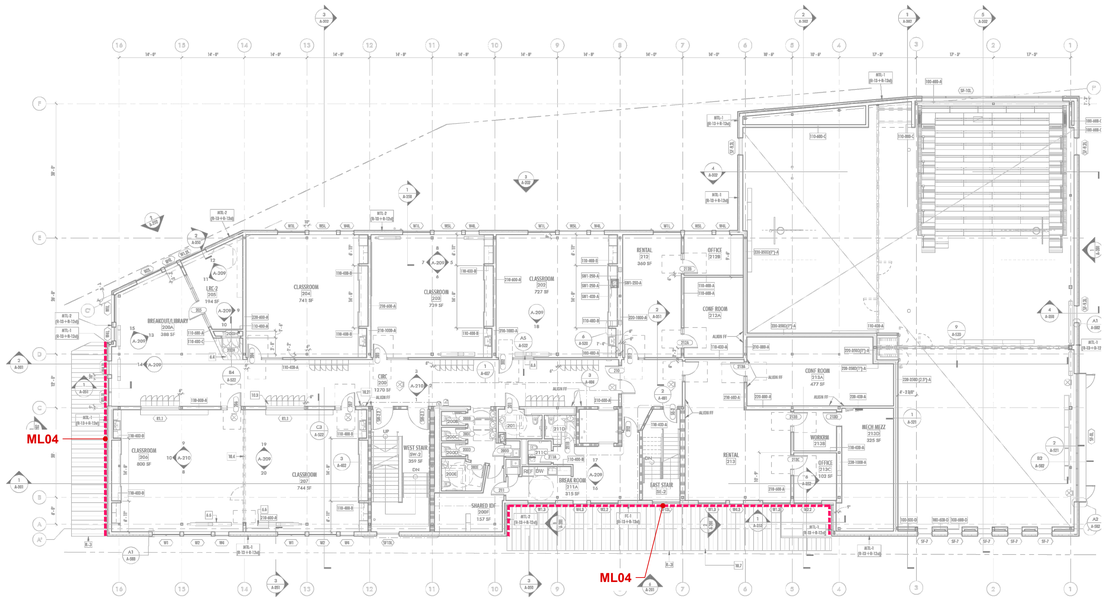

LEVEL L02

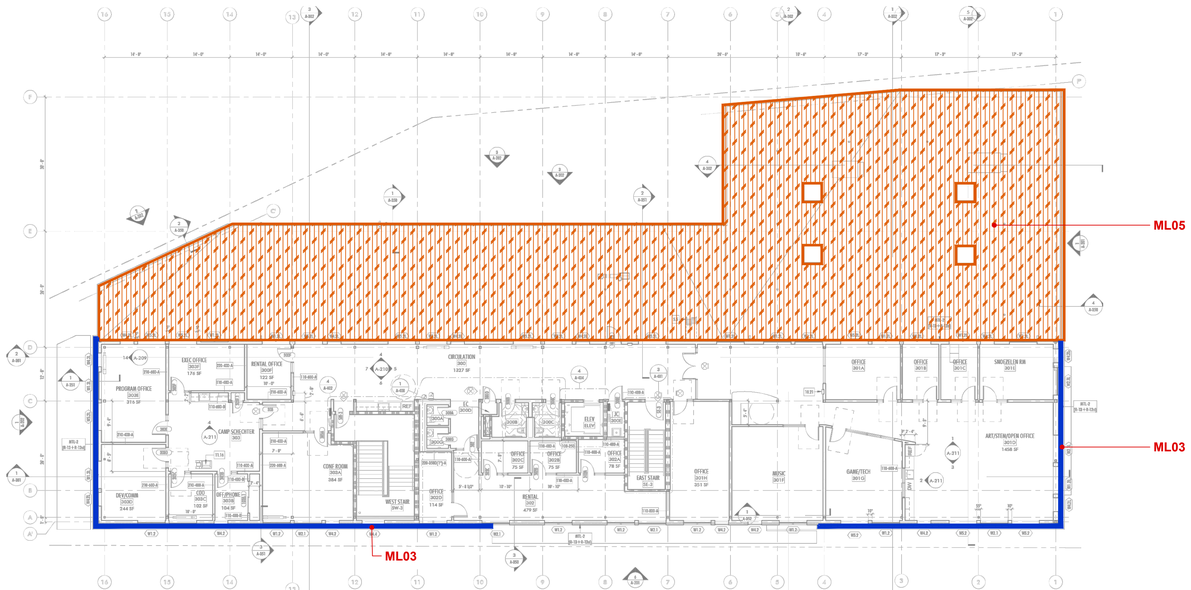

LEVEL L03

MATERIAL LOCATION KEY

ML01	BENTONITE PANELS
ML02	UNDERSLAB VAPOR BARRIER
ML03	STANDING SEAM METAL FLASHING
ML04	KNIFE PLATE ATTACHMENTS
ML05	ROOFING MEMBRANE

PLAN VIEWS WERE TAKEN FROM ARCH SET DATED 08.25.2025, THEY ARE DIAGRAMMATIC AND SHOULD NOT BE USED FOR MATERIAL TAKE-OFFS. FINAL BLDG PLANS SHOULD BE VERIFIED.

BEE ENGINEERS
170 W DAYTON ST, SUITE 206
EDMONDS, WA 98020
PH: 425 672-3900
FAX: 425 712-8608

PATRICK McMAHON
STATE OF WASHINGTON
34029365
REGISTERED
PROFESSIONAL ENGINEER

BARNABIE POINT PROJECT

3700 E Mercer Way
Mercer Island, WA 98040

DATE	DESCRIPTION
01.02.2025	DESIGN DEVELOPMENT
06.04.2025	BUILDING PERMIT
08.20.2025	COORDINATION SET
10.22.2025	BP CORRECTIONS
12.15.2025	100% CD SET

PHASE:

4 JUNE 2025
BUILDING PERMIT

BEE PROJECT #: 2403-1017

P.E.: Patrick McMahon
P.M.: Patrick McMahon
ENERGY: Katya Bautista
DRAFTER: Denin Dazey

© COPYRIGHT BEE ENGINEERS

THESE DRAWINGS ARE FOR GENERAL ARRANGEMENT OF MATERIALS ON SITE CONDITIONS GOVERN. DO NOT SCALE DRAWINGS TO OBTAIN DIMENSIONS.

SHEET NAME:

MATERIAL LOCATION DIAGRAMS

SHEET NUMBER:

BE003

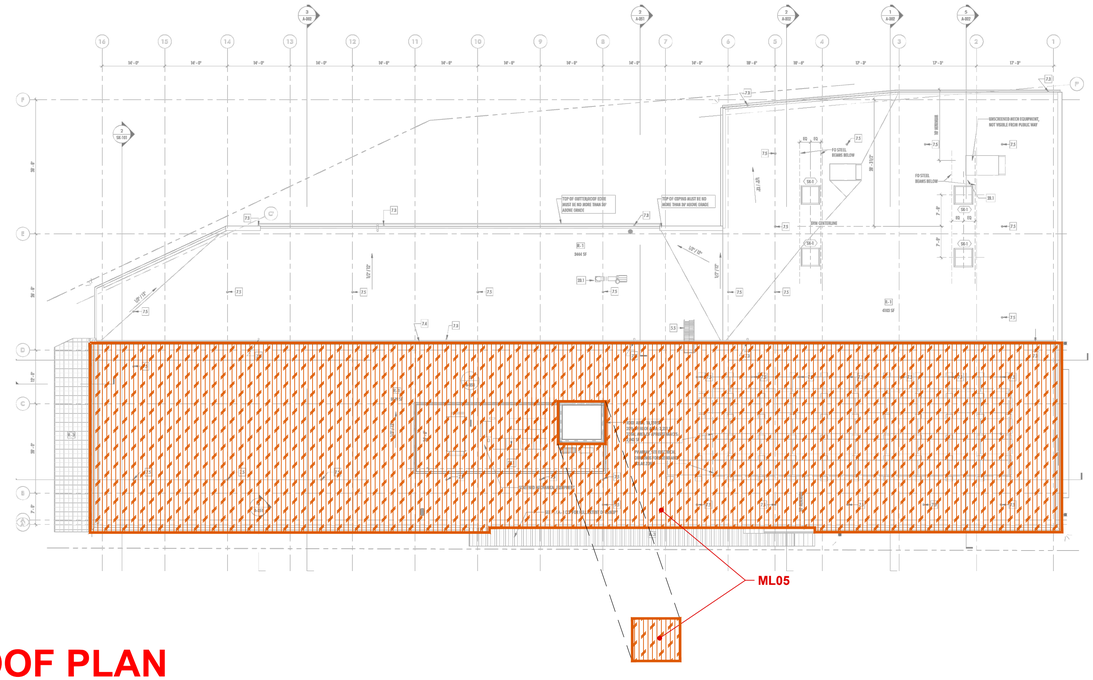

ROOF PLAN

MATERIAL LOCATION KEY

ML01	BENTONITE PANELS
ML02	UNDERSLAB VAPOR BARRIER
ML03	STANDING SEAM METAL FLASHING
ML04	KNIFE PLATE ATTACHMENTS
ML05	ROOFING MEMBRANE

PLAN VIEWS WERE TAKEN FROM ARCH SET DATED 08.25.2025. THEY ARE DIAGRAMMATIC AND SHOULD NOT BE USED FOR MATERIAL TAKE-OFFS. FINAL BLDG PLANS SHOULD BE VERIFIED.

BEE ENGINEERS
170 W DAYTON ST, SUITE 206
EDMONDS, WA 98020
PH: 425 672-3900
FAX: 425 712-8608

PATRICK McMAHON
STATE OF WASHINGTON
28029365
REGISTERED
PROFESSIONAL ENGINEER

BARNABIE POINT PROJECT
3700 E Mercer Way
Mercer Island, WA 98040

	DATE	DESCRIPTION
	01.02.2025	DESIGN DEVELOPMENT
	06.04.2025	BUILDING PERMIT
	08.20.2025	COORDINATION SET
	10.22.2025	BP CORRECTIONS
	12.15.2025	100% CD SET

PHASE:

4 JUNE 2025
BUILDING PERMIT

BEE PROJECT #: 2403-1017

P.E.: Patrick McMahon
P.M.: Patrick McMahon
ENERGY: Katya Baulista
DRAFTER: Denin Dazey

© COPYRIGHT BEE ENGINEERS

THESE DRAWINGS ARE FOR GENERAL ARRANGEMENT OF MATERIALS ON SITE CONDITIONS GOVERN. DO NOT SCALE DRAWINGS TO OBTAIN DIMENSIONS.

SHEET NAME:

MATERIAL LOCATION DIAGRAMS

SHEET NUMBER:

BE004

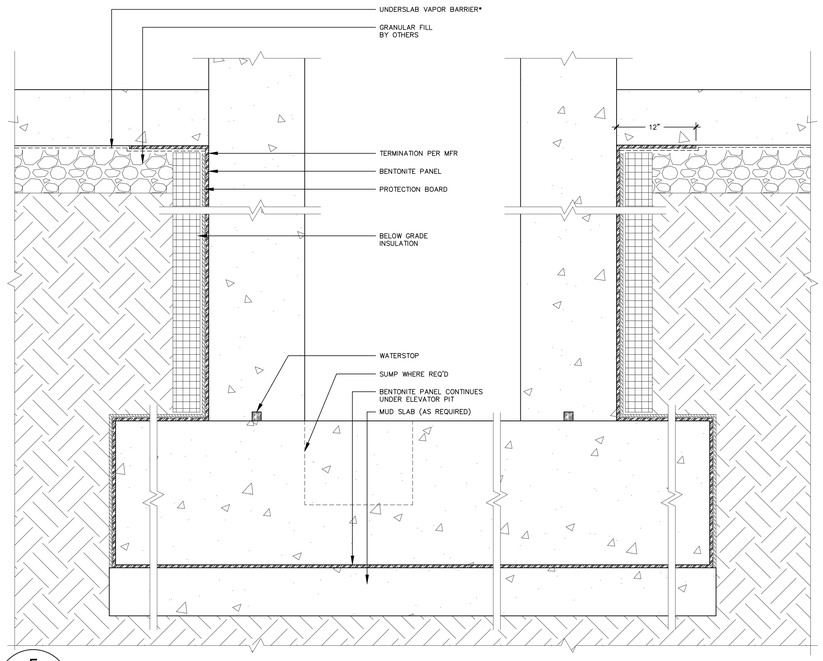

NOTES:
1. FRAMING PER ARCH.
2. *USE 12" LAPS & SEAL ALL PENETRATIONS, SEAMS, AND PERIMETER CONDITIONS W/ APPROVED ACCESSORIES PER MANUFACTURER.
3. REFER TO GEOTECH REPORT FOR DRAINAGE RECOMMENDATION..

5 BE100 REF. ARCH 5/A-506 — SECTION: TYPICAL ELEVATOR PIT

SCALE: NTS

© COPYRIGHT BEE ENGINEERS

NOTES:
1. SUB-GRADE: WATERSTOP REQUIRED AT EVERY COLD JOINT.
2. ABOVE GRADE: WATERSTOP REQUIRED AT ALL EXPOSED COLD JOINTS.

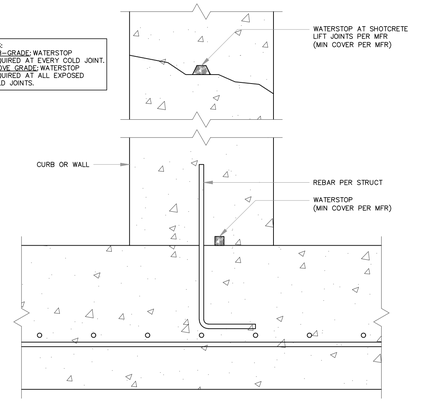

3 BE100 — SECTION: CONCRETE COLD JOINT

SCALE: NTS

© COPYRIGHT BEE ENGINEERS

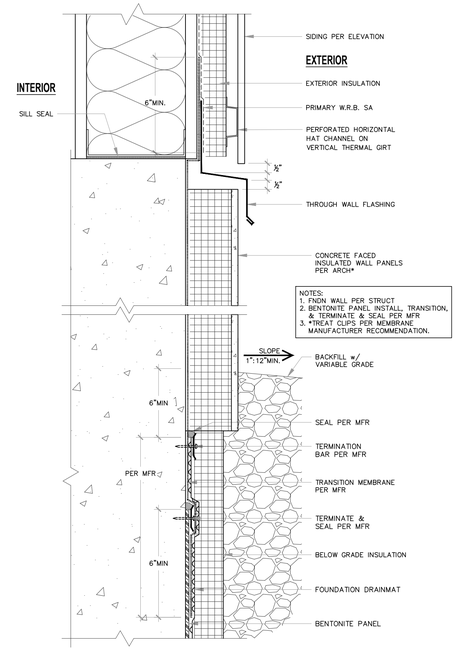

8 BE100 REF. ARCH A2/A-504 — SECTION: TERMINATION AT GRADE

SCALE: NTS

© COPYRIGHT BEE ENGINEERS

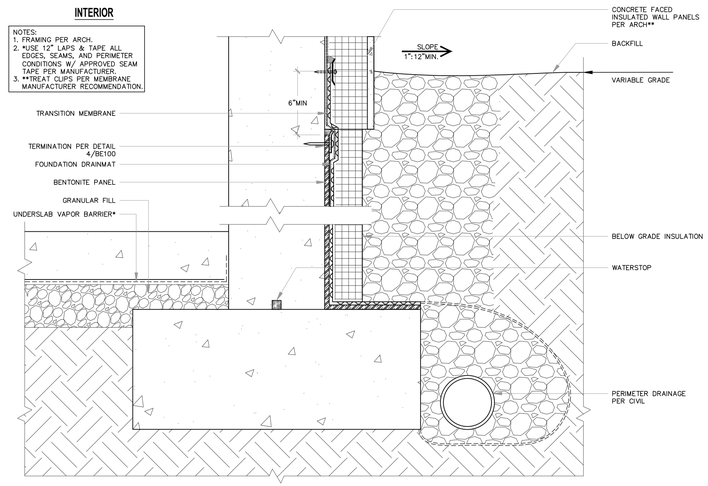

9 BE100 REF. ARCH A1/A-501 — SECTION: TYPICAL FOOTING

SCALE: NTS

© COPYRIGHT BEE ENGINEERS

NOTES:
1. FRAMING PER ARCH
2. FNDN PER STRUCT
3. MEMBRANE INSTALL, TRANSITION, & TERMINATE & SEAL PER MFR
4. *USE 12" LAPS & TAPE ALL EDGES, SEAMS, AND PERIMETER CONDITIONS w/ APPROVED SEAM TAPE PER MANUFACTURER
5. REFER TO GEOTECH REPORT FOR DRAINAGE RECOMMENDATION

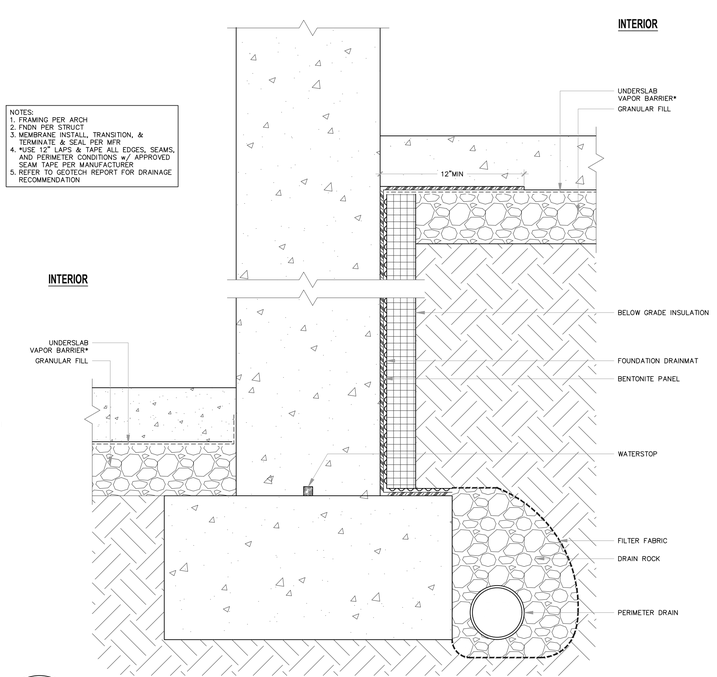

11 BE100 — SECTION: INTERIOR FOOTING STEP

SCALE: NTS

© COPYRIGHT BEE ENGINEERS

NOTES:
1. FRAMING PER ARCH

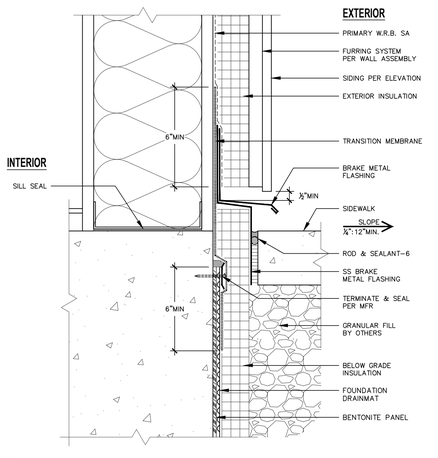

12 BE100 — SECTION: BASE OF WALL AT SIDEWALK

SCALE: NTS

© COPYRIGHT BEE ENGINEERS

BEE ENGINEERS
170 W DAYTON ST, SUITE 206
EDMONDS, WA 98020
PH: 425.672-3900
FAX: 425.712-8608

PATRICK McMAHON — STATE OF WASHINGTON — 24025265 — REGISTERED PROFESSIONAL ENGINEER

BARNABIE POINT PROJECT

3700 E Mercer Way
Mercer Island, WA 98040

	DATE	DESCRIPTION
	01.02.2025	DESIGN DEVELOPMENT
	06.04.2025	BUILDING PERMIT
	08.20.2025	COORDINATION SET
	10.22.2025	BP CORRECTIONS
	12.15.2025	100% CD SET

PHASE:

4 JUNE 2025
BUILDING PERMIT

BEE PROJECT #: 2403-1017

P.E.:	Patrick McMahon
P.M.:	Patrick McMahon
ENERGY:	Katya Bautista
DRAFTER:	Denin Dazey

© COPYRIGHT BEE ENGINEERS

THESE DRAWINGS ARE FOR GENERAL ARRANGEMENT OF MATERIALS ON SITE CONDITIONS GOVERN. DO NOT SCALE DRAWINGS TO OBTAIN DIMENSIONS.

SHEET NAME:

BELOW GRADE DETAILS

SHEET NUMBER:

BE100

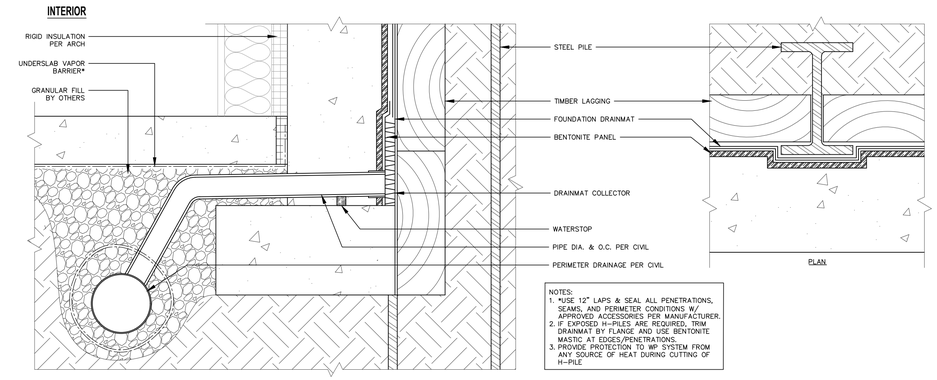

1 BE101 SECTION: BASE OF SHORING AT TIMBER LAG

SCALE: NTS

© COPYRIGHT BEE ENGINEERS

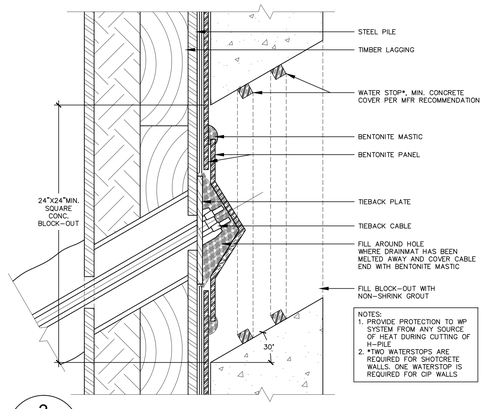

3 BE101 SECTION: TIE-BACK COVER @ LAGGING

SCALE: NTS

© COPYRIGHT BEE ENGINEERS

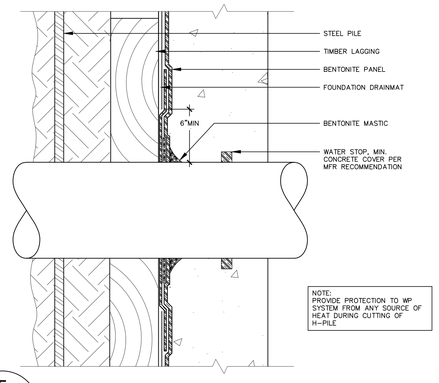

5 BE101 SECTION: PRE-POUR - PIPE THROUGH FNDN @ SHORING WALL

SCALE: NTS

© COPYRIGHT BEE ENGINEERS

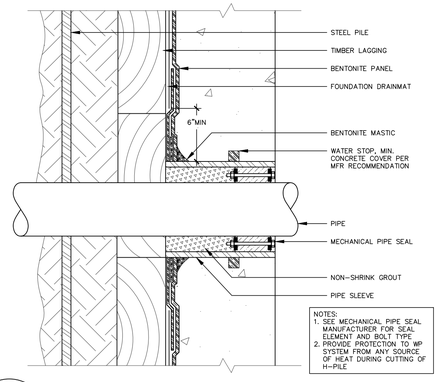

6 BE101 SECTION: PRE-POUR - SLEEVED PIPE THROUGH FOUNDATION @ SHORING WALL

SCALE: NTS

© COPYRIGHT BEE ENGINEERS

BEE ENGINEERS
170 W DAYTON ST, SUITE 206
EDMONDS, WA 98020
PH: 425 672-3900
FAX: 425 712-8608

PATRICK McMAHON
STATE OF WASHINGTON
34029365
REGISTERED PROFESSIONAL ENGINEER

BARNABIE POINT PROJECT

3700 E Mercer Way
Mercer Island, WA 98040

DATE	DESCRIPTION
01.02.2025	DESIGN DEVELOPMENT
06.04.2025	BUILDING PERMIT
08.20.2025	COORDINATION SET
10.22.2025	BP CORRECTIONS
12.15.2025	100% CD SET

PHASE:

4 JUNE 2025
BUILDING PERMIT

BEE PROJECT #: 2403-1017

P.E.: Patrick McMahon
P.M.: Patrick McMahon
ENERGY: Katya Bautista
DRAFTER: Denin Dazey

© COPYRIGHT BEE ENGINEERS

THESE DRAWINGS ARE FOR GENERAL ARRANGEMENT OF MATERIALS ON SITE CONDITIONS GOVERN. DO NOT SCALE DRAWINGS TO OBTAIN DIMENSIONS.

SHEET NAME:

BELOW GRADE DETAILS

SHEET NUMBER:

BE101

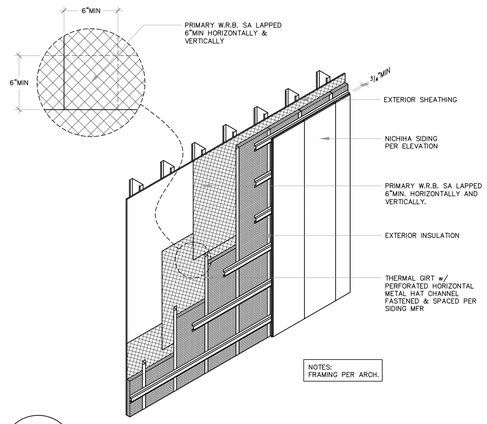

1 BE200 WALL ASSEMBLY: NICHIHA SIDING w/ EXTERIOR INSULATION

SCALE: NTS

© COPYRIGHT BEE ENGINEERS

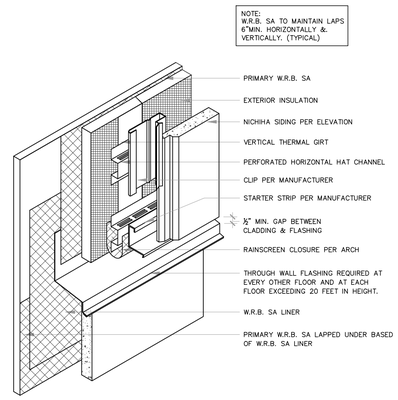

2 BE200 ASSEMBLY: THROUGH WALL FLASHING AT NICHIHA SIDING W/ EXTERIOR INSULATION

SCALE: NTS

© COPYRIGHT BEE ENGINEERS

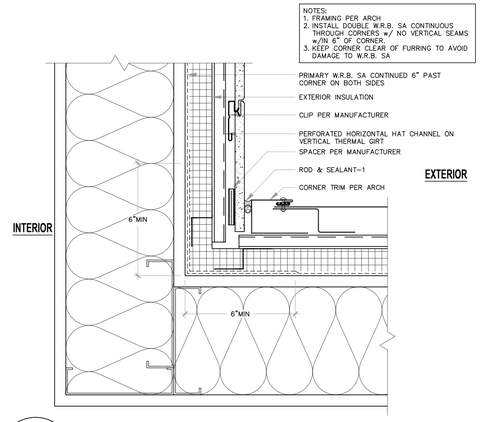

3 BE200 PLAN: INSIDE CORNER AT NICHIHA SIDING TO METAL SIDING

SCALE: NTS

© COPYRIGHT BEE ENGINEERS

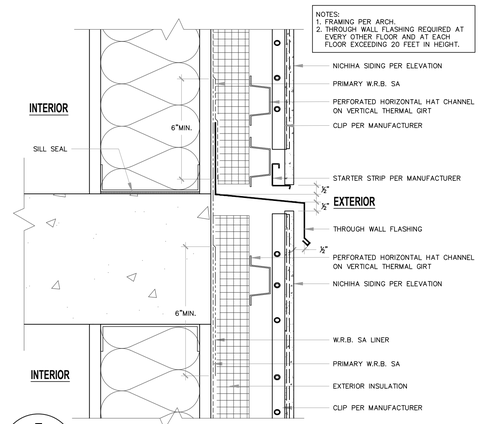

5 BE200 SECTION: THROUGH WALL FLASHING AT NICHIHA SIDING w/ EXTERIOR INSULATION @ CONCRETE

SCALE: NTS

© COPYRIGHT BEE ENGINEERS

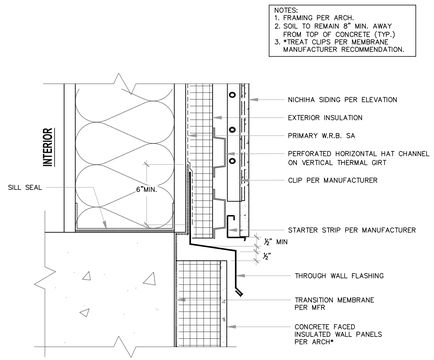

6 BE200 SECTION: BASE OF WALL @ NICHIHA SIDING W/ EXTERIOR INSULATION

SCALE: NTS

© COPYRIGHT BEE ENGINEERS

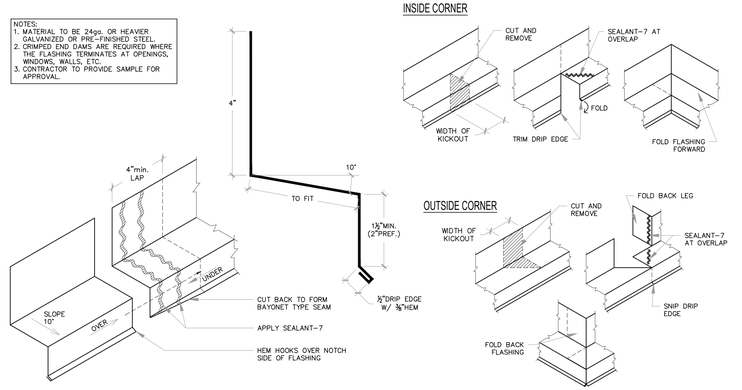

7 BE200 PROFILE: THROUGH WALL FLASHING

SCALE: NTS

© COPYRIGHT BEE ENGINEERS

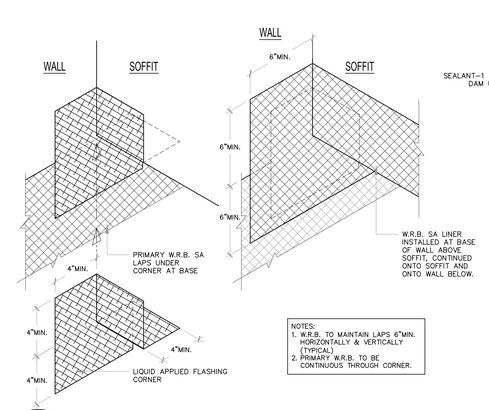

9 BE200 ASSEMBLY: SOFFIT CORNER TO WALL

SCALE: NTS

© COPYRIGHT BEE ENGINEERS

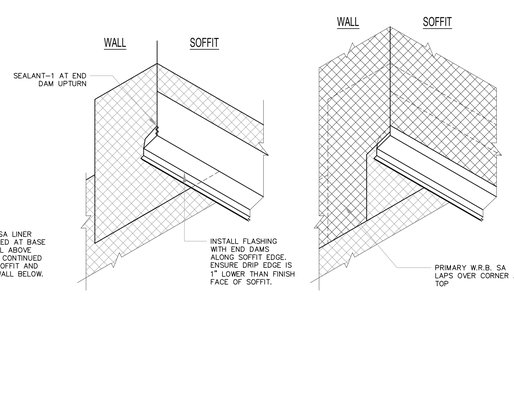

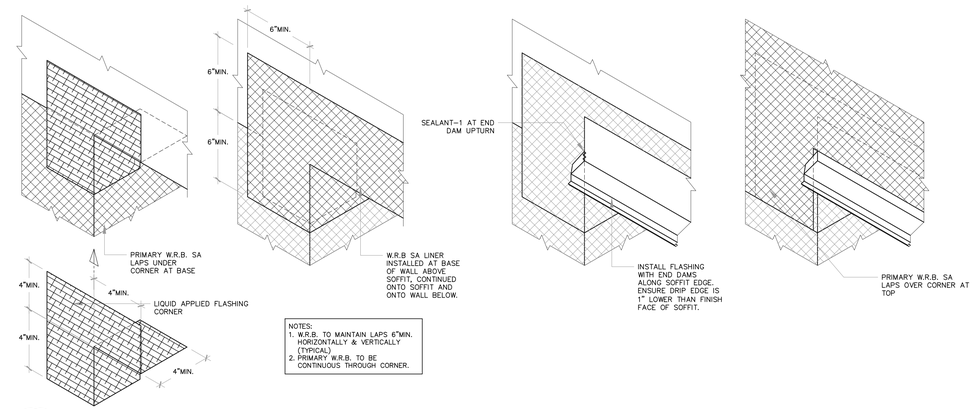

11 BE200 ASSEMBLY: SOFFIT CORNER TO FLAT WALL

SCALE: NTS

© COPYRIGHT BEE ENGINEERS

BEE ENGINEERS
170 W DAYTON ST, SUITE 206
EDMONDS, WA 98020
PH: 425 672-3900
FAX: 425 712-8608

PATRICK McMAHON
STATE OF WASHINGTON
24025265
REGISTERED
PROFESSIONAL ENGINEER

BARNABIE POINT PROJECT

3700 E Mercer Way
Mercer Island, WA 98040

	DATE	DESCRIPTION
	01.02.2025	DESIGN DEVELOPMENT
	06.04.2025	BUILDING PERMIT
	08.20.2025	COORDINATION SET
	10.22.2025	BP CORRECTIONS
	12.15.2025	100% CD SET

PHASE:

4 JUNE 2025

BUILDING PERMIT

BEE PROJECT #: 2403-1017

P.E.:	Patrick McMahon
P.M.:	Patrick McMahon
ENERGY:	Katya Bautista
DRAFTER:	Denin Dazey

© COPYRIGHT BEE ENGINEERS

THESE DRAWINGS ARE FOR GENERAL ARRANGEMENT OF MATERIALS ON SITE CONDITIONS GOVERN. DO NOT SCALE DRAWINGS TO OBTAIN DIMENSIONS.

SHEET NAME:

WALL DETAILS

SHEET NUMBER:

BE200

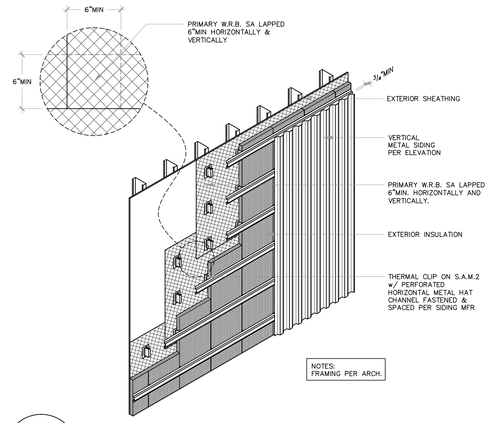

1 BE201 — WALL ASSEMBLY: VERTICAL METAL SIDING w/ EXTERIOR INSULATION

SCALE: NTS

© COPYRIGHT BEE ENGINEERS

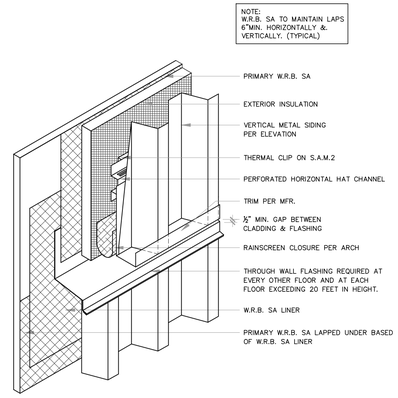

2 BE201 — ASSEMBLY: THROUGH WALL FLASHING AT VERTICAL SIDING W/ EXTERIOR INSULATION

SCALE: NTS

© COPYRIGHT BEE ENGINEERS

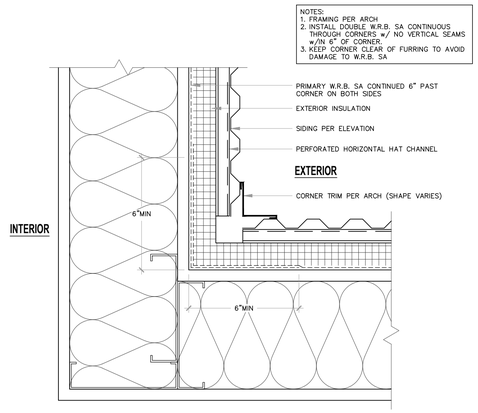

3 BE201 — PLAN: INSIDE CORNER AT VERTICAL METAL SIDING w/ EXTERIOR INSULATION

SCALE: NTS

© COPYRIGHT BEE ENGINEERS

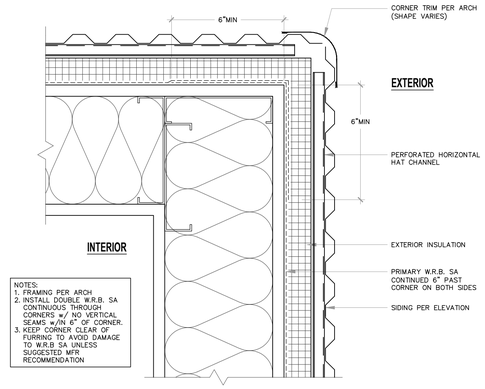

4 BE201 REF.ARCH C2/A-506 — PLAN: OUTSIDE CORNER AT VERTICAL METAL SIDING w/ EXTERIOR INSULATION

SCALE: NTS

© COPYRIGHT BEE ENGINEERS

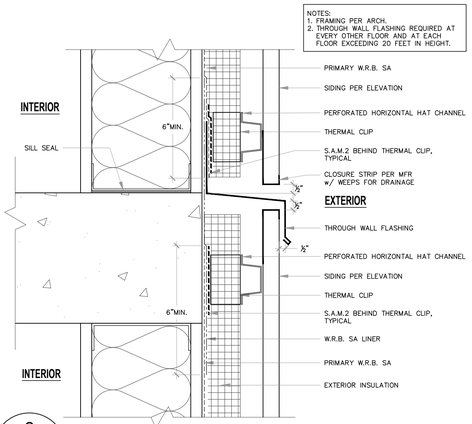

6 BE201 — SECTION: THROUGH WALL FLASHING AT VERTICAL SIDING w/ EXTERIOR INSULATION @ CONCRETE

SCALE: NTS

© COPYRIGHT BEE ENGINEERS

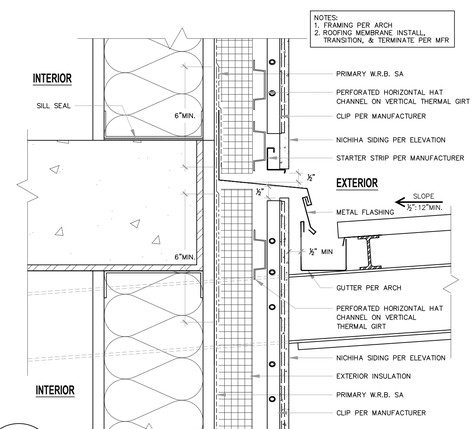

9 BE201 REF.ARCH C1/A-505 — SECTION: ROOF EDGE @ CANOPY

SCALE: NTS

© COPYRIGHT BEE ENGINEERS

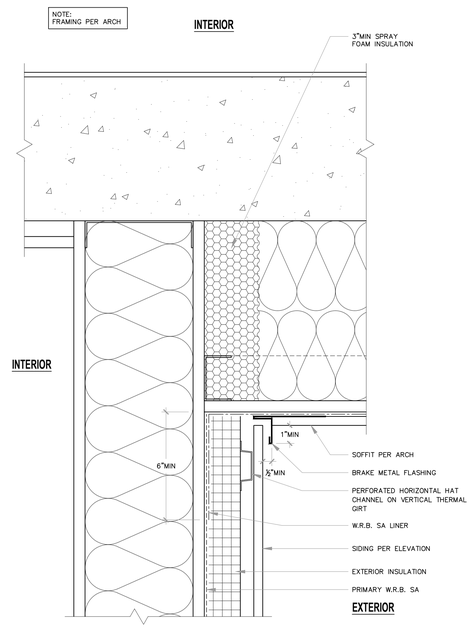

11 BE201 REF.ARCH A1/A-504 — SECTION: INNER SOFFIT AT SLAB w/ SIDING & EXTERIOR INSULATION

SCALE: NTS

© COPYRIGHT BEE ENGINEERS

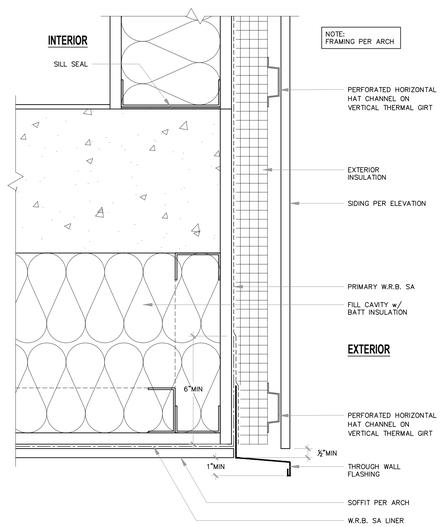

12 BE201 REF.ARCH A1/A-504 — SECTION: OUTER SOFFIT AT SLAB EDGE & SIDING w/ EXTERIOR INSULATION

SCALE: NTS

© COPYRIGHT BEE ENGINEERS

BEE ENGINEERS
170 W DAYTON ST, SUITE 206
EDMONDS, WA 98020
PH: 425 672-3900
FAX: 425 712-8608

PATRICK McMAHON — STATE OF WASHINGTON — 19929 — REGISTERED PROFESSIONAL ENGINEER

BARNABIE POINT PROJECT

3700 E Mercer Way
Mercer Island, WA 98040

	DATE	DESCRIPTION
	01.02.2025	DESIGN DEVELOPMENT
	06.04.2025	BUILDING PERMIT
	08.20.2025	COORDINATION SET
	10.22.2025	BP CORRECTIONS
	12.15.2025	100% CD SET

PHASE:

4 JUNE 2025
BUILDING PERMIT

BEE PROJECT #: 2403-1017

P.E.:	Patrick McMahon
P.M.:	Patrick McMahon
ENERGY:	Katya Bautista
DRAFTER:	Denin Dazey

© COPYRIGHT BEE ENGINEERS

THESE DRAWINGS ARE FOR GENERAL ARRANGEMENT OF MATERIALS ON SITE CONDITIONS GOVERN. DO NOT SCALE DRAWINGS TO OBTAIN DIMENSIONS.

SHEET NAME:

WALL DETAILS

SHEET NUMBER:

BE201

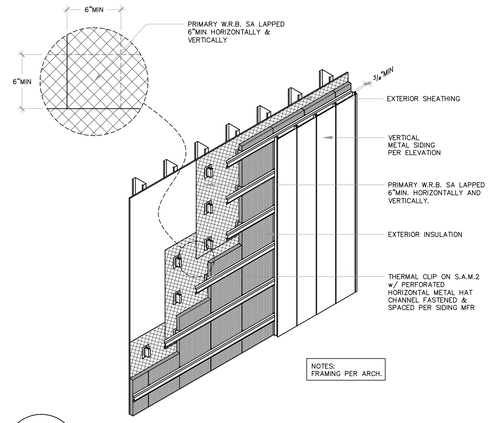

1 BE202

WALL ASSEMBLY: VERTICAL METAL SIDING w/ EXTERIOR INSULATION

SCALE: NTS

© COPYRIGHT BEE ENGINEERS

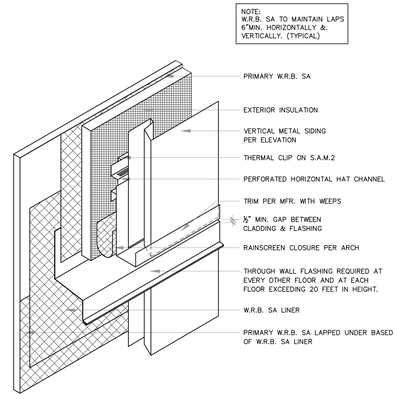

2 BE202

ASSEMBLY: THROUGH WALL FLASHING AT VERTICAL SIDING W/ EXTERIOR INSULATION

SCALE: NTS

© COPYRIGHT BEE ENGINEERS

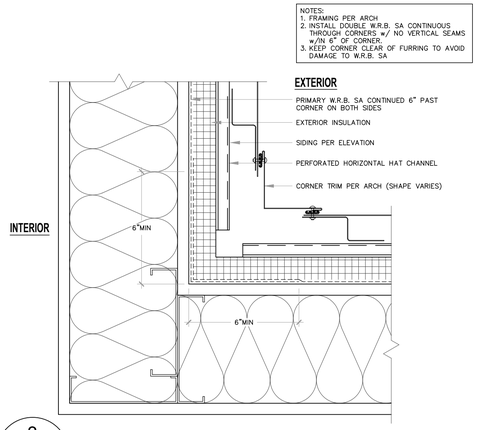

3 BE202

PLAN: INSIDE CORNER AT VERTICAL METAL SIDING w/ EXTERIOR INSULATION

SCALE: NTS

© COPYRIGHT BEE ENGINEERS

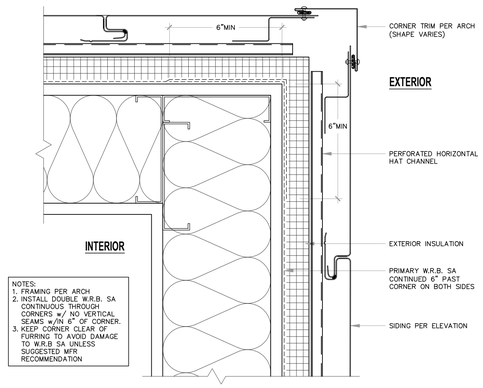

4 BE202 REF.ARCH C1/A-506

PLAN: OUTSIDE CORNER AT VERTICAL METAL SIDING w/ EXTERIOR INSULATION

SCALE: NTS

© COPYRIGHT BEE ENGINEERS

7 BE202 REF.ARCH C2/A-506

PLAN: INSIDE CORNER AT VERTICAL METAL SIDING TRANSITION

SCALE: NTS

© COPYRIGHT BEE ENGINEERS

BEE ENGINEERS
170 W DAYTON ST, SUITE 206
EDMONDS, WA 98020
PH: 425 672-3900
FAX: 425 712-8608

PATRICK McMAHON — STATE OF WASHINGTON — 24029085 — REGISTERED PROFESSIONAL ENGINEER

BARNABIE POINT PROJECT

3700 E Mercer Way
Mercer Island, WA 98040

	DATE	DESCRIPTION
	01.02.2025	DESIGN DEVELOPMENT
	06.04.2025	BUILDING PERMIT
	08.20.2025	COORDINATION SET
	10.22.2025	BP CORRECTIONS
	12.15.2025	100% CD SET

PHASE:

4 JUNE 2025
BUILDING PERMIT

BEE PROJECT #: 2403-1017

P.E.: Patrick McMahon
P.M.: Patrick McMahon
ENERGY: Katya Bautista
DRAFTER: Denin Dazey

© COPYRIGHT BEE ENGINEERS

THESE DRAWINGS ARE FOR GENERAL ARRANGEMENT OF MATERIALS ON SITE CONDITIONS GOVERN. DO NOT SCALE DRAWINGS TO OBTAIN DIMENSIONS.

SHEET NAME:

WALL DETAILS

SHEET NUMBER:

BE202

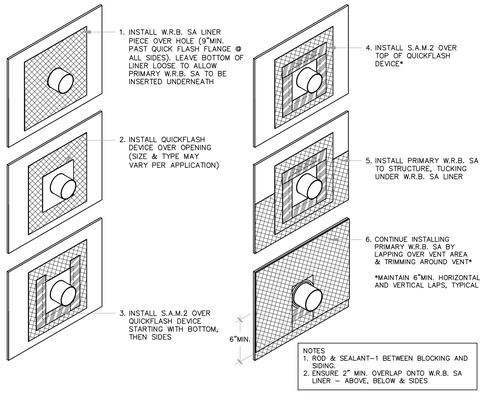

1 BE300 ASSEMBLY: 3" TO 8" PIPE PENETRATION

SCALE: NTS

© COPYRIGHT BEE ENGINEERS

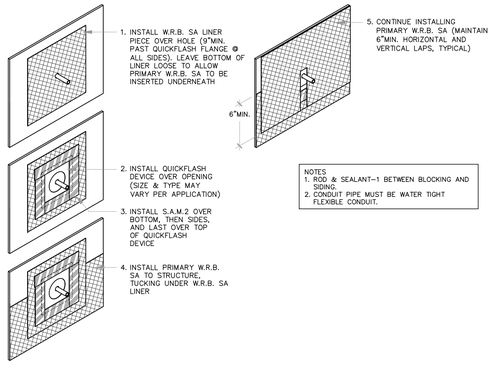

2 BE300 ASSEMBLY: CONDUIT PIPE PENETRATION

SCALE: NTS

© COPYRIGHT BEE ENGINEERS

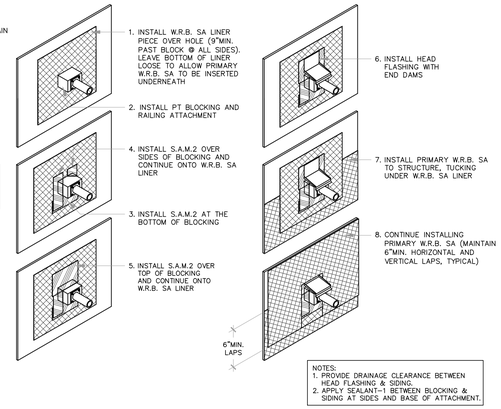

3 BE300 ASSEMBLY: RAILING ATTACHMENT

SCALE: NTS

© COPYRIGHT BEE ENGINEERS

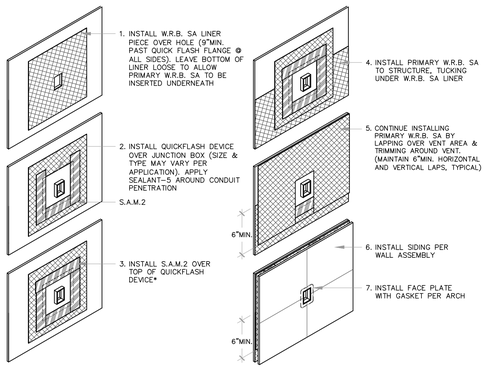

5 BE300 ASSEMBLY: ELECT. WALL OUTLETS (ALARM PULL SIMILAR)

SCALE: NTS

© COPYRIGHT BEE ENGINEERS

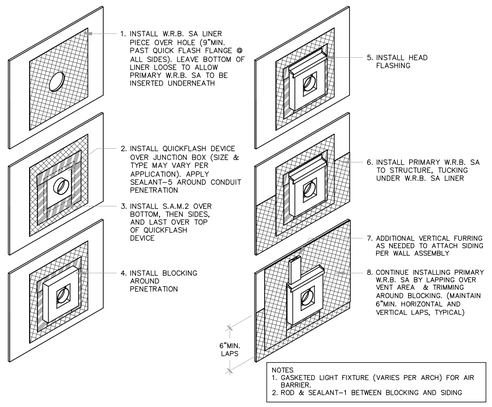

6 BE300 ASSEMBLY: ELECTRICAL WALL MOUNTED LIGHT

SCALE: NTS

© COPYRIGHT BEE ENGINEERS

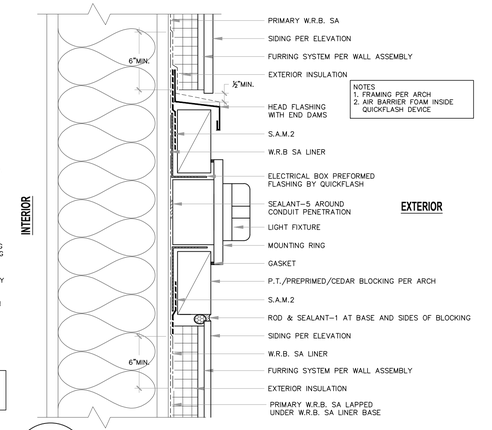

7 BE300 SECTION: ELECTRICAL WALL MOUNTED LIGHT

SCALE: NTS

© COPYRIGHT BEE ENGINEERS

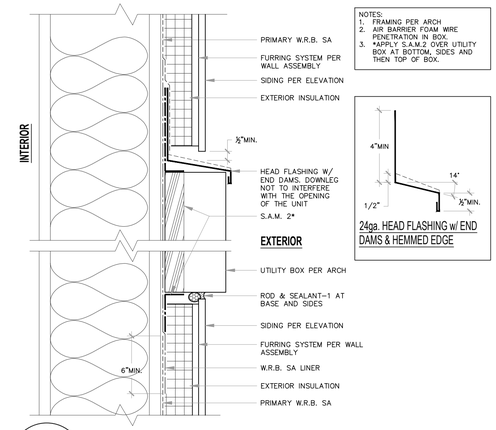

8 BE300 SECTION: UTILITY BOX

SCALE: NTS

© COPYRIGHT BEE ENGINEERS

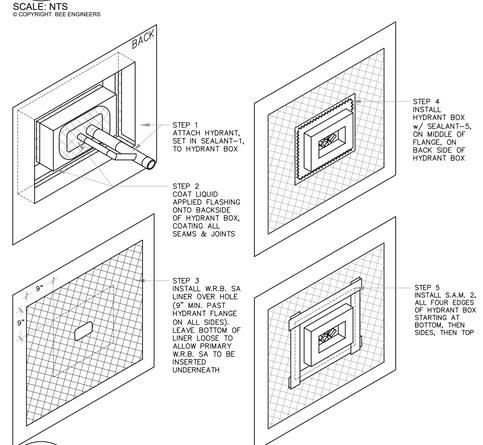

9 BE300 ASSEMBLY: HYDRANT

SCALE: NTS

© COPYRIGHT BEE ENGINEERS

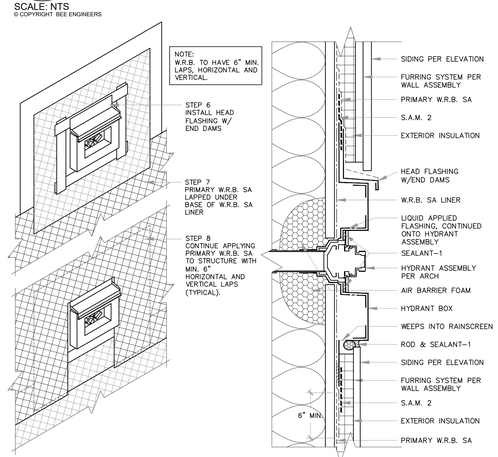

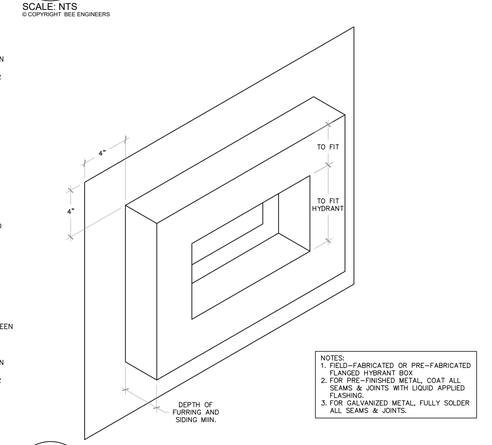

11 BE300 ISOMETRIC: FLANGED HYDRANT BOX

SCALE: NTS

© COPYRIGHT BEE ENGINEERS

BEE ENGINEERS
170 W DAYTON ST, SUITE 206
EDMONDS, WA 98020
PH: 425 672-3900
FAX: 425 712-8608

PATRICK McMAHON — STATE OF WASHINGTON — 19029 — REGISTERED PROFESSIONAL ENGINEER

BARNABIE POINT PROJECT

3700 E Mercer Way
Mercer Island, WA 98040

	DATE	DESCRIPTION
	01.02.2025	DESIGN DEVELOPMENT
	06.04.2025	BUILDING PERMIT
	08.20.2025	COORDINATION SET
	10.22.2025	BP CORRECTIONS
	12.15.2025	100% CD SET

PHASE:

4 JUNE 2025

BUILDING PERMIT

BEE PROJECT #: 2403-1017

P.E.:	Patrick McMahon
P.M.:	Patrick McMahon
ENERGY:	Katya Bautista
DRAFTER:	Denin Dazey

© COPYRIGHT BEE ENGINEERS

THESE DRAWINGS ARE FOR GENERAL ARRANGEMENT OF MATERIALS ON SITE CONDITIONS GOVERN. DO NOT SCALE DRAWINGS TO OBTAIN DIMENSIONS.

SHEET NAME:

PENETRATION DETAILS

SHEET NUMBER:

BE300

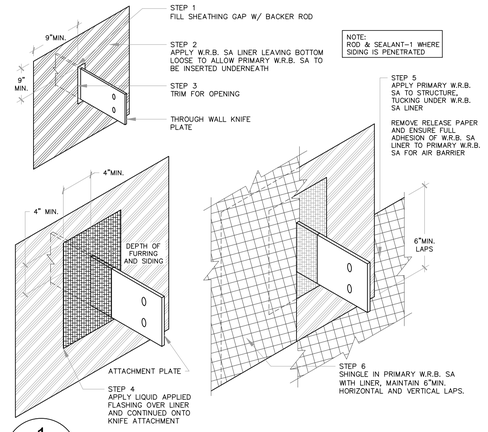

1 BE301 ASSEMBLY: THROUGH WALL KNIFE PLATE

SCALE: NTS

© COPYRIGHT BEE ENGINEERS

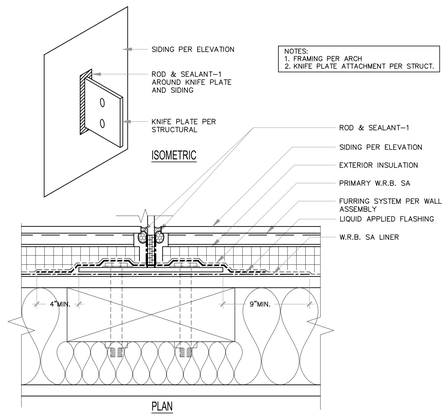

2 BE301 PLAN: FLANGED KNIFE PLATE

SCALE: NTS

© COPYRIGHT BEE ENGINEERS

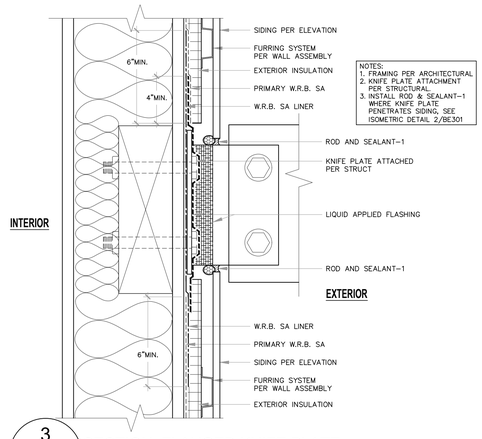

3 BE301 SECTION: FLANGED KNIFE PLATE

SCALE: NTS

© COPYRIGHT BEE ENGINEERS

BEE ENGINEERS
170 W DAYTON ST, SUITE 206
EDMONDS, WA 98020
PH: 425 672-3900
FAX: 425 712-8608

PATRICK McMAHON
STATE OF WASHINGTON
24029365
REGISTERED
PROFESSIONAL ENGINEER

BARNABIE POINT PROJECT

3700 E Mercer Way
Mercer Island, WA 98040

DATE	DESCRIPTION
01.02.2025	DESIGN DEVELOPMENT
06.04.2025	BUILDING PERMIT
08.20.2025	COORDINATION SET
10.22.2025	BP CORRECTIONS
12.15.2025	100% CD SET

PHASE:

4 JUNE 2025
BUILDING PERMIT

BEE PROJECT #: 2403-1017

P.E.: Patrick McMahon
P.M.: Patrick McMahon
ENERGY: Katya Bautista
DRAFTER: Denin Dazey

© COPYRIGHT BEE ENGINEERS

THESE DRAWINGS ARE FOR GENERAL ARRANGEMENT OF MATERIALS ON SITE CONDITIONS GOVERN. DO NOT SCALE DRAWINGS TO OBTAIN DIMENSIONS.

SHEET NAME:

PENETRATION DETAILS

SHEET NUMBER:

BE301

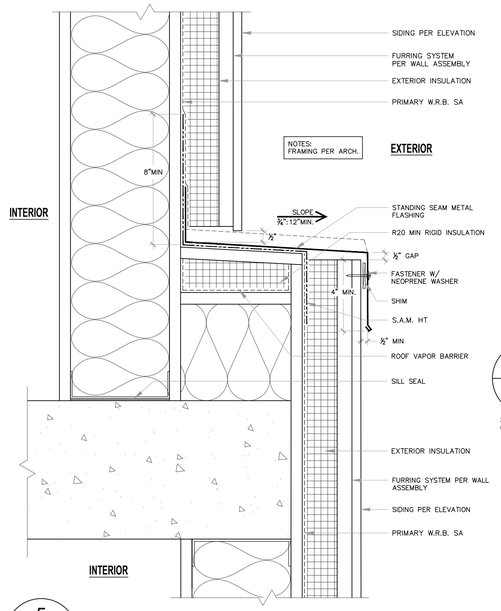

5
BE400
REF.ARCH B1/A-504
SCALE: NTS
© COPYRIGHT BEE ENGINEERS

SECTION: OFFSET SLAB EDGE AT L03

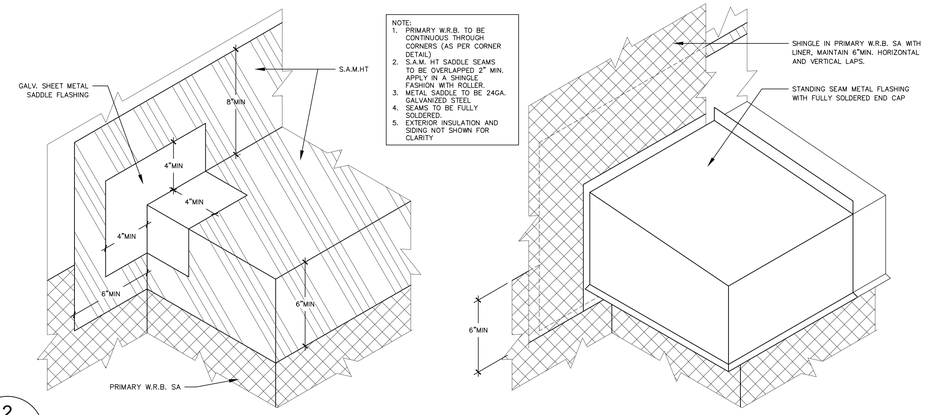

NOTE:
1. PRIMARY W.R.B. TO BE CONTINUOUS THROUGH CORNERS (AS PER CORNER DETAIL)
2. S.A.M. HT SADDLE SEAMS TO BE OVERLAPPED 2" MIN. APPLY IN A SHINGLE FASHION WITH ROLLER.
3. METAL SADDLE TO BE 24GA. GALVANIZED STEEL
4. SEAMS TO BE FULLY SOLDERED.
5. EXTERIOR INSULATION AND SIDING NOT SHOWN FOR CLARITY

2
BE400
REF.ARCH A-507
SCALE: NTS
© COPYRIGHT BEE ENGINEERS

ASSEMBLY: SADDLE FLASHING AT OFFSET SLAB EDGE

BEE ENGINEERS
170 W DAYTON ST, SUITE 206
EDMONDS, WA 98020
PH: 425 672-3900
FAX: 425 712-8608

PATRICK McMAHON
STATE OF WASHINGTON
34029365
REGISTERED PROFESSIONAL ENGINEER

BARNABIE POINT PROJECT
3700 E Mercer Way
Mercer Island, WA 98040

DATE	DESCRIPTION
01.02.2025	DESIGN DEVELOPMENT
06.04.2025	BUILDING PERMIT
08.20.2025	COORDINATION SET
10.22.2025	BP CORRECTIONS
12.15.2025	100% CD SET

PHASE:

4 JUNE 2025
BUILDING PERMIT

BEE PROJECT #: 2403-1017

P.E.: Patrick McMahon
P.M.: Patrick McMahon
ENERGY: Katya Bautista
DRAFTER: Denin Dazey

© COPYRIGHT BEE ENGINEERS

THESE DRAWINGS ARE FOR GENERAL ARRANGEMENT OF MATERIALS ON SITE CONDITIONS GOVERN. DO NOT SCALE DRAWINGS TO OBTAIN DIMENSIONS.

SHEET NAME:

DECK & ABOVE GRADE DETAILS

SHEET NUMBER:

BE400

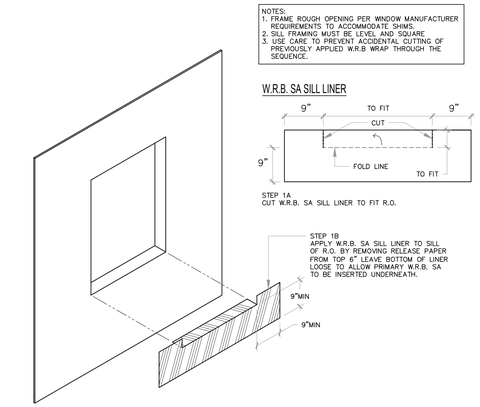

1 BE500 ASSEMBLY: FLANGED WINDOW w/ LIQUID SILL PAN (STEP 1)

SCALE: NTS

© COPYRIGHT BEE ENGINEERS

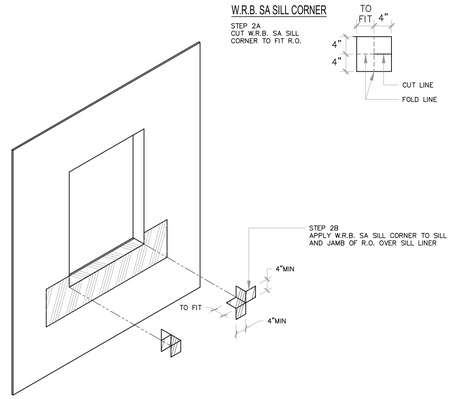

2 BE500 ASSEMBLY: FLANGED WINDOW w/ LIQUID SILL PAN (STEP 2)

SCALE: NTS

© COPYRIGHT BEE ENGINEERS

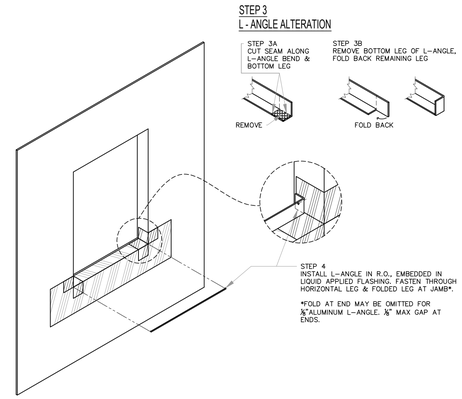

3 BE500 ASSEMBLY: FLANGED WINDOW w/ LIQUID SILL PAN (STEPS 3 & 4)

SCALE: NTS

© COPYRIGHT BEE ENGINEERS

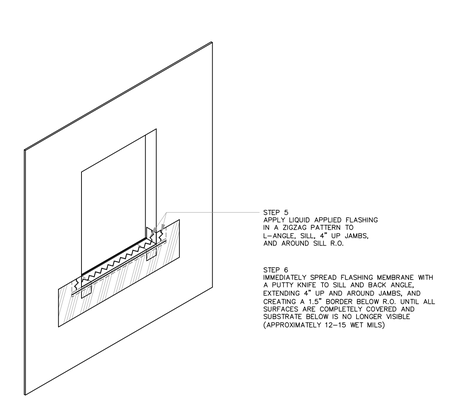

4 BE500 ASSEMBLY: FLANGED WINDOW w/ LIQUID SILL PAN (STEPS 5 & 6)

SCALE: NTS

© COPYRIGHT BEE ENGINEERS

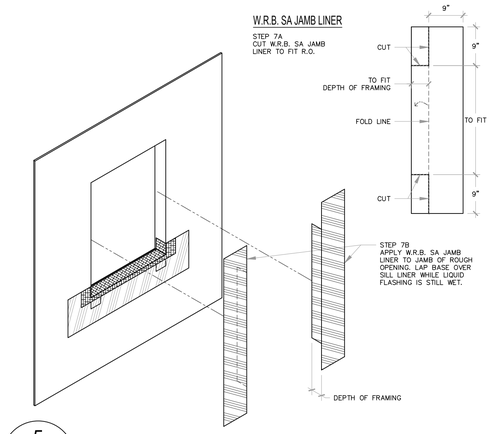

5 BE500 ASSEMBLY: FLANGED WINDOW w/ LIQUID SILL PAN (STEP 7)

SCALE: NTS

© COPYRIGHT BEE ENGINEERS

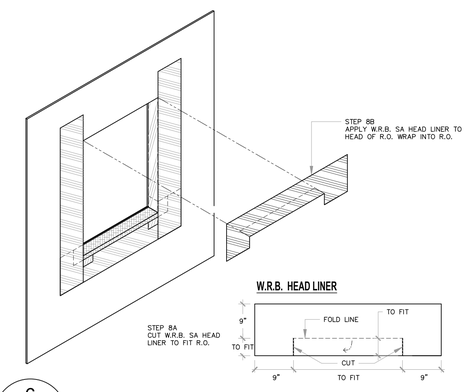

6 BE500 ASSEMBLY: FLANGED WINDOW w/ LIQUID SILL PAN (STEP 8)

SCALE: NTS

© COPYRIGHT BEE ENGINEERS

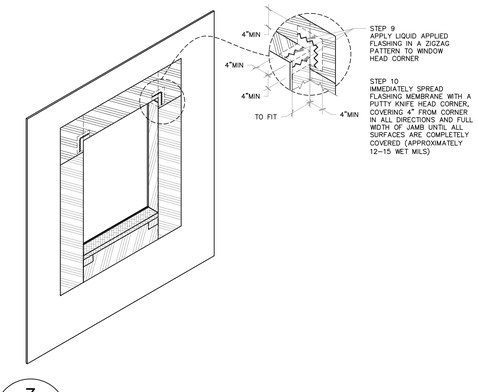

7 BE500 ASSEMBLY: FLANGED WINDOW w/ LIQUID SILL PAN (STEPS 9 & 10)

SCALE: NTS

© COPYRIGHT BEE ENGINEERS

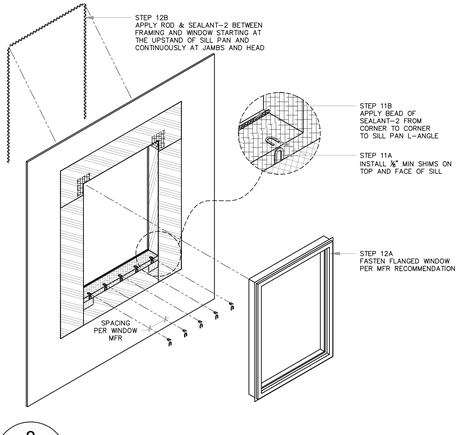

8 BE500 ASSEMBLY: FLANGED WINDOW w/ LIQUID SILL PAN (STEPS 11 & 12)

SCALE: NTS

© COPYRIGHT BEE ENGINEERS

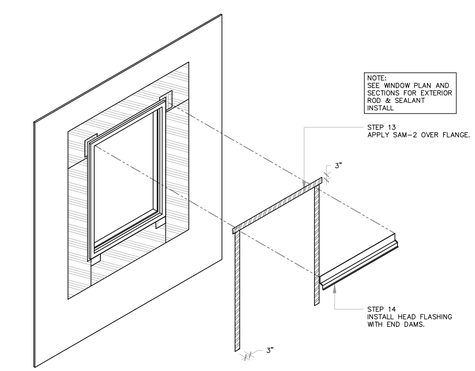

9 BE500 ASSEMBLY: FLANGED WINDOW w/ LIQUID SILL PAN (STEPS 13 & 14)

SCALE: NTS

© COPYRIGHT BEE ENGINEERS

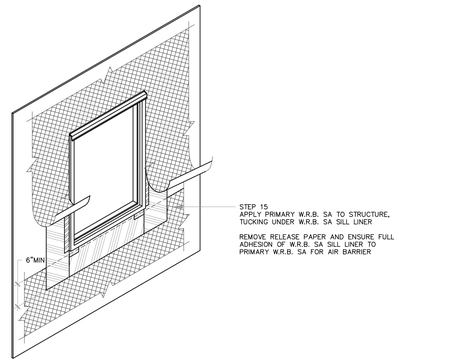

10 BE500 ASSEMBLY: FLANGED WINDOW w/ LIQUID SILL PAN (STEP 15)

SCALE: NTS

© COPYRIGHT BEE ENGINEERS

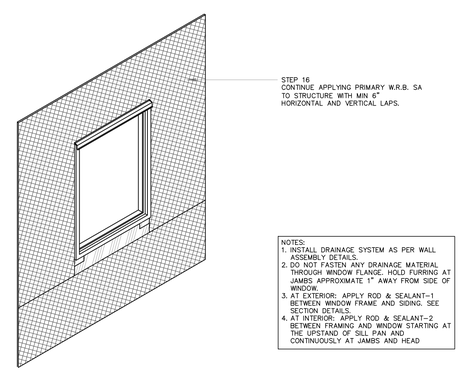

11 BE500 ASSEMBLY: FLANGED WINDOW w/ LIQUID SILL PAN (STEP 16)

SCALE: NTS

© COPYRIGHT BEE ENGINEERS

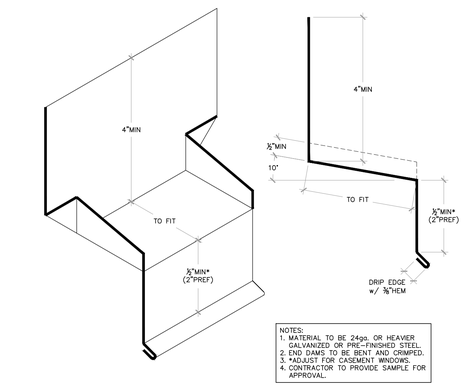

12 BE500 PROFILE: HEAD FLASHING w/ DOWNLEG

SCALE: NTS

© COPYRIGHT BEE ENGINEERS

BEE ENGINEERS
170 W DAYTON ST, SUITE 206
EDMONDS, WA 98020
PH: 425 672-3900
FAX: 425 712-8608

PATRICK McMAHON
STATE OF WASHINGTON
24929
REGISTERED
PROFESSIONAL ENGINEER

BARNABIE POINT PROJECT

3700 E Mercer Way
Mercer Island, WA 98040

	DATE	DESCRIPTION
	01.02.2025	DESIGN DEVELOPMENT
	06.04.2025	BUILDING PERMIT
	08.20.2025	COORDINATION SET
	10.22.2025	BP CORRECTIONS
	12.15.2025	100% CD SET

PHASE:

4 JUNE 2025
BUILDING PERMIT

BEE PROJECT #: 2403-1017

P.E.:	Patrick McMahon
P.M.:	Patrick McMahon
ENERGY:	Katya Bautista
DRAFTER:	Denin Dazey

© COPYRIGHT BEE ENGINEERS

THESE DRAWINGS ARE FOR GENERAL ARRANGEMENT OF MATERIALS ON SITE CONDITIONS GOVERN. DO NOT SCALE DRAWINGS TO OBTAIN DIMENSIONS.

SHEET NAME:

WINDOW & DOOR DETAILS

SHEET NUMBER:

BE500

BEE ENGINEERS
170 W DAYTON ST, SUITE 206
EDMONDS, WA 98020
PH: 425 672-3900
FAX: 425 712-8608

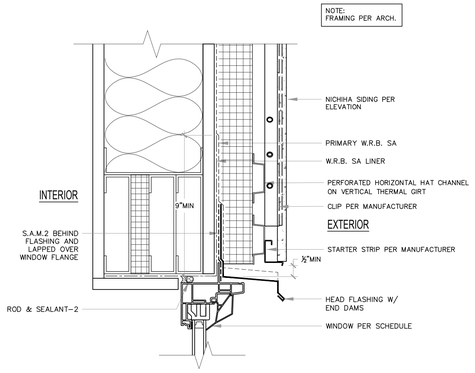

1 BE501 — SECTION: FLANGED WINDOW HEAD AT NICHIHA SIDING W/ EXTERIOR INSULATION

SCALE: NTS

© COPYRIGHT BEE ENGINEERS

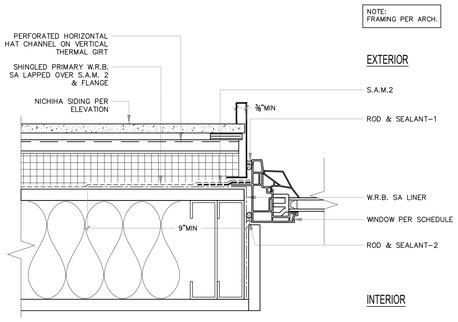

2 BE501 — PLAN: FLANGED WINDOW JAMB AT NICHIHA SIDING W/ EXTERIOR INSULATION

SCALE: NTS

© COPYRIGHT BEE ENGINEERS

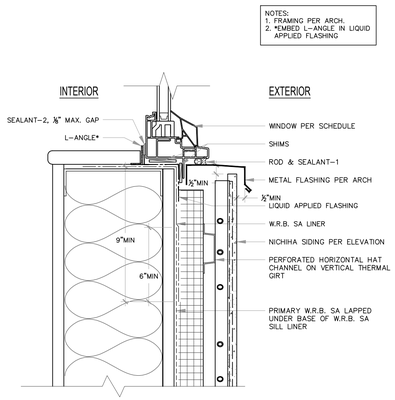

3 BE501 REF.ARCH B1/A-503 — SECTION: FLANGED WINDOW SILL AT NICHIHA SIDING W/ EXTERIOR INSULATION

SCALE: NTS

© COPYRIGHT BEE ENGINEERS

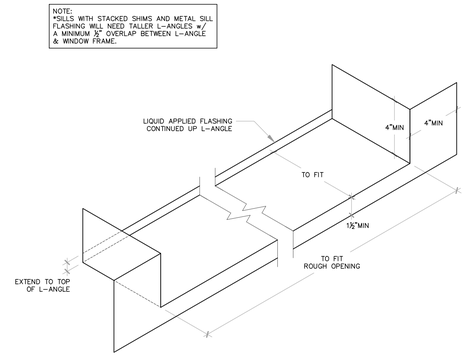

4 BE501 — ISOMETRIC: LIQUID SILL PAN

SCALE: NTS

© COPYRIGHT BEE ENGINEERS



5 BE501 REF.ARCH C1/A-503 — SECTION: FLANGED WINDOW HEAD AT VERTICAL METAL SIDING W/ EXTERIOR INSULATION

SCALE: NTS

© COPYRIGHT BEE ENGINEERS

6 BE501 REF.ARCH A1/A-503 — PLAN: FLANGED WINDOW JAMB AT VERTICAL METAL SIDING W/ EXTERIOR INSULATION

SCALE: NTS

© COPYRIGHT BEE ENGINEERS

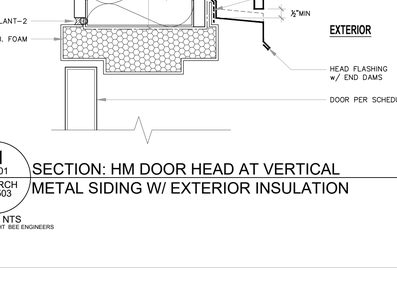

7 BE501 REF.ARCH B1/A-503 — SECTION: FLANGED WINDOW SILL AT VERTICAL METAL SIDING W/ EXTERIOR INSULATION

SCALE: NTS

© COPYRIGHT BEE ENGINEERS

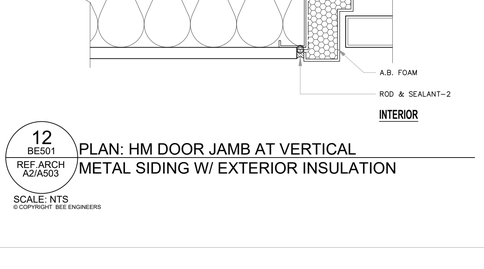

8 BE501 REF.ARCH B1/A-501 — SECTION: SWING DOOR THRESHOLD

SCALE: NTS

© COPYRIGHT BEE ENGINEERS

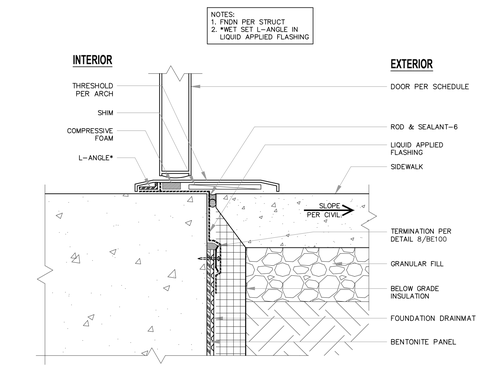

9 BE501 REF.ARCH B2/A-501 — SECTION: SWING DOOR THRESHOLD

SCALE: NTS

© COPYRIGHT BEE ENGINEERS

11 BE501 REF.ARCH B2/A503 — SECTION: HM DOOR HEAD AT VERTICAL METAL SIDING W/ EXTERIOR INSULATION

SCALE: NTS

© COPYRIGHT BEE ENGINEERS

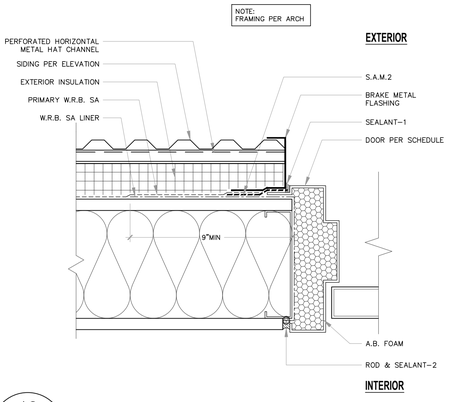

12 BE501 REF.ARCH A2/A503 — PLAN: HM DOOR JAMB AT VERTICAL METAL SIDING W/ EXTERIOR INSULATION

SCALE: NTS

© COPYRIGHT BEE ENGINEERS

BARNABIE POINT PROJECT

3700 E Mercer Way
Mercer Island, WA 98040

	DATE	DESCRIPTION
	01.02.2025	DESIGN DEVELOPMENT
	06.04.2025	BUILDING PERMIT
	08.20.2025	COORDINATION SET
	10.22.2025	BP CORRECTIONS
	12.15.2025	100% CD SET

PHASE:

4 JUNE 2025

BUILDING PERMIT

BEE PROJECT #: 2403-1017

P.E.:	Patrick McMahon
P.M.:	Patrick McMahon
ENERGY:	Katya Bautista
DRAFTER:	Denin Dazey

© COPYRIGHT BEE ENGINEERS

THESE DRAWINGS ARE FOR GENERAL ARRANGEMENT OF MATERIALS ON SITE CONDITIONS GOVERN. DO NOT SCALE DRAWINGS TO OBTAIN DIMENSIONS.

SHEET NAME:

WINDOW & DOOR DETAILS

SHEET NUMBER:

BE501

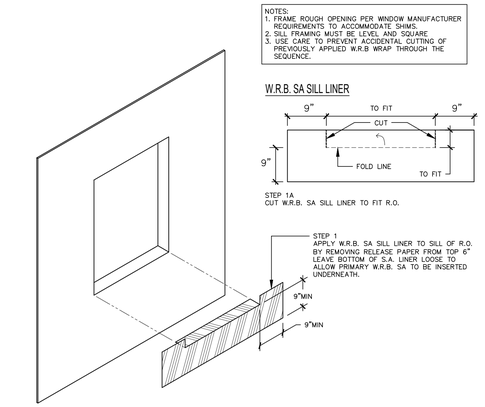

NOTES:
1. FRAME ROUGH OPENING PER WINDOW MANUFACTURER REQUIREMENTS TO ACCOMMODATE SHIMS.
2. SILL FRAMING MUST BE LEVEL AND SQUARE.
3. USE CARE TO PREVENT ACCIDENTAL CUTTING OF PREVIOUSLY APPLIED W.R.B WRAP THROUGH THE SEQUENCE.

W.R.B. SA SILL LINER

9" TO FIT 9"
CUT
FOLD LINE
9"
TO FIT

STEP 1A
CUT W.R.B. SA SILL LINER TO FIT R.O.

STEP 1
APPLY W.R.B. SA SILL LINER TO SILL OF R.O. BY REMOVING RELEASE PAPER FROM TOP 6" LEAVE BOTTOM OF S.A. LINER LOOSE TO ALLOW PRIMARY W.R.B. SA TO BE INSERTED UNDERNEATH.

9"MIN
9"MIN

1 BE502 ASSEMBLY: INSET STOREFRONT

SCALE: NTS
© COPYRIGHT BEE ENGINEERS

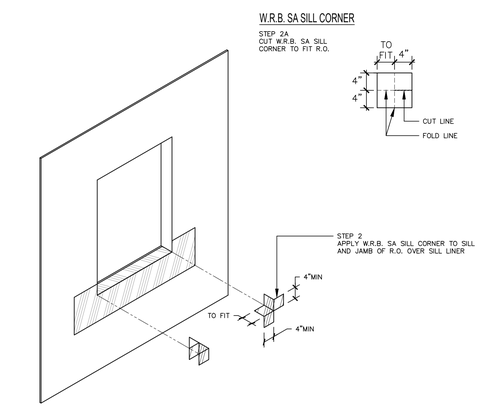

W.R.B. SA SILL CORNER

STEP 2A
CUT W.R.B. SA SILL CORNER TO FIT R.O.

TO FIT 4"
4"
4"
CUT LINE
FOLD LINE

STEP 2
APPLY W.R.B. SA SILL CORNER TO SILL AND JAMB OF R.O. OVER SILL LINER

4"MIN
TO FIT
4"MIN

2 BE502 ASSEMBLY: INSET STOREFRONT

SCALE: NTS
© COPYRIGHT BEE ENGINEERS

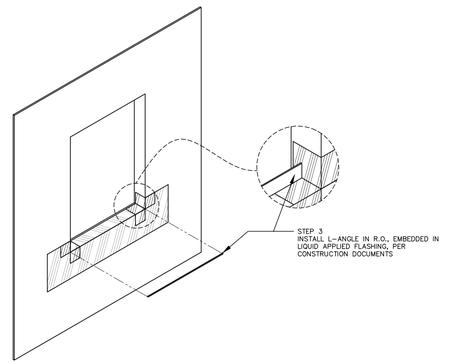

STEP 3
INSTALL L-ANGLE IN R.O., EMBEDDED IN LIQUID APPLIED FLASHING, PER CONSTRUCTION DOCUMENTS

3 BE502 ASSEMBLY: INSET STOREFRONT

SCALE: NTS
© COPYRIGHT BEE ENGINEERS

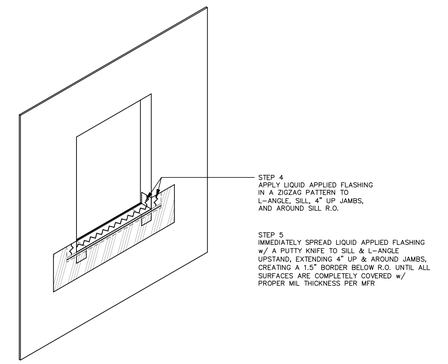

STEP 4
APPLY LIQUID APPLIED FLASHING IN A ZIGZAG PATTERN TO L-ANGLE, SILL, 4" UP JAMBS, AND AROUND SILL R.O.

STEP 5
IMMEDIATELY SPREAD LIQUID APPLIED FLASHING w/ A PUTTY KNIFE TO SILL & L-ANGLE UPSTAND, EXTENDING 4" UP & AROUND JAMBS, CREATING A 1.5" BORDER BELOW R.O. UNTIL ALL SURFACES ARE COMPLETELY COVERED w/ PROPER MIL THICKNESS PER MFR

4 BE502 ASSEMBLY: INSET STOREFRONT

SCALE: NTS
© COPYRIGHT BEE ENGINEERS

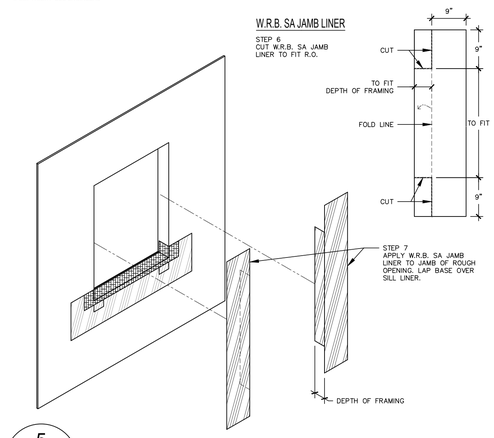

W.R.B. SA JAMB LINER

STEP 6
CUT W.R.B. SA JAMB LINER TO FIT R.O.

9"
CUT
TO FIT DEPTH OF FRAMING
FOLD LINE
TO FIT
CUT
9"

STEP 7
APPLY W.R.B. SA JAMB LINER TO JAMB OF ROUGH OPENING. LAP BASE OVER SILL LINER.

DEPTH OF FRAMING

5 BE502 ASSEMBLY: INSET STOREFRONT

SCALE: NTS
© COPYRIGHT BEE ENGINEERS

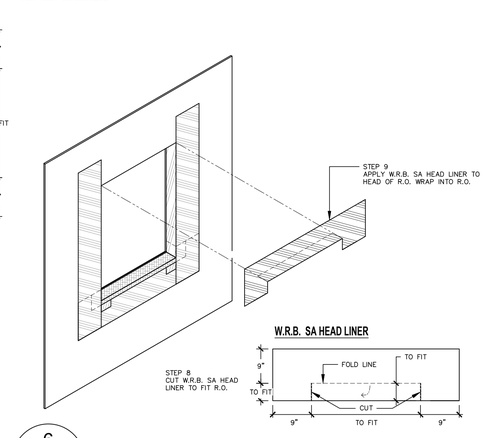

STEP 9
APPLY W.R.B. SA HEAD LINER TO HEAD OF R.O. WRAP INTO R.O.

W.R.B. SA HEAD LINER

STEP 8
CUT W.R.B. SA HEAD LINER TO FIT R.O.

9"
TO FIT
FOLD LINE
TO FIT
CUT
9" TO FIT 9"

6 BE502 ASSEMBLY: INSET STOREFRONT

SCALE: NTS
© COPYRIGHT BEE ENGINEERS

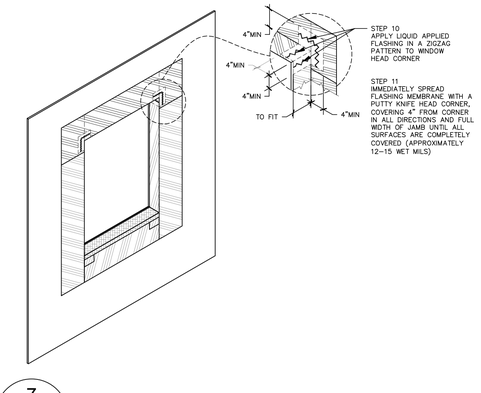

4"MIN
4"MIN
4"MIN
TO FIT
4"MIN

STEP 10
APPLY LIQUID APPLIED FLASHING IN A ZIGZAG PATTERN TO WINDOW HEAD CORNER

STEP 11
IMMEDIATELY SPREAD FLASHING MEMBRANE WITH A PUTTY KNIFE HEAD CORNER, COVERING 4" FROM CORNER IN ALL DIRECTIONS AND FULL WIDTH OF JAMB UNTIL ALL SURFACES ARE COMPLETELY COVERED (APPROXIMATELY 12-15 WET MILS)

7 BE502 ASSEMBLY: INSET STOREFRONT

SCALE: NTS
© COPYRIGHT BEE ENGINEERS

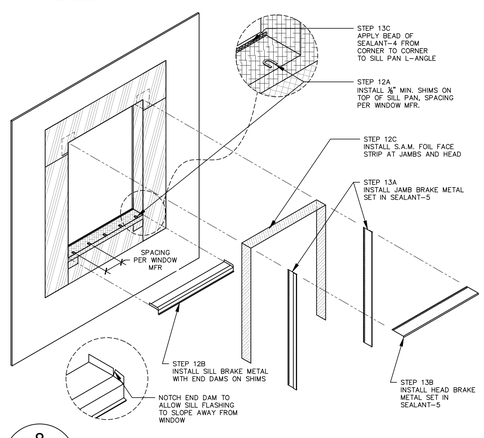

STEP 13C
APPLY BEAD OF SEALANT-4 FROM CORNER TO CORNER TO SILL PAN L-ANGLE

STEP 12A
INSTALL ¼" MIN. SHIMS ON TOP OF SILL PAN, SPACING PER WINDOW MFR.

STEP 12C
INSTALL S.A.M. FOIL FACE STRIP AT JAMBS AND HEAD

STEP 13A
INSTALL JAMB BRAKE METAL SET IN SEALANT-5

SPACING PER WINDOW MFR

STEP 13B
INSTALL SILL BRAKE METAL WITH END DAMS ON SHIMS

NOTCH END DAM TO ALLOW SILL FLASHING TO SLOPE AWAY FROM WINDOW

STEP 13B
INSTALL HEAD BRAKE METAL SET IN SEALANT-5

8 BE502 ASSEMBLY: INSET STOREFRONT

SCALE: NTS
© COPYRIGHT BEE ENGINEERS

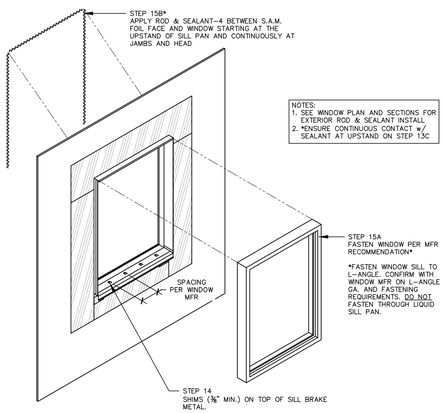

STEP 15B*
APPLY ROD & SEALANT-4 BETWEEN S.A.M. FOIL FACE AND WINDOW STARTING AT THE UPSTAND OF SILL PAN AND CONTINUOUSLY AT JAMBS AND HEAD

NOTES:
1. SEE WINDOW PLAN AND SECTIONS FOR EXTERIOR ROD & SEALANT INSTALL.
2. *ENSURE CONTINUOUS CONTACT w/ SEALANT AT UPSTAND ON STEP 13C

STEP 15A
FASTEN WINDOW PER MFR RECOMMENDATION*

*FASTEN WINDOW SILL TO L-ANGLE; CONFIRM WITH WINDOW MFR ON L-ANGLE GA. AND FASTENING REQUIREMENTS. DO NOT FASTEN THROUGH LIQUID SILL PAN.

SPACING PER WINDOW MFR.

STEP 14
SHIMS (⅛" MIN.) ON TOP OF SILL BRAKE METAL.

9 BE502 ASSEMBLY: INSET STOREFRONT

SCALE: NTS
© COPYRIGHT BEE ENGINEERS

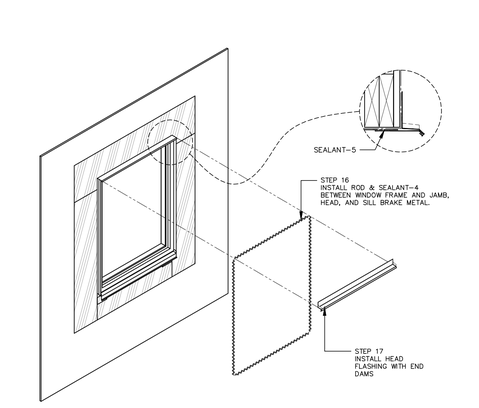

SEALANT-5

STEP 16
INSTALL ROD & SEALANT-4 BETWEEN WINDOW FRAME AND JAMB, HEAD, AND SILL BRAKE METAL.

STEP 17
INSTALL HEAD FLASHING WITH END DAMS

10 BE502 ASSEMBLY: INSET STOREFRONT

SCALE: NTS
© COPYRIGHT BEE ENGINEERS

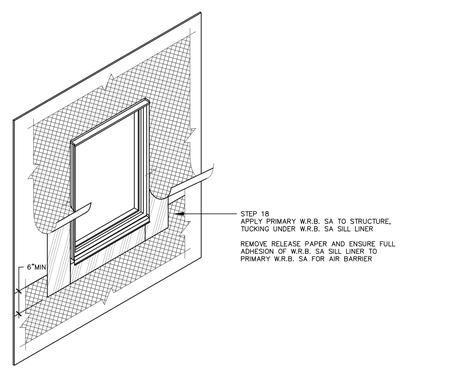

6"MIN

STEP 18
APPLY PRIMARY W.R.B. SA TO STRUCTURE, TUCKING UNDER W.R.B. SA SILL LINER

REMOVE RELEASE PAPER AND ENSURE FULL ADHESION OF W.R.B. SA SILL LINER TO PRIMARY W.R.B. SA FOR AIR BARRIER

11 BE502 ASSEMBLY: INSET STOREFRONT

SCALE: NTS
© COPYRIGHT BEE ENGINEERS

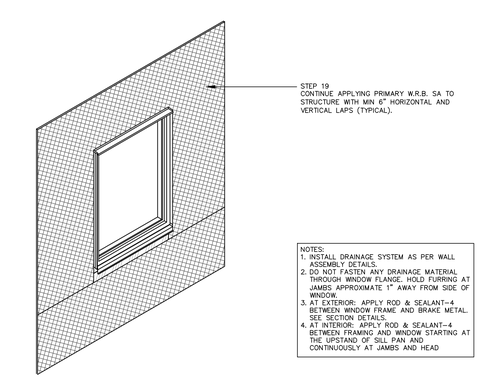

STEP 19
CONTINUE APPLYING PRIMARY W.R.B. SA TO STRUCTURE WITH MIN 6" HORIZONTAL AND VERTICAL LAPS (TYPICAL).

NOTES:
1. INSTALL DRAINAGE SYSTEM AS PER WALL ASSEMBLY DETAILS.
2. DO NOT FASTEN ANY DRAINAGE MATERIAL THROUGH WINDOW FLANGE. HOLD FURRING AT JAMBS APPROXIMATE 1" AWAY FROM SIDE OF WINDOW.
3. AT EXTERIOR: APPLY ROD & SEALANT-4 BETWEEN WINDOW FRAME AND BRAKE METAL. SEE SECTION DETAILS.
4. AT INTERIOR: APPLY ROD & SEALANT-4 BETWEEN FRAMING AND WINDOW STARTING AT THE UPSTAND OF SILL PAN AND CONTINUOUSLY AT JAMBS AND HEAD

12 BE502 ASSEMBLY: INSET STOREFRONT

SCALE: NTS
© COPYRIGHT BEE ENGINEERS

BEE ENGINEERS
170 W DAYTON ST, SUITE 206
EDMONDS, WA 98020
PH: 425 672-3900
FAX: 425 712-8608

PATRICK McMAHON
STATE OF WASHINGTON
24029265
REGISTERED
PROFESSIONAL ENGINEER

BARNABIE POINT PROJECT

3700 E Mercer Way
Mercer Island, WA 98040

	DATE	DESCRIPTION
	01.02.2025	DESIGN DEVELOPMENT
	06.04.2025	BUILDING PERMIT
	08.20.2025	COORDINATION SET
	10.22.2025	BP CORRECTIONS
	12.15.2025	100% CD SET

PHASE:

4 JUNE 2025
BUILDING PERMIT

BEE PROJECT #: 2403-1017

P.E.:	Patrick McMahon
P.M.:	Patrick McMahon
ENERGY:	Katya Bautista
DRAFTER:	Denin Dazey

© COPYRIGHT BEE ENGINEERS

THESE DRAWINGS ARE FOR GENERAL ARRANGEMENT OF MATERIALS ON SITE CONDITIONS GOVERN. DO NOT SCALE DRAWINGS TO OBTAIN DIMENSIONS.

SHEET NAME:

WINDOW & DOOR DETAILS

SHEET NUMBER:

BE502

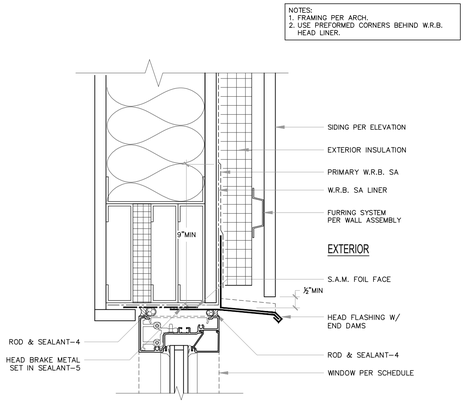

1 BE503 REF.ARCH C1/A-502 SECTION: STOREFRONT WINDOW HEAD INSET AT SIDING w/ EXTERIOR INSULATION

SCALE: NTS

© COPYRIGHT BEE ENGINEERS

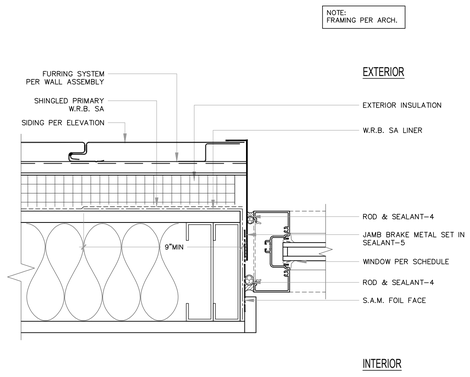

2 BE503 REF.ARCH A1/A-502 PLAN: STOREFRONT WINDOW JAMB INSET AT SIDING w/ EXTERIOR INSULATION

SCALE: NTS

© COPYRIGHT BEE ENGINEERS

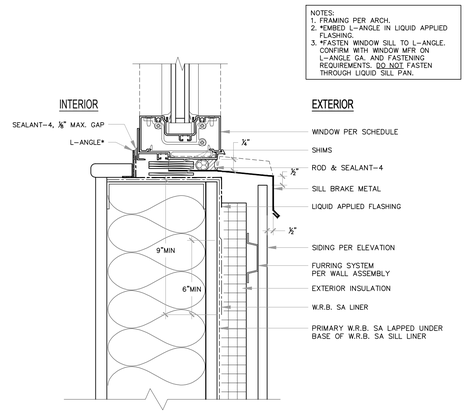

3 BE503 SECTION: STOREFRONT WINDOW SILL INSET AT PANEL SIDING w/ EXTERIOR INSULATION

SCALE: NTS

© COPYRIGHT BEE ENGINEERS

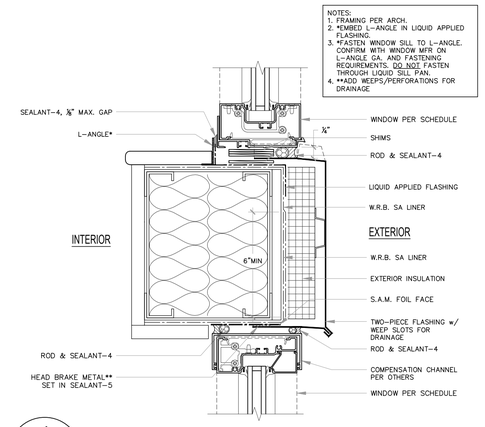

4 BE503 REF.ARCH B1/A-502 SECTION: STOREFRONT WINDOW HEAD / SILL AT TRANSOM

SCALE: NTS

© COPYRIGHT BEE ENGINEERS

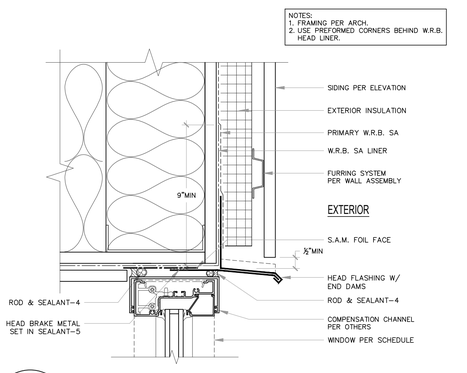

5 BE503 REF.ARCH B3/A-502 SECTION: STOREFRONT WINDOW HEAD INSET AT ENTRY SOFFIT

SCALE: NTS

© COPYRIGHT BEE ENGINEERS

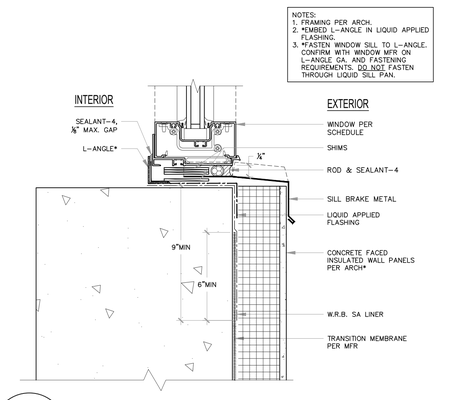

6 BE503 REF.ARCH A3/A-502 SECTION: STOREFRONT WINDOW SILL AT SIDING w/ EXTERIOR INSULATION

SCALE: NTS

© COPYRIGHT BEE ENGINEERS

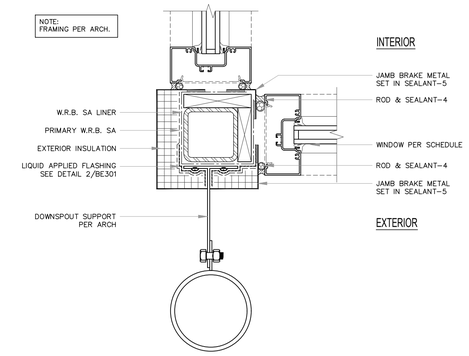

7 BE503 REF.ARCH A3/A-504 PLAN: STOREFRONT WINDOW JAMB AT CORNER w/ EXTERIOR INSULATION

SCALE: NTS

© COPYRIGHT BEE ENGINEERS

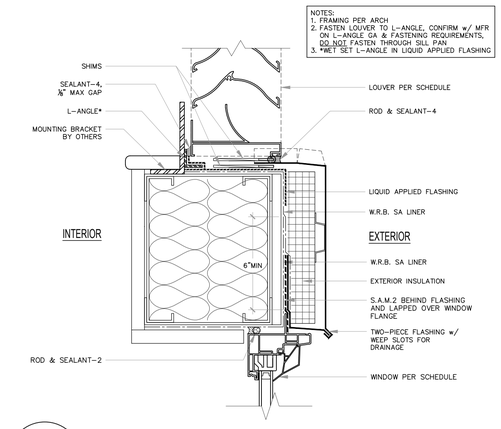

8 BE503 REF.ARCH C3/A-503 SECTION: FLANGED WINDOW HEAD AT LOUVER SILL

SCALE: NTS

© COPYRIGHT BEE ENGINEERS

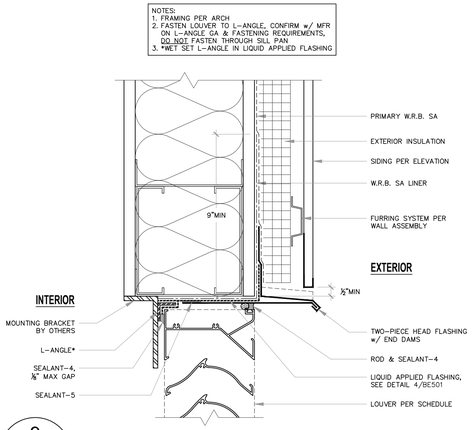

9 BE503 REF.ARCH A3/A-503 SECTION: LOUVER HEAD AT SIDING w/ EXTERIOR INSULATION

SCALE: NTS

© COPYRIGHT BEE ENGINEERS

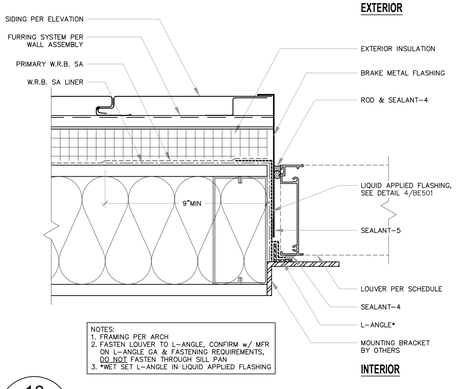

10 BE503 PLAN: LOUVER JAMB AT SIDING w/ EXTERIOR INSULATION

SCALE: NTS

© COPYRIGHT BEE ENGINEERS

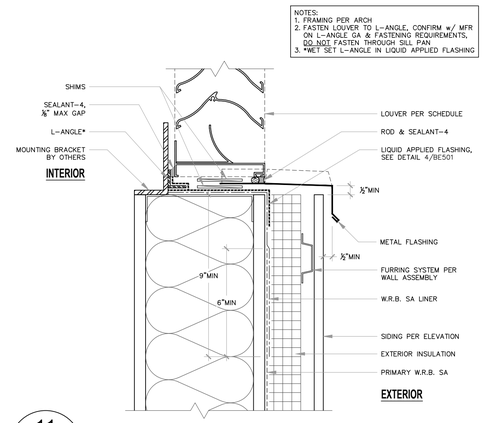

11 BE503 REF.ARCH A3/A-503 SECTION: LOUVER SILL AT SIDING w/ EXTERIOR INSULATION

SCALE: NTS

© COPYRIGHT BEE ENGINEERS

BEE ENGINEERS
170 W DAYTON ST, SUITE 206
EDMONDS, WA 98020
PH: 425 672-3900
FAX: 425 712-8608

PATRICK McMAHON
STATE OF WASHINGTON
24025265
REGISTERED
PROFESSIONAL ENGINEER

BARNABIE POINT PROJECT

3700 E Mercer Way
Mercer Island, WA 98040

	DATE	DESCRIPTION
	01.02.2025	DESIGN DEVELOPMENT
	06.04.2025	BUILDING PERMIT
	08.20.2025	COORDINATION SET
	10.22.2025	BP CORRECTIONS
	12.15.2025	100% CD SET

PHASE:

4 JUNE 2025

BUILDING PERMIT

BEE PROJECT #: 2403-1017

P.E.: Patrick McMahon
P.M.: Patrick McMahon
ENERGY: Katya Bautista
DRAFTER: Denin Dazey

© COPYRIGHT BEE ENGINEERS

THESE DRAWINGS ARE FOR GENERAL ARRANGEMENT OF MATERIALS ON SITE CONDITIONS GOVERN. DO NOT SCALE DRAWINGS TO OBTAIN DIMENSIONS.

SHEET NAME:

WINDOW & DOOR DETAILS

SHEET NUMBER:

BE503

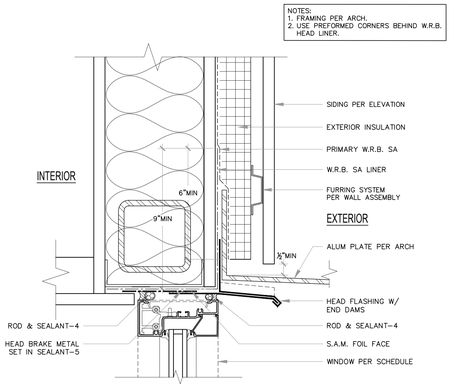

1 BE504 REF.ARCH B2/A-502 SECTION: STOREFRONT WINDOW HEAD INSET AT FLASHING SHROUD AT EAST WALL

SCALE: NTS

© COPYRIGHT BEE ENGINEERS

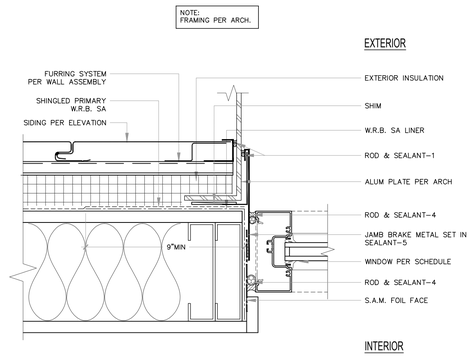

2 BE504 REF.ARCH A2/A-502 PLAN: STOREFRONT WINDOW JAMB INSET AT FLASHING SHROUD AT EAST WALL

SCALE: NTS

© COPYRIGHT BEE ENGINEERS

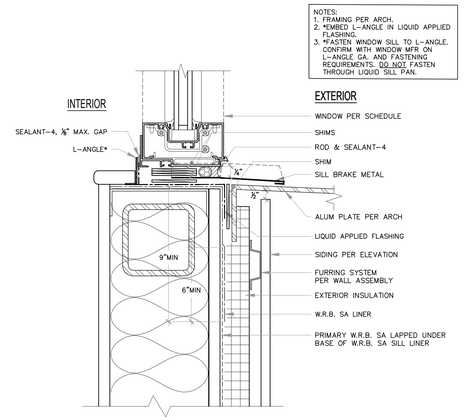

3 BE504 REF.ARCH B2/A-502 SECTION: STOREFRONT WINDOW SILL INSET AT FLASHING SHROUD AT EAST WALL

SCALE: NTS

© COPYRIGHT BEE ENGINEERS

BEE ENGINEERS
170 W DAYTON ST, SUITE 206
EDMONDS, WA 98020
PH: 425 672-3900
FAX: 425 712-8608

PATRICK McMAHON
STATE OF WASHINGTON
21825265
REGISTERED
PROFESSIONAL ENGINEER

BARNABIE POINT PROJECT

3700 E Mercer Way
Mercer Island, WA 98040

	DATE	DESCRIPTION
	01.02.2025	DESIGN DEVELOPMENT
	06.04.2025	BUILDING PERMIT
	08.20.2025	COORDINATION SET
	10.22.2025	BP CORRECTIONS
	12.15.2025	100% CD SET

PHASE:

4 JUNE 2025
BUILDING PERMIT

BEE PROJECT #: 2403-1017

P.E.: Patrick McMahon
P.M.: Patrick McMahon
ENERGY: Katya Bautista
DRAFTER: Denin Dazey

© COPYRIGHT BEE ENGINEERS

THESE DRAWINGS ARE FOR GENERAL ARRANGEMENT OF MATERIALS ON SITE CONDITIONS GOVERN. DO NOT SCALE DRAWINGS TO OBTAIN DIMENSIONS.

SHEET NAME:

WINDOW &
DOOR DETAILS

SHEET NUMBER:

BE504

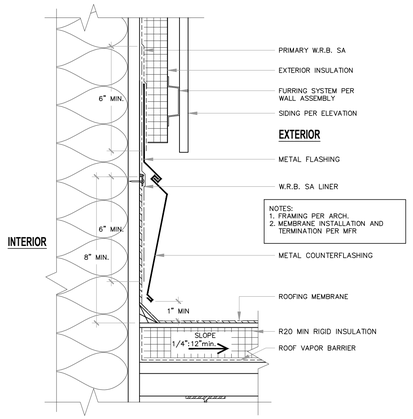

1 BE600 REF. ARCH C2/A-505 SECTION: BASE OF WALL AT ROOF W/ TWO PIECE FLASHING

SCALE: NTS

© COPYRIGHT BEE ENGINEERS

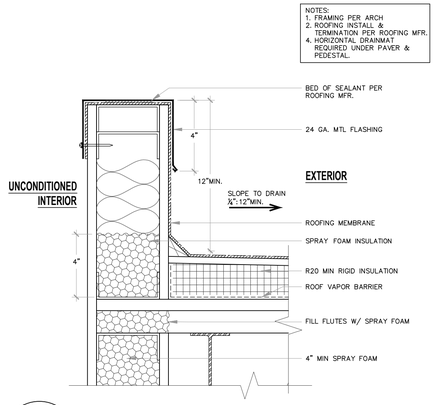

2 BE600 SECTION: MECHANICAL CURB AT ROOF

SCALE: NTS

© COPYRIGHT BEE ENGINEERS

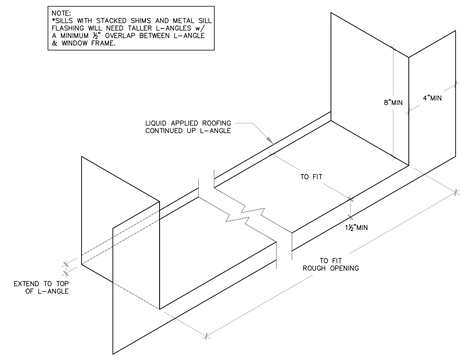

3 BE600 ISOMETRIC: LIQUID ROOFING MEMBRANE SILL PAN

SCALE: NTS

© COPYRIGHT BEE ENGINEERS

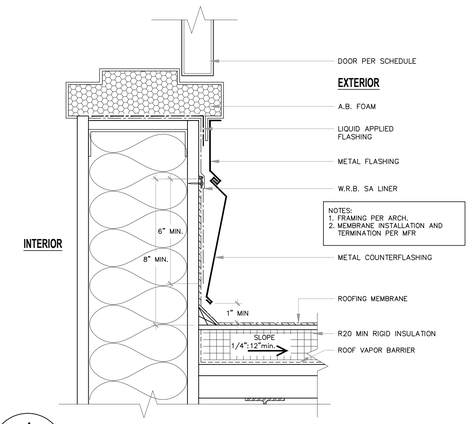

4 BE600 SECTION: H.M. DOOR THRESHOLD AT ROOF

SCALE: NTS

© COPYRIGHT BEE ENGINEERS

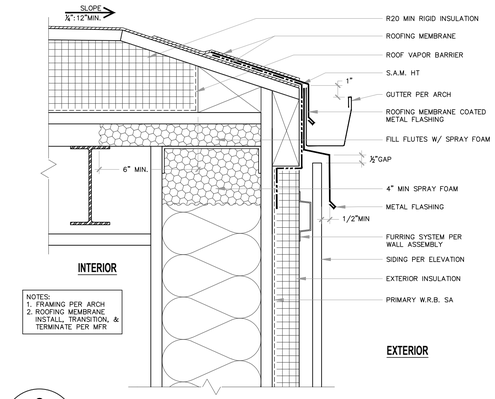

6 BE600 REF. ARCH C3/A-505 SECTION: ROOF EDGE @ GUTTER

SCALE: NTS

© COPYRIGHT BEE ENGINEERS

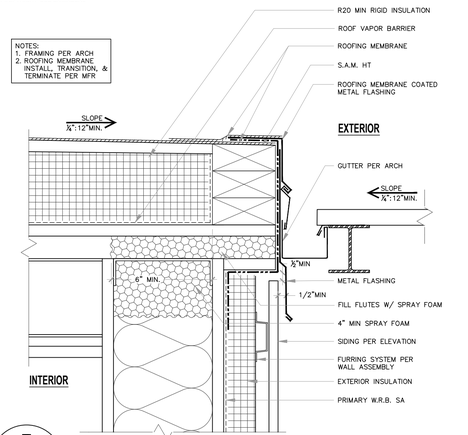

7 BE600 REF. ARCH B1/A-505 SECTION: ROOF EDGE @ CANOPY

SCALE: NTS

© COPYRIGHT BEE ENGINEERS

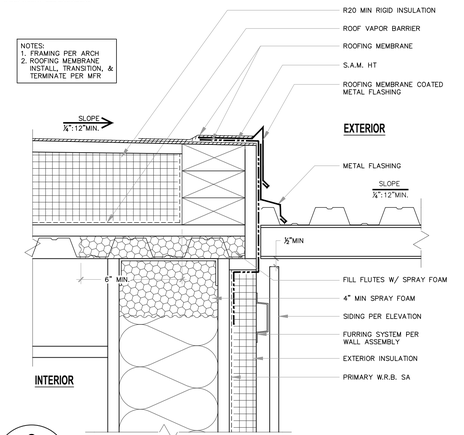

8 BE600 REF. ARCH B2/A-505 SECTION: ROOF EDGE @ CANOPY

SCALE: NTS

© COPYRIGHT BEE ENGINEERS

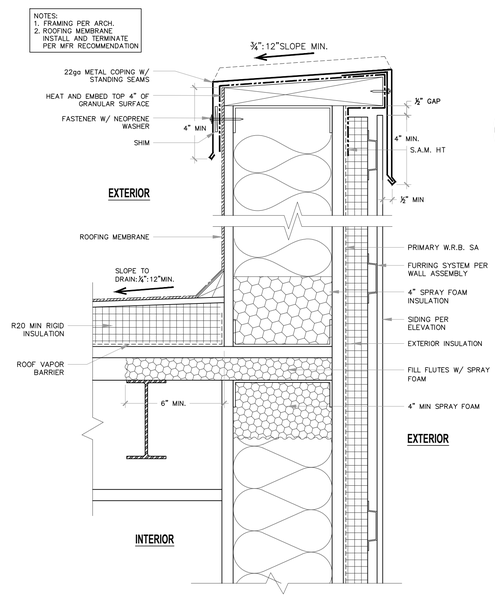

9 BE600 REF. ARCH A3/A-505 SECTION: PARAPET AT ROOF

SCALE: NTS

© COPYRIGHT BEE ENGINEERS

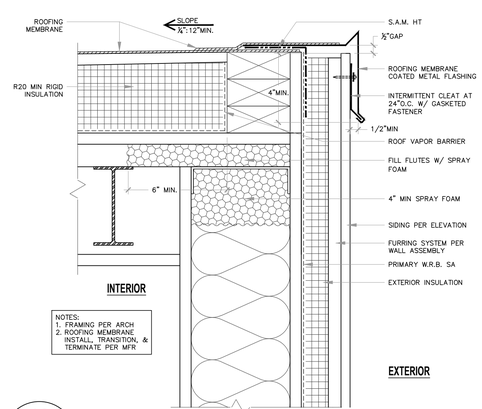

10 BE600 REF. ARCH B3/A-505 SECTION: ROOF EDGE w/o PARAPET

SCALE: NTS

© COPYRIGHT BEE ENGINEERS

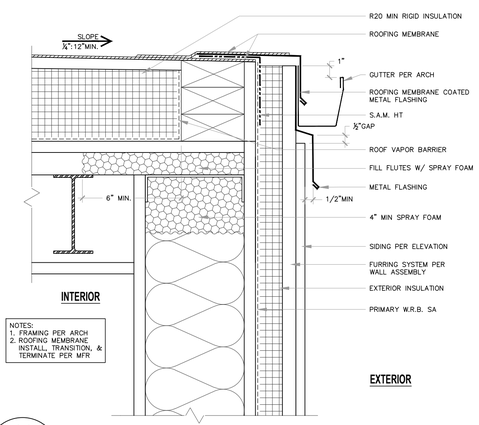

11 BE600 SECTION: ROOF EDGE @ GUTTER

SCALE: NTS

© COPYRIGHT BEE ENGINEERS

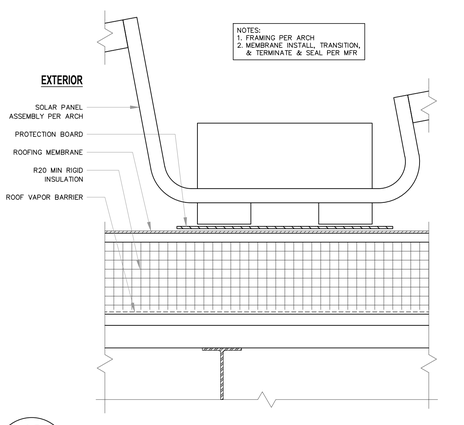

12 BE600 SECTION: SOLAR PANEL ASSEMBLY AT ROOF

SCALE: NTS

© COPYRIGHT BEE ENGINEERS

BEE ENGINEERS
170 W DAYTON ST, SUITE 206
EDMONDS, WA 98020
PH: 425 672-3900
FAX: 425 712-8608

PATRICK McMAHON
STATE OF WASHINGTON
24925
REGISTERED
PROFESSIONAL ENGINEER

BARNABIE POINT PROJECT

3700 E Mercer Way
Mercer Island, WA 98040

	DATE	DESCRIPTION
	01.02.2025	DESIGN DEVELOPMENT
	06.04.2025	BUILDING PERMIT
	08.20.2025	COORDINATION SET
	10.22.2025	BP CORRECTIONS
	12.15.2025	100% CD SET

PHASE:

4 JUNE 2025

BUILDING PERMIT

BEE PROJECT #: 2403-1017

P.E.: Patrick McMahon
P.M.: Patrick McMahon
ENERGY: Katya Bautista
DRAFTER: Denin Dazey

© COPYRIGHT BEE ENGINEERS

THESE DRAWINGS ARE FOR GENERAL ARRANGEMENT OF MATERIALS ON SITE CONDITIONS GOVERN. DO NOT SCALE DRAWINGS TO OBTAIN DIMENSIONS.

SHEET NAME:

ROOF DETAILS

SHEET NUMBER:

BE600

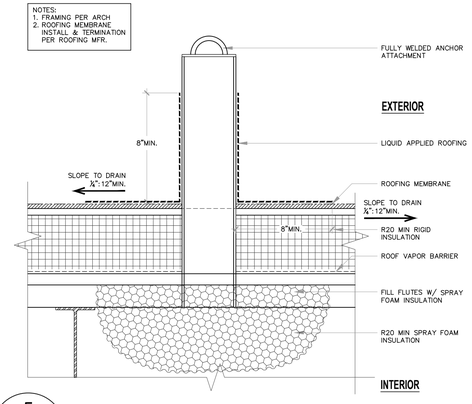

5 BE601 SECTION: ANCHOR ATTACHMENT AT ROOF

SCALE: NTS

© COPYRIGHT BEE ENGINEERS

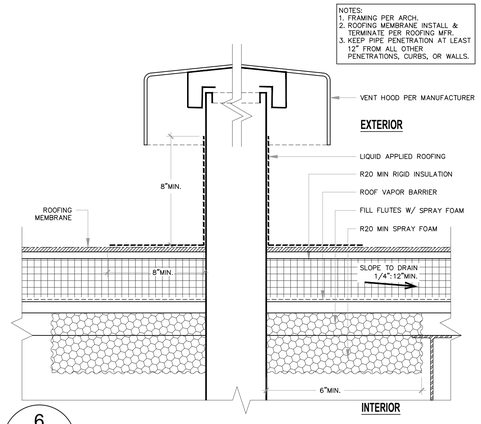

6 BE601 SECTION: VENT PENETRATION AT ROOF

SCALE: NTS

© COPYRIGHT BEE ENGINEERS

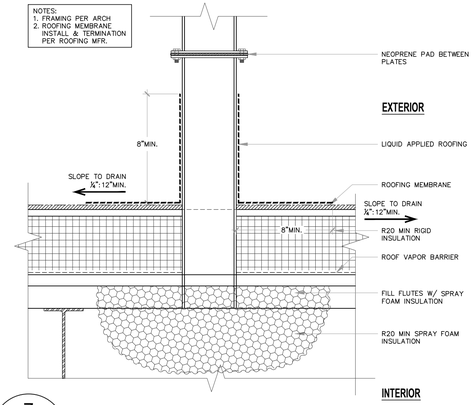

7 BE601 SECTION: POST ATTACHMENT AT ROOF

SCALE: NTS

© COPYRIGHT BEE ENGINEERS

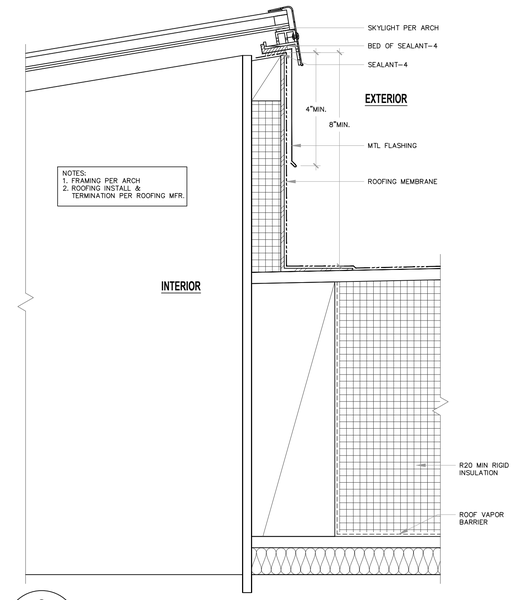

8 BE601 REF ARCH A1/A-505 SECTION: SKYLIGHT CURB AT ROOF

SCALE: NTS

© COPYRIGHT BEE ENGINEERS

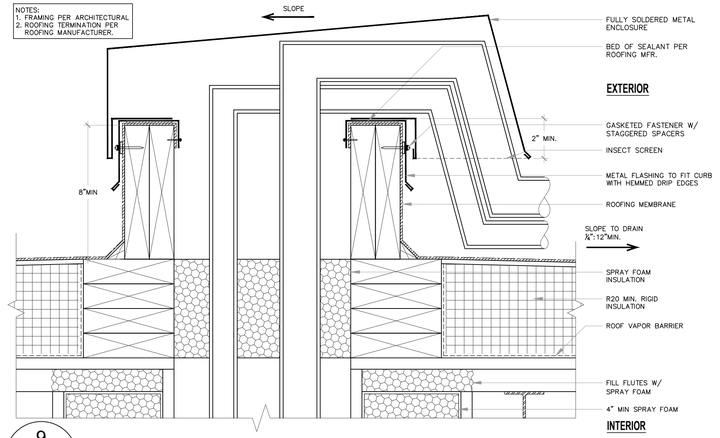

9 BE601 SECTION: SHEET METAL ROOF ENCLOSURE @ PIPE PENETRATION

SCALE: NTS

© COPYRIGHT BEE ENGINEERS

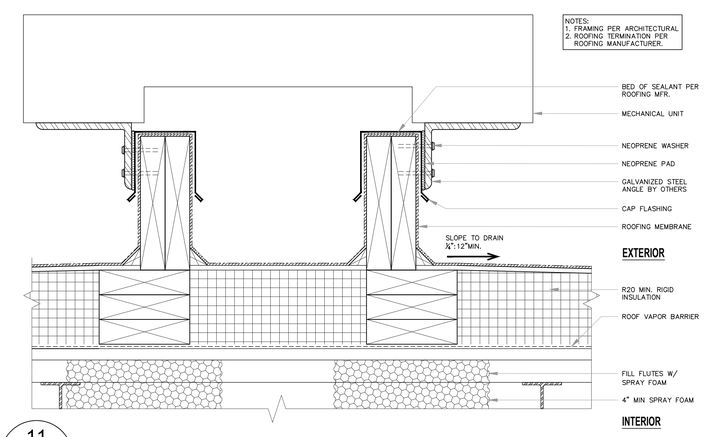

11 BE601 SECTION: MECHANICAL UNIT SUPPORTS @ ROOF

SCALE: NTS

© COPYRIGHT BEE ENGINEERS

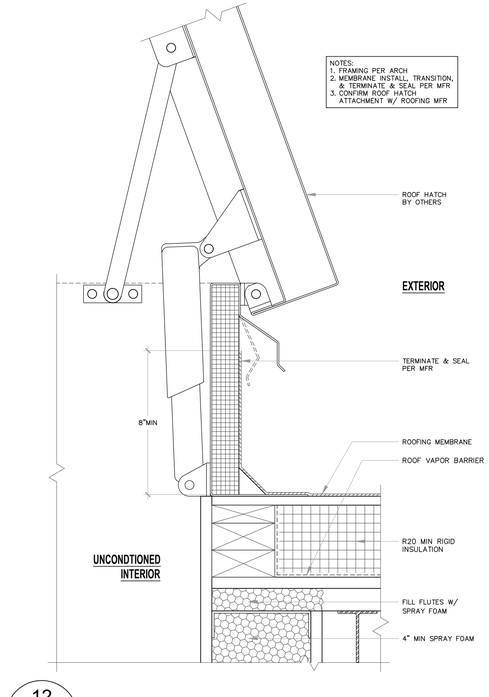

12 BE601 SECTION: ROOF HATCH

SCALE: NTS

© COPYRIGHT BEE ENGINEERS

BEE ENGINEERS
170 W DAYTON ST, SUITE 206
EDMONDS, WA 98020
PH: 425 672-3900
FAX: 425 712-8608

PATRICK McMAHON — STATE OF WASHINGTON — 24029366 — REGISTERED PROFESSIONAL ENGINEER

BARNABIE POINT PROJECT

3700 E Mercer Way
Mercer Island, WA 98040

	DATE	DESCRIPTION
	01.02.2025	DESIGN DEVELOPMENT
	06.04.2025	BUILDING PERMIT
	08.20.2025	COORDINATION SET
	10.22.2025	BP CORRECTIONS
	12.15.2025	100% CD SET

PHASE:

4 JUNE 2025
BUILDING PERMIT

BEE PROJECT #: 2403-1017

P.E.:	Patrick McMahon
P.M.:	Patrick McMahon
ENERGY:	Katya Bautista
DRAFTER:	Denin Dazey

© COPYRIGHT BEE ENGINEERS

THESE DRAWINGS ARE FOR GENERAL ARRANGEMENT OF MATERIALS ON SITE CONDITIONS GOVERN. DO NOT SCALE DRAWINGS TO OBTAIN DIMENSIONS.

SHEET NAME:

ROOF DETAILS

SHEET NUMBER:

BE601

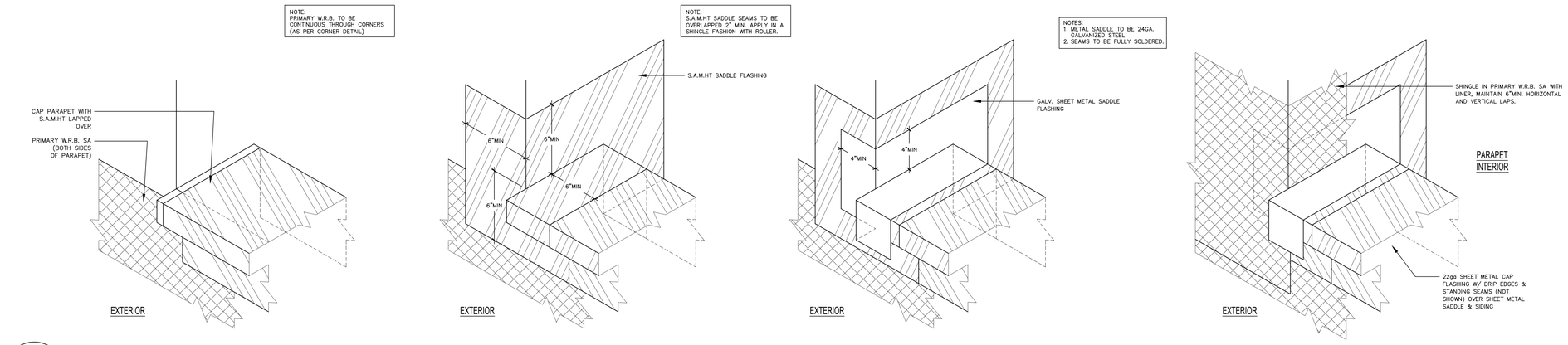

1
BE602
ASSEMBLY: PARAPET SADDLE FLASHING w/ S.A.M. AT WALL CORNER

SCALE: NTS
© COPYRIGHT BEE ENGINEERS

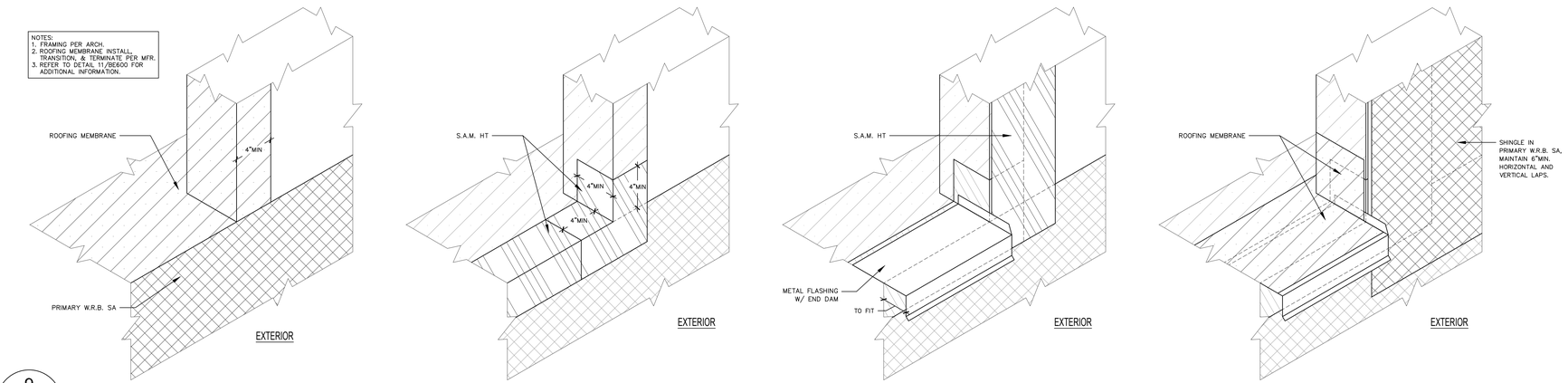

9
BE602
REF.ARCH 3/A510
ASSEMBLY: ROOF EDGE AT PARAPET

SCALE: NTS
© COPYRIGHT BEE ENGINEERS

BEE ENGINEERS
170 W DAYTON ST, SUITE 206
EDMONDS, WA 98020
PH: 425 672-3900
FAX: 425 712-8608

PATRICK McMAHON
STATE OF WASHINGTON
34029365
REGISTERED PROFESSIONAL ENGINEER

BARNABIE POINT PROJECT
3700 E Mercer Way
Mercer Island, WA 98040

DATE	DESCRIPTION
01.02.2025	DESIGN DEVELOPMENT
06.04.2025	BUILDING PERMIT
08.20.2025	COORDINATION SET
10.22.2025	BP CORRECTIONS
12.15.2025	100% CD SET

PHASE:

4 JUNE 2025
BUILDING PERMIT

BEE PROJECT #: 2403-1017

P.E.: Patrick McMahon
P.M.: Patrick McMahon
ENERGY: Katya Bautista
DRAFTER: Denin Dazey

© COPYRIGHT BEE ENGINEERS

THESE DRAWINGS ARE FOR GENERAL ARRANGEMENT OF MATERIALS ON SITE CONDITIONS GOVERN. DO NOT SCALE DRAWINGS TO OBTAIN DIMENSIONS.

SHEET NAME:

ROOF DETAILS

SHEET NUMBER:

BE602

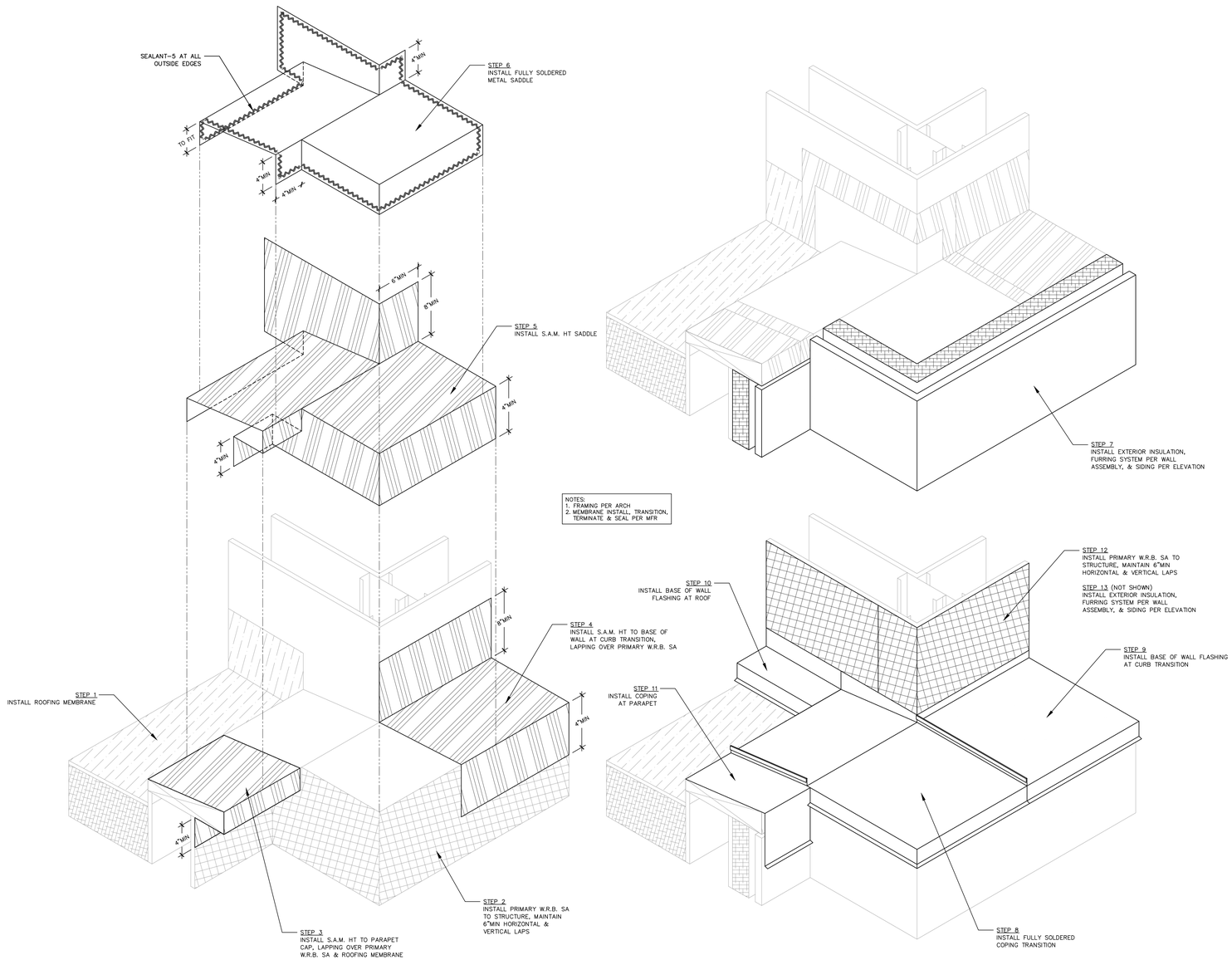

9
BE603
REF. ARCH
5/A510

ASSEMBLY: SADDLE FLASHING w/ S.A.M. AT PARAPET CORNER TRANSITION

SCALE: NTS

© COPYRIGHT BEE ENGINEERS

BEE ENGINEERS
170 W DAYTON ST, SUITE 206
EDMONDS, WA 98020
PH: 425 672-3900
FAX: 425 712-8608

PATRICK McMAHON
STATE OF WASHINGTON
28029365
REGISTERED
PROFESSIONAL ENGINEER

BARNABIE POINT PROJECT

3700 E Mercer Way
Mercer Island, WA 98040

	DATE	DESCRIPTION
	01.02.2025	DESIGN DEVELOPMENT
	06.04.2025	BUILDING PERMIT
	08.20.2025	COORDINATION SET
	10.22.2025	BP CORRECTIONS
	12.15.2025	100% CD SET

PHASE:

4 JUNE 2025
BUILDING PERMIT

BEE PROJECT #: 2403-1017

P.E.:	Patrick McMahon
P.M.:	Patrick McMahon
ENERGY:	Katya Bautista
DRAFTER:	Denin Dazey

© COPYRIGHT BEE ENGINEERS

THESE DRAWINGS ARE FOR GENERAL ARRANGEMENT OF MATERIALS ON SITE CONDITIONS GOVERN. DO NOT SCALE DRAWINGS TO OBTAIN DIMENSIONS.

SHEET NAME:

ROOF DETAILS

SHEET NUMBER:

BE603

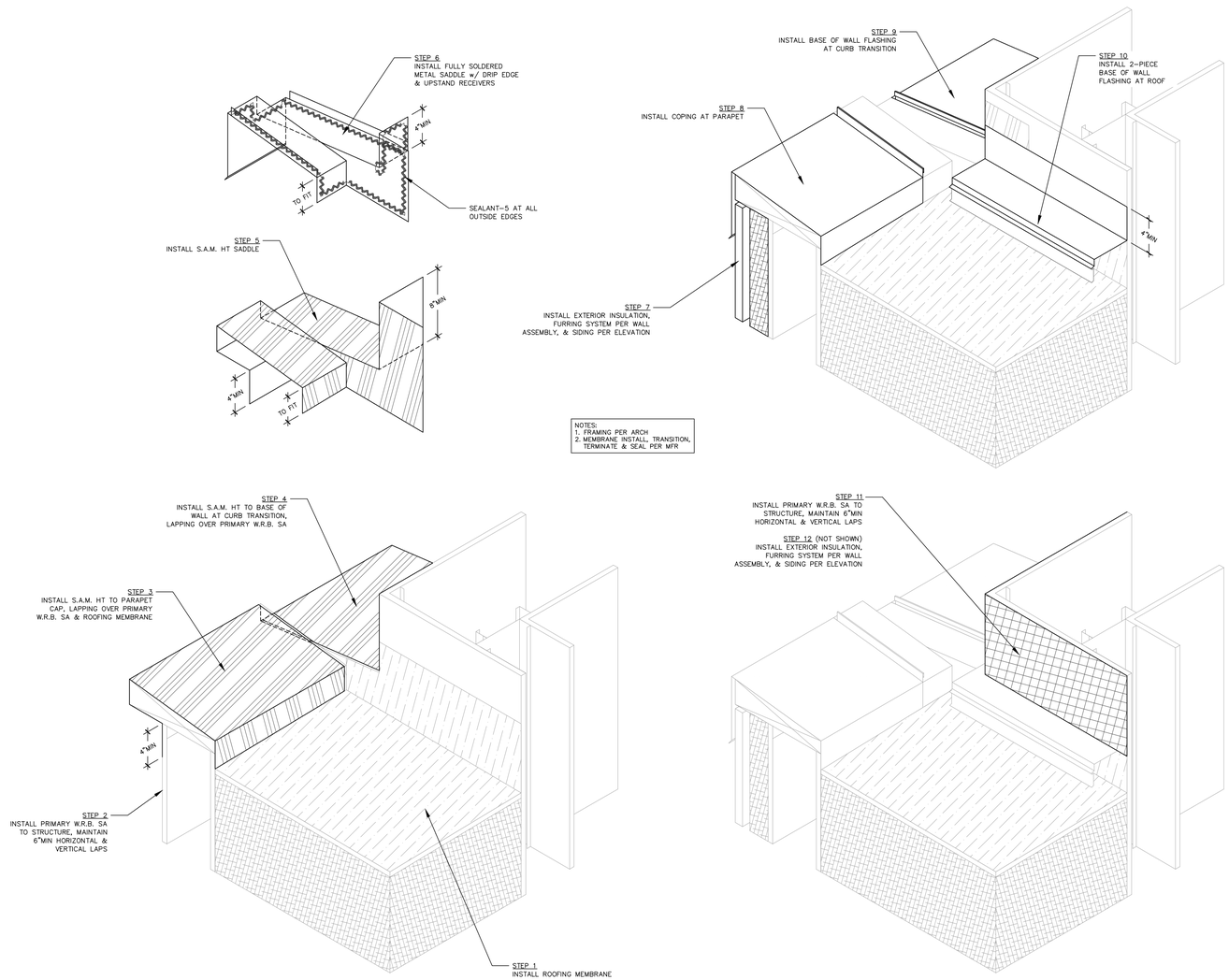

9
BE604
REF.ARCH
1/A510

ASSEMBLY: SADDLE FLASHING w/ S.A.M. AT CORNER TRANSITION

SCALE: NTS

© COPYRIGHT BEE ENGINEERS

BEE ENGINEERS
170 W DAYTON ST, SUITE 206
EDMONDS, WA 98020
PH: 425 672-3900
FAX: 425 712-8608

PATRICK McMAHON
STATE OF WASHINGTON
24029365
REGISTERED
PROFESSIONAL ENGINEER

BARNABIE POINT PROJECT

3700 E Mercer Way
Mercer Island, WA 98040

DATE	DESCRIPTION
01.02.2025	DESIGN DEVELOPMENT
06.04.2025	BUILDING PERMIT
08.20.2025	COORDINATION SET
10.22.2025	BP CORRECTIONS
12.15.2025	100% CD SET

PHASE:

4 JUNE 2025
BUILDING PERMIT

BEE PROJECT #: 2403-1017

P.E.: Patrick McMahon
P.M.: Patrick McMahon
ENERGY: Katya Bautista
DRAFTER: Denin Dazey

© COPYRIGHT BEE ENGINEERS

THESE DRAWINGS ARE FOR GENERAL ARRANGEMENT OF MATERIALS ON SITE CONDITIONS GOVERN. DO NOT SCALE DRAWINGS TO OBTAIN DIMENSIONS.

SHEET NAME:

ROOF DETAILS

SHEET NUMBER:

BE604

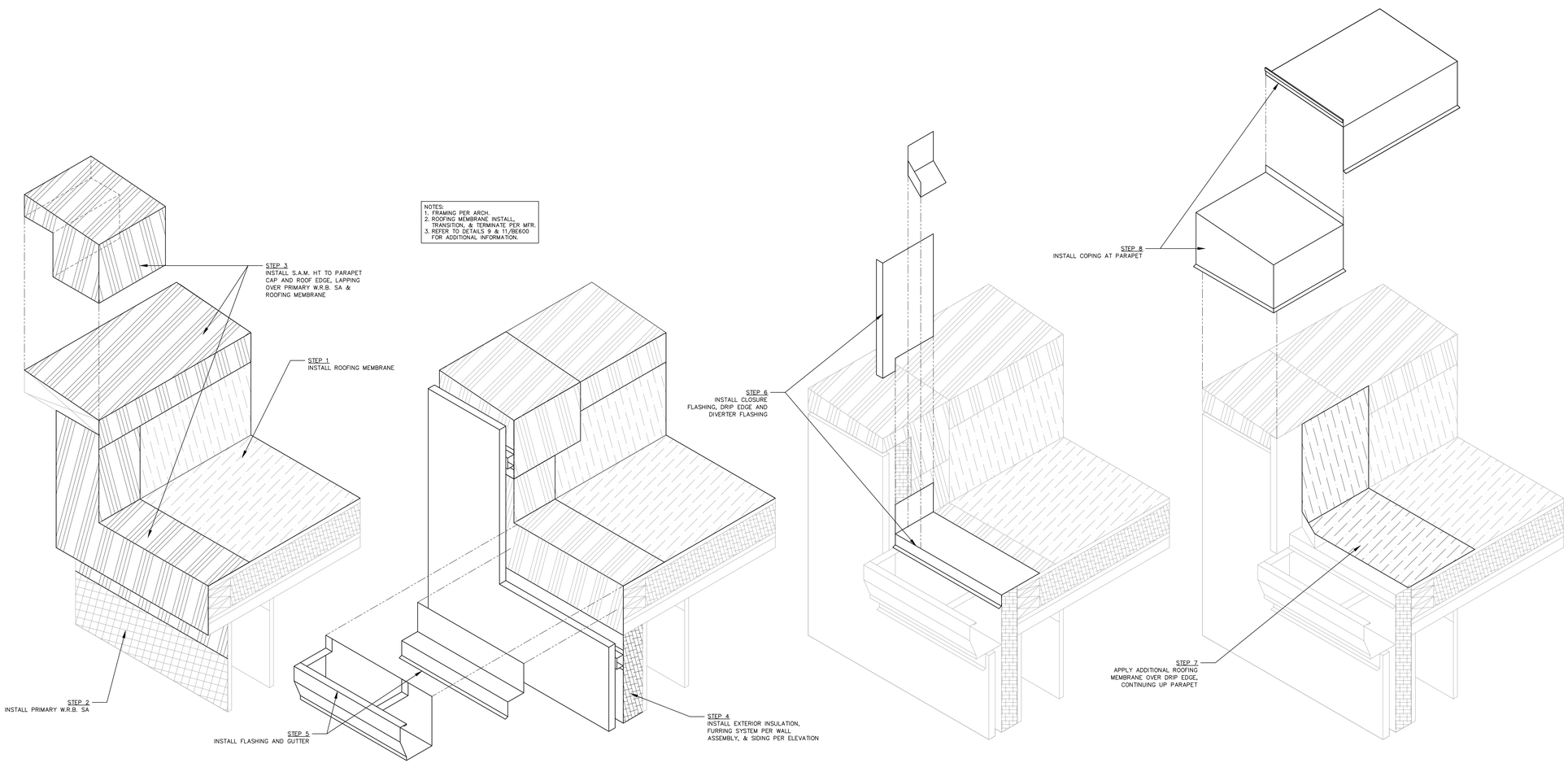

9
BE605
REF.ARCH 4.7/A510

ASSEMBLY: ROOF EDGE AT PARAPET CORNER

SCALE: NTS

© COPYRIGHT BEE ENGINEERS

BEE ENGINEERS
170 W DAYTON ST, SUITE 206
EDMONDS, WA 98020
PH: 425 672-3900
FAX: 425 712-8608

PATRICK McMAHON
STATE OF WASHINGTON
34029365
REGISTERED PROFESSIONAL ENGINEER

BARNABIE POINT PROJECT

3700 E Mercer Way
Mercer Island, WA 98040

DATE	DESCRIPTION
01.02.2025	DESIGN DEVELOPMENT
06.04.2025	BUILDING PERMIT
08.20.2025	COORDINATION SET
10.22.2025	BP CORRECTIONS
12.15.2025	100% CD SET

PHASE:

4 JUNE 2025
BUILDING PERMIT

BEE PROJECT #: 2403-1017

P.E.: Patrick McMahon
P.M.: Patrick McMahon
ENERGY: Katya Bautista
DRAFTER: Denin Dazey

© COPYRIGHT BEE ENGINEERS

THESE DRAWINGS ARE FOR GENERAL ARRANGEMENT OF MATERIALS ON SITE CONDITIONS GOVERN. DO NOT SCALE DRAWINGS TO OBTAIN DIMENSIONS.

SHEET NAME:

ROOF DETAILS

SHEET NUMBER:

BE605

2021 Washington State Energy Code, Commercial Provision

1. C103.2 Information on Construction Documents

Construction documents shall be drawn to scale upon suitable material. Electronic media documents are permitted to be submitted when approved by the code official.

Construction documents shall be of sufficient clarity to indicate the location, nature and extent of the work proposed, and show in sufficient detail pertinent data and features of the building, systems and equipment as herein governed.

Details shall include, but are not limited to, as applicable:

1. Energy compliance path per Section C401 or C501.
2. Insulation materials and their R-values.
3. Fenestration U-factors and SHGCs.
4. Area-weighted U-factor and SHGC calculations.
5. Mechanical system design criteria.
6. Mechanical and service water heating system and equipment types, sizes and efficiencies.
7. Economizer description.
8. Equipment and systems controls.
9. Fan motor horsepower (hp) and controls.
10. Duct sealing, duct and pipe insulation and location.
11. Lighting fixture schedule with wattage and control narrative.
12. Location of daylight zones on floor plan.
13. Air barrier details including all air barrier boundaries and associated square foot calculations on all six sides of the air barrier as applicable.

2. C402.5 Air Leakage - Thermal Envelope

The thermal envelope of buildings shall comply with Sections C402.5.1.1 through C402.5.5.8.

3. C402.5.1 Air Barriers

A continuous air barrier shall be provided throughout the building thermal envelope. The continuous air barriers shall be located on the inside or outside of the building thermal envelope, located within the assemblies composing the building thermal envelope, or any combination thereof. The air barrier shall comply with Sections C402.5.1.1 and C402.5.1.2.

4. C402.5.1.1 Air Barrier Construction

The continuous air barrier shall be constructed to comply with the following:

1. The air barrier shall be continuous for all assemblies that are the thermal envelope of the building and across the joints and assemblies.
2. Air barrier joints and seams shall be sealed, including sealing transitions in places and changes in materials. The joints and seals shall be securely installed in or on the joint for its entire length so as not to dislodge, loosen or otherwise impair its ability to resist positive and negative pressure from wind, stack effect and mechanical ventilation.
3. Penetrations of the air barrier shall be caulked, gasketed or otherwise sealed in a manner compatible with the construction materials and location. Sealing shall allow for expansion, contraction and mechanical vibration. Joints and seams associated with penetrations shall be sealed in the same manner or taped. Sealing materials shall be securely installed around the penetrations so as not to dislodge, loosen or otherwise impair the penetrations' ability to resist positive and negative pressure from wind, stack effect, and mechanical ventilation. Sealing of concealed fire sprinklers, where required, shall be in a manner that is recommended by the manufacturer. Caulking or other adhesive sealants shall not be used to fill voids between fire sprinkler cover plates and walls or ceilings.
4. Recessed lighting fixtures shall comply with Section C402.5.8. Where similar objects are installed which penetrate the air barrier, provisions shall be made to maintain the integrity of the air barrier.
5. Construction documents shall contain a diagram showing the building's pressure boundary in plan(s) and section(s) and a calculation of the area of the pressure boundary to be considered in the test.

5. C402.5.1.2 Air Barrier Compliance

A continuous air barrier for the opaque building envelope shall comply with the following:

1. Group R dwelling units that are accessed directly from the outdoors shall meet the provisions of Section C402.5.2.
2. All other buildings or portions of buildings shall meet the provisions of Section C402.5.3.

6. C402.5.3 Building Thermal Envelope Testing

The building thermal envelope shall be tested in accordance with ASTM E779, ANSI/RESNET/ICC 380, ASTM E3158 or ASTM E1827 or an equivalent method approved by the code official. The measured air leakage shall not exceed 0.25 cfm/ft^2 (1.27 L/s x m^2) of the building thermal envelope area at a pressure differential of 0.3 inch water gauge (75 Pa). Alternatively, portions of the building shall be tested and the measured air leakages shall be area weighted by the surface areas of the building envelope in each portion. The weighted average test results shall not exceed the whole building leakage limit. In the alternative approach, the following portions of the building shall be tested:

1. The entire envelope area of all stories that have any spaces directly under a roof.
2. The entire envelope area of all stories that have a building entrance, exposed floor, or loading dock, or are below grade.
3. Representative above-grade sections of the building totaling at least 25 percent of the wall area enclosing the remaining conditioned space.
4. Test shall be accomplished using either: a) both pressurization and depressurization, or b) pressurization alone, but not depressurization alone. The test results shall be plotted against the correct P for pressurization in accordance with Section 9.4 of ASTM E779.

Where the measured air leakage rate exceeds 0.25 cfm/ft2 (2.0 L/s x m2) corrective action shall be taken to seal leaks in the air barrier. Post-corrective action testing and repeated corrective action measures will be taken until the required air leakage rating is achieved. Final passing of the air leakage test results shall be submitted to the code official.

7. C402.5.5 Rooms Containing Fuel-Burning Appliances

Where combustion air is supplied through openings in an exterior wall to a room or space containing a space conditioning fuel-burning appliance, one of the following shall apply:

1. The room or space containing the appliance shall be located outside of the building thermal envelope.
2. The room or space containing the appliance shall be enclosed and isolated from conditioned spaces inside the building thermal envelope. Such rooms shall comply with all of the following:
   - 2.1. The walls, floor and ceiling that separate the enclosed room or space from the conditioned spaces shall be insulated to be at least equivalent to the insulation requirement of below grade walls as specified in Table C402.1.3 or C402.1.4.
   - 2.2. The walls, floors and ceiling that separate the enclosed room or space from conditioned spaces be sealed in accordance with Section C402.5.1.1.
   - 2.3. The doors into the enclosed room or space shall be fully gasketed.
   - 2.4. Water lines and ducts in the enclosed room or space shall be insulated in accordance with Section C403.
   - 2.5. Where the air duct supplying combustion air to the enclosed room or space passes through conditioned space, the duct shall be insulated to an R-value of not less than R-16.

Exceptions:

Fireplaces and stoves complying with Sections 901 through 905 of the International Mechanical Code, and Section 2111.13 of the International Building Code.

8. C402.5.6 Doors and Access Openings to Shafts, Chutes, Stairways, and Elevator Lobbies

Doors and access openings from conditioned space to shafts, chutes, stairways and elevator lobbies shall be gasketed, weatherstripped or sealed.

Exceptions:

1. Door openings required to comply with Section 716 of the International Building Code.
2. Doors and door openings required to comply with UL 1784 by the International Building Code.

9. C402.5.7 Air Intakes, Exhaust Openings, Stairways and Shafts

Stairway enclosures, elevator shaft vents and other outdoor air intakes and exhaust openings integral to the building envelope shall be provided with dampers in accordance with Section C403.7.8.

10. C402.5.8 Loading Dock Weatherseals

Cargo door openings and loading dock door openings shall be equipped with weatherseals that restrict infiltration and provide direct contact along the top and sides of vehicles that are parked in the doorway.

11. C402.5.9 Vestibules

All building entrances shall be protected with an enclosed vestibule, with all doors opening into and out of the vestibule equipped with self-closing devices. Vestibules shall be designed so that in passing through the vestibule it is not necessary for the interior and exterior doors to open at the same time. The installation of one or more revolving doors in the building entrance shall not eliminate the requirement that a vestibule be provided on any doors adjacent to revolving doors. For the purposes of this section, "building entrances" shall include exit-only doors in buildings where separate doors for entering and exiting are provided.

Interior and exterior doors shall have a minimum distance between them of not less than 7 feet. The exterior envelope of conditioned vestibules shall comply with the requirements for a conditioned space. Either the interior or exterior envelope of unconditioned vestibules shall comply with the requirements for a conditioned space. The building lobby is not considered a vestibule.

Exception: Vestibules are not required for the following:

1. Doors not intended to be used as building entrances.
2. Unfinished ground-level space greater than 3,000 square feet (298 m^2) if a note is included on the permit documents at each exterior entrance to the space stating "Vestibule required at time of tenant build-out if entrance serves a space greater than 3,000 square feet in area".
3. Doors opening directly from a sleeping unit or dwelling unit.
4. Doors between a space smaller than 3,000 square feet (298 m^2) in area and the exterior of the building or the building entrance lobby, where those doors do not comprise one of the primary entrance paths to the remainder of the building. The space must be enclosed and separated without transfer air paths from the primary building entrance paths. If there are doors between the space and the primary entrance path then the doors shall be equipped with self-closing devices so the space acts as a vestibule for the primary building entrance.
5. Revolving doors.
6. Doors used primarily to facilitate vehicular movement or material handling and adjacent personnel doors.
7. In buildings less than three stories above grade or in spaces that do not directly connect with the building elevator lobby, doors that have an air curtain with a velocity of not less than 6.56 feet per second (2 m/s) at the floor that have been tested in accordance with ANSI/AMCA 220 and installed in accordance with the manufacturer's instructions. Manual or automatic controls shall be provided that will operate the air curtain with the opening and closing of the door. Air curtains and their controls shall comply with Section C408.2.3.
8. Building entrances in buildings that are less than four stories above grade and less than 10,000 square feet in area.
9. Elevator doors in parking garages provided that the elevators have an enclosed lobby at each level of the garage.
10. Entrances to semi-heated spaces.
11. Doors that are used only to access outdoor seating areas that are separated from adjacent walking areas by a fence or other barrier.

12. C402.5.10 Recessed Lighting

Recessed luminaires installed in the building thermal envelope shall be all of the following:

1. IC Rated.
2. Labeled as having an air leakage rate of not more than 2.0 cfm (0.944 L/s) when tested in accordance with ASTM E 283 at a 1.57 psf (75 Pa) pressure differential.
3. Sealed with a gasket or caulk between the housing and interior wall or ceiling covering.

13. C402.5.11 Operable Openings Interlocking

Where any operable openings to the outdoors are larger than 48 square feet (4.47 m^2) in area, such openings shall be interlocked with the heating and cooling system as required by Section C403.4.1.6.

Exceptions:

1. Separately zoned areas associated with the preparation of food that contain appliances that contribute to the HVAC loads of a restaurant or similar type of occupancy.
2. Warehouses that utilize overhead doors for the function of the occupancy, where approved by the code official.
3. The outer entrance doors where located in the exterior wall and are part of a vestibule system.
4. Alterations to existing buildings.

14. C103.6.3 Compliance Documentation

All energy code compliance forms and calculations shall be delivered in one document to the building owner as part of the project record documents or manuals, or as a standalone document. This document shall include the specific energy code year utilized for compliance determination for each system. NFRC certificates for the installed windows, list of total area for each NFRC certificate, the interior lighting power compliance path (building area, space-by-space) used to calculate the lighting power allowance.

For projects complying with Section C401.2 Item 1, the documentation shall include:

1. The envelope insulation compliance path (prescriptive or component performance).
2. All completed code compliance forms, and all compliance calculations including, but not limited to, those required by sections C402.1.5, C403.2.12.1, C405.4, and C405.5.

For projects complying with Section C401.2 Item 2, the documentation shall include:

1. A list of all proposed envelope component types, areas and U-values.
2. A list of all lighting area types with areas, lighting power allowance, and installed lighting power density.
3. A list of each HVAC system modeled with the assigned and proposed system type.
4. Electronic copies of the baseline and proposed model input and output file. The input files shall be in a format suitable for rerunning the model and shall not consist solely of formatted reports of the inputs.

15. Preparation of the Building

Contractor is responsible for sealing or otherwise effectively isolating all "intentional" holes in the test boundary.

Contractor will be liable for costs of removal of finishes and/or cladding required to provide corrections to the air barrier system.

LEGEND

-AIR BARRIER & BUILDING THERMAL ENVELOPE

-CONDITIONED AND SEMI-HEATED SPACES

Air Barrier Design progress table			
Phase Description	**Update date**	**Architectural Set**	**Changes in Boundaries & Calculations**
Review set			
Building permit set	05.26.2025	250520 BPP ARCH PDF SET	x
Coordination Set	08.14.2025	250801 BPP Backgrounds	x
IFC set	11.04.2025	250825 BPP 90PCT CD SET	-
100% CD set	12.09.2025	2025-1203_2506-131-SUB2-PLANS_review	-
Testing			

Whole Building

BUILDING ENVELOPE AIR LEAKAGE CALCULATIONS
Based on AutoCAD and PDF drawings provided by architect.

	Floor Perimeter ft	Level Height ft	Floor Area ft²	Exterior Floor area ft²	Exterior Ceiling Area ft²	Exterior Wall Area ft²	Thermal Envelope Area ft²	Thermal Envelope Volume ft³
Level B01	379	12.0	7,643	7,643	0	4,548	12,191	91,716
Level 01	627	12.0	16,254	8,611	75	7,524	16,210	195,048
Level 02	631	12.0	16,311	132	7,859	7,572	15,563	195,732
Level 03	513	11.0	8,892	440	8,801	5,643	14,884	97,812
Roof/Elevator	38	10.3	91	0	91	391	482	937
Total Building	2,188	57	49,191	16,826	16,826	25,678	59,330	581,245
MAX ALLOWED AIR LEAKAGE OF BUILDING ENVELOPE								
per AREA of Building Thermal Envelope at 75 Pa			0.25 cfm/ft² x	59,330	ft² =		14,833	CFM
AVE. GRADE			101.2'					
T.O. ROOF DECK			140.8'					
REDUCED AIR INFILTRATION IN ACCORDANCE WITH SECTION C406.2.13 CREDIT IS NOT APPLIED								

BASED ON : 2025-1203_2506-131-SUB2-PLANS_review

BEE ENGINEERS
170 W DAYTON ST, SUITE 206
EDMONDS, WA 98020
PH: 425 672-3900
FAX: 425 712-8608

PATRICK K. McMAHON
STATE OF WASHINGTON
19029
REGISTERED
PROFESSIONAL ENGINEER

BARNABIE POINT PROJECT
3700 E Mercer Way
Mercer Island, WA 98040

	DATE	DESCRIPTION
	01.02.2025	DESIGN DEVELOPMENT
	06.04.2025	BUILDING PERMIT
	08.20.2025	COORDINATION SET
	10.22.2025	BP CORRECTIONS
	12.15.2025	100% CD SET

PHASE:

4 JUNE 2025
BUILDING PERMIT

BEE PROJECT #: 2403-1017

P.E.: Patrick McMahon
P.M.: Patrick McMahon
ENERGY: Katya Bautista
DRAFTER: Denin Dazey

© COPYRIGHT BEE ENGINEERS

THESE DRAWINGS ARE FOR GENERAL ARRANGEMENT OF MATERIALS ON SITE CONDITIONS GOVERN. DO NOT SCALE DRAWINGS TO OBTAIN DIMENSIONS.

SHEET NAME:

AIR BARRIER NOTES

SHEET NUMBER:

BE800

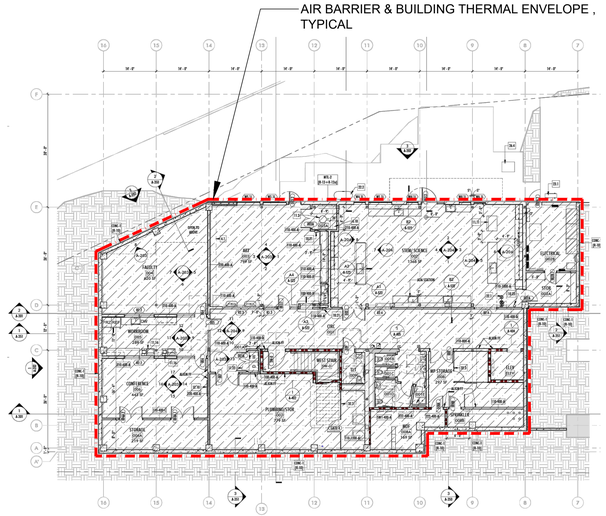

LEVEL B01 FLOOR PLAN
SCALE: NTS
REFERENCE ARCH: 1/A-100

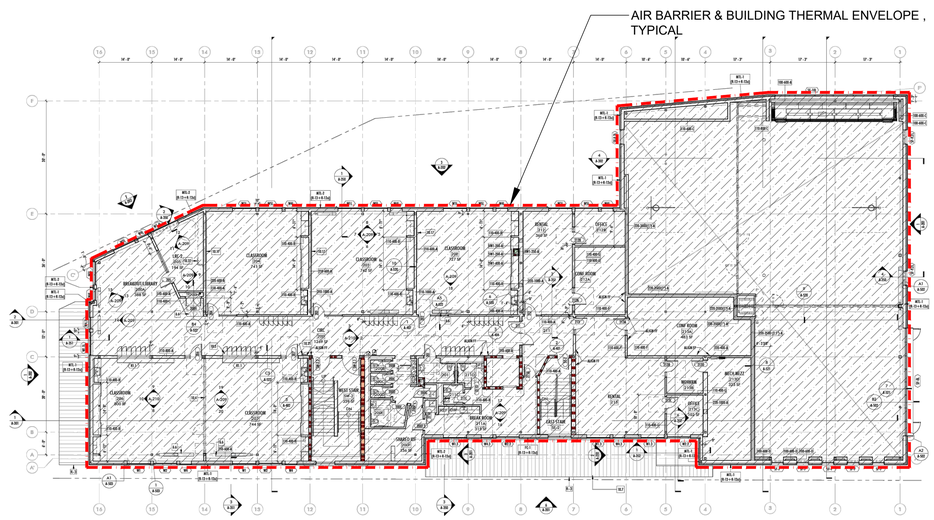

LEVEL 02 FLOOR PLAN
SCALE: NTS
REFERENCE ARCH: 1/A-102

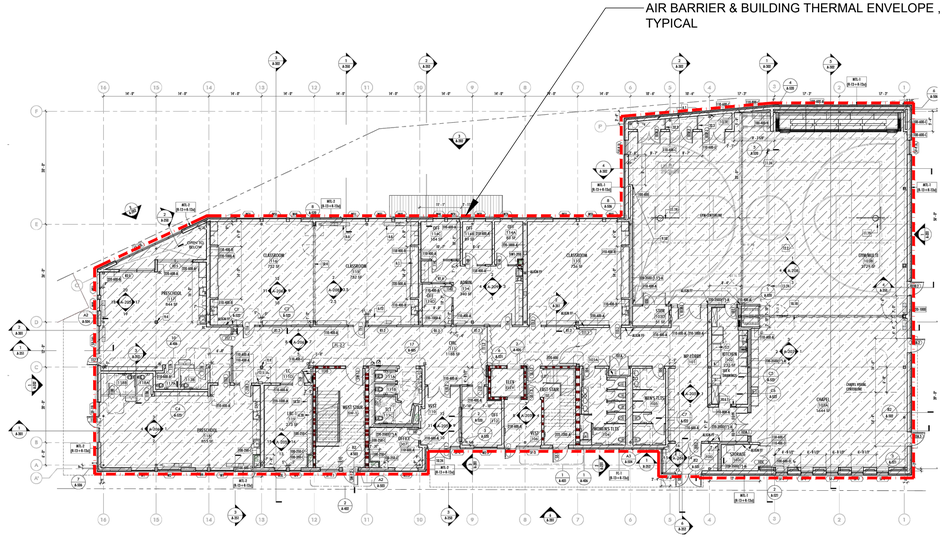

LEVEL 01 FLOOR PLAN
SCALE: NTS
REFERENCE ARCH: 1/A-101

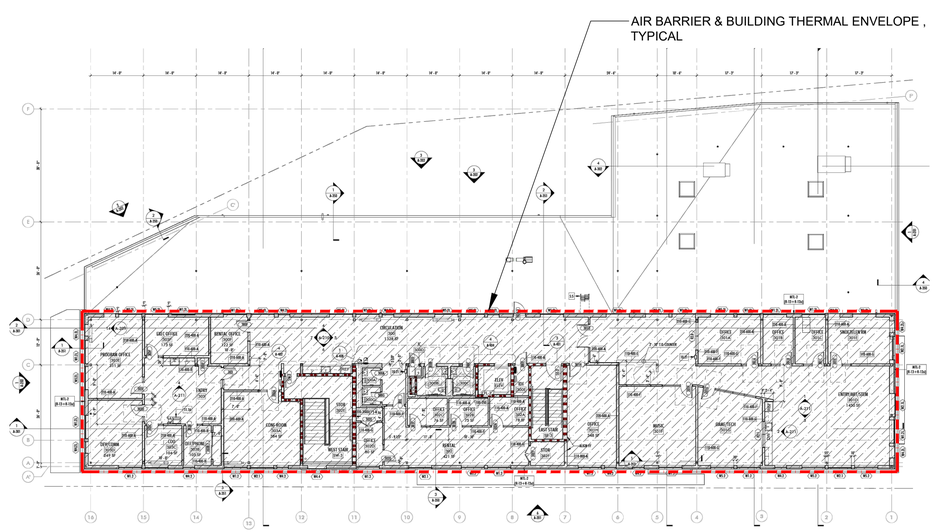

LEVEL 03 FLOOR PLAN
SCALE: NTS
REFERENCE ARCH: 1/A-103

PLAN VIEWS WERE TAKEN FROM ARCHITECTURAL SET DATED 12.03.2025 , THEY ARE DIAGRAMMATIC AND SHOULD NOT BE USED FOR MATERIAL TAKE-OFFS. FINAL BUILDING PLANS SHOULD BE VERIFIED.

N

BEE ENGINEERS
170 W DAYTON ST, SUITE 206
EDMONDS, WA 98020
PH: 425 672-3900
FAX: 425 712-8608

PATRICK McMAHON
STATE OF WASHINGTON
24029365
REGISTERED
PROFESSIONAL ENGINEER

BARNABIE POINT PROJECT
3700 E Mercer Way
Mercer Island, WA 98040

DATE	DESCRIPTION
01.02.2025	DESIGN DEVELOPMENT
06.04.2025	BUILDING PERMIT
08.20.2025	COORDINATION SET
10.22.2025	BP CORRECTIONS
12.15.2025	100% CD SET

PHASE:

4 JUNE 2025
BUILDING PERMIT

BEE PROJECT #: 2403-1017

P.E.: Patrick McMahon
P.M.: Patrick McMahon
ENERGY: Katya Bautista
DRAFTER: Denin Dazey

© COPYRIGHT BEE ENGINEERS

THESE DRAWINGS ARE FOR GENERAL ARRANGEMENT OF MATERIALS ON SITE CONDITIONS GOVERN. DO NOT SCALE DRAWINGS TO OBTAIN DIMENSIONS.

SHEET NAME:

AIR BARRIER DIAGRAMS

SHEET NUMBER:

BE801

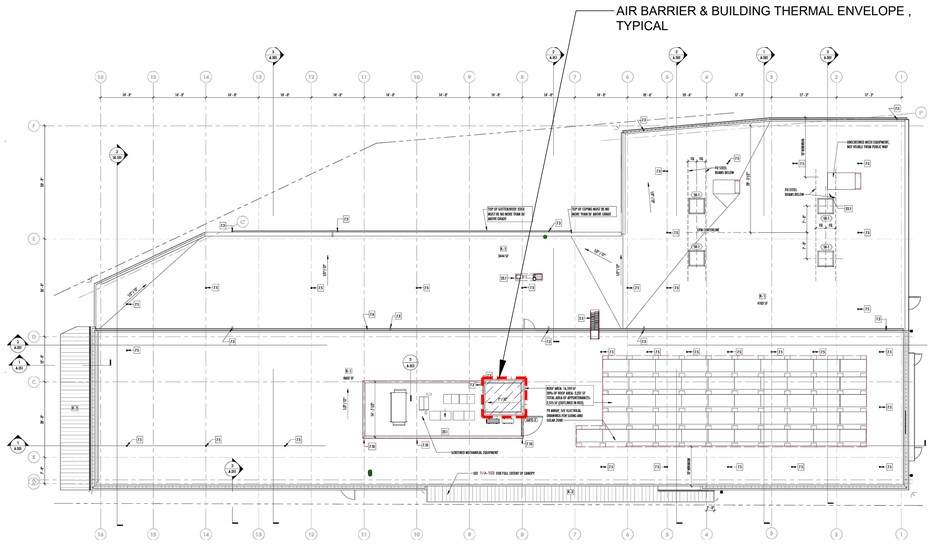

ROOF PLAN
SCALE: NTS
REFERENCE ARCH: 1/A-104

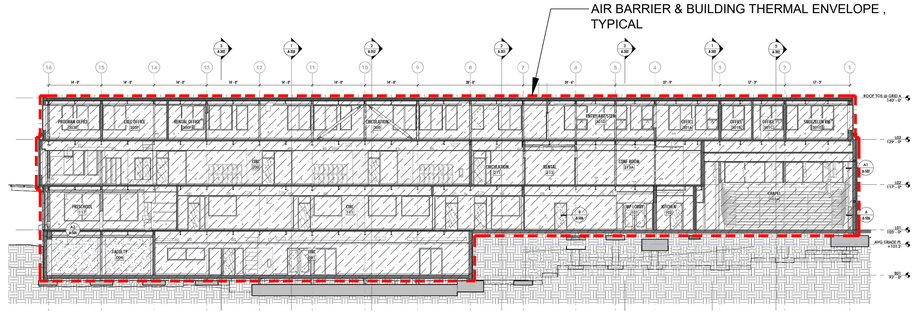

EAST-WEST SECTION THRU MULTIPURPOSE
SCALE: NTS
REFERENCE ARCH: 2/A-301

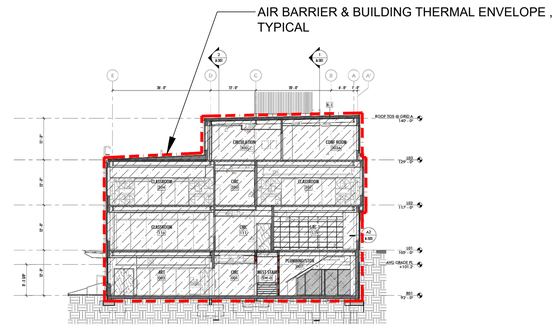

NORTH-SOUTH SECTION AT GRID 13
SCALE: NTS
REFERENCE ARCH: 3/A-302

PLAN VIEWS WERE TAKEN FROM ARCHITECTURAL SET DATED 12.03.2025 , THEY ARE DIAGRAMMATIC AND SHOULD NOT BE USED FOR MATERIAL TAKE-OFFS. FINAL BUILDING PLANS SHOULD BE VERIFIED.

N

BEE ENGINEERS
170 W DAYTON ST, SUITE 206
EDMONDS, WA 98020
PH: 425 672-3900
FAX: 425 712-8608

PATRICK McMAHON
STATE OF WASHINGTON
24029365
REGISTERED
PROFESSIONAL ENGINEER

BARNABIE POINT PROJECT
3700 E Mercer Way
Mercer Island, WA 98040

DATE	DESCRIPTION
01.02.2025	DESIGN DEVELOPMENT
06.04.2025	BUILDING PERMIT
08.20.2025	COORDINATION SET
10.22.2025	BP CORRECTIONS
12.15.2025	100% CD SET

PHASE:

4 JUNE 2025
BUILDING PERMIT

BEE PROJECT #: 2403-1017

P.E.: Patrick McMahon
P.M.: Patrick McMahon
ENERGY: Katya Bautista
DRAFTER: Denin Dazey

© COPYRIGHT BEE ENGINEERS

THESE DRAWINGS ARE FOR GENERAL ARRANGEMENT OF MATERIALS ON SITE CONDITIONS GOVERN. DO NOT SCALE DRAWINGS TO OBTAIN DIMENSIONS.

SHEET NAME:

AIR BARRIER DIAGRAMS

SHEET NUMBER:

BE802

2021 Washington State Energy Code, Commercial Provision.

1. **C401.2 Compliance path.**
The building will comply with the Total Building Performance path and requirements of Section C407. Energy forms are located on BE900-BE903 drawings and provided to show that the proposed Total UA of the proposed building is no more than 20 percent higher than the Allowed Total UA as defined in Section C402.1.5 and according to Section C407.3.1 Limits on non-mandatory measures.

2. **C301** Climate zone for energy compliance has been defined per Table C301.1.

3. **C303.1.1 Building thermal envelope insulation**.
An R-value identification mark shall be applied by the manufacturer to each piece of building thermal envelope insulation 12 inches (305 mm) or greater in width. Alternatively, the insulation installers shall provide a certification listing the type, manufacturer and R-value of insulation installed in each element of the building thermal envelope. For blown or sprayed insulation (fiberglass and cellulose), the initial installed thickness, settled thickness, settled R-value, installed density, coverage area and number of bags installed shall be listed on the certification. For sprayed polyurethane foam (SPF) insulation, the installed thickness of the areas covered and R-value of installed thickness shall be listed on the certification. For insulated siding, the R-value shall be labeled on the product's package and shall be listed on the certification. The insulation installer shall sign, date and post the certification in a conspicuous location on the job site.
   Exception: for roof insulation installed above the deck, the R-value shall be labeled as required by the material standards specified in table 1508.2 of the International Building Code.

4. **C303.1.2 Insulation mark installation.**
Insulating materials shall be installed such that the Manufacturer's R-value mark is readily observable upon inspection.

5. **C303.1.3 Fenestration product rating.**
U-factors of fenestration shall be determined as Follows:
   1) For windows, doors and skylights, U-factor ratings shall be determined in accordance with NFRC 100.
   2) Where required for garage doors and rolling doors, U-factor ratings shall be determined in Accordance with either NFRC 100 or ANSI/DASMA 105.

   U-factors shall be determined by an accredited, independent laboratory, and labeled and certified by the manufacturer.

   Products lacking such a labeled U-factor shall be assigned a default U-factor from table C303.1.3(1), C303.1.3(2) or C303.1.3(4). The solar heat gain coefficient (SHGC) and visible transmittance (VT) of glazed Fenestration products (windows, glazed doors and skylights) shall be determined in accordance with NFRC 200 by an accredited, independent laboratory, and labeled and certified by the manufacturer. Products lacking such a labeled SHGC or VT shall be assigned a default SHGC or VT from table C303.1.3(3).

6. **C403.4 HVAC system controls.**
HVAC systems shall be provided with controls in accordance with sections C403.4.1 through C403.4.12 and shall be capable of and configured to implement all required control functions in this code.

7. **C407.3 Performance-based compliance.**
Compliance with this section demonstrated in details in the Total Building Performance report which is a separate standalone document.

8. **C401.4 Thermal envelope certificate.**
A permanent thermal envelope certificate shall be completed by an approved party. Such certificate shall be posted on a wall in the space where the space conditioning equipment is located, a utility room or other approved location. If located on an electrical panel, the certificate shall not cover or obstruct the visibility of the circuit directory label, service disconnect label, or other required labels. A copy of the certificate shall also be included in the construction files for the project. The certificate shall include:

   1) R-values of insulation installed in or on ceilings, roofs, walls, foundations and slabs, crawlspace walls and floors, and ducts outside conditioned spaces.
   2) U-factors and solar heat gain coefficients (SHGC) of fenestration.
   3) Results from any building envelope air leakage testing per-formed on the building.Where there is more than one value for any component of the building envelope, the certificate shall indicate the area-weighted average value where available. If the area-weighted average is not available, the certificate shall list each value that applies to 10 percent or more of the total component area.

The following mandatory provisions indicated in the Table below should be met:

MANDATORY COMPLIANCE MEASURES FOR TOTAL BUILDING PERFORMANCE METHOD		
Section	Title	Comment
Envelope		
C402.5	Air Leakage	
Mechanical		
C403.1.2	Calculation of heating and cooling loads	
C403.1.3	Data centers	N/A
C403.2	System design	
C403.3.1	Equipment and system sizing	
C403.3.2	HVAC equipment performance requirements	
C403.3.3	Hot gas bypass limitation	
C403.3.4.4	Boiler turndown	
C403.4.1	Thermostatic controls	
C403.4.2	Off-hour controls	
C403.4.7	Combustion heating equipment controls	
C403.4.9	Group R-2 and R-3 dwelling units	
C403.4.11	Direct digital control systems	
C403.5.5	Economizer fault detection and diagnostics (FDD)	
C403.7	Ventilation and exhaust systems	Except for C403.7.6.2
C403.8	Fan and fan controls	
C403.9.1.1	Variable flow controls	
C403.10	Construction of HVAC elements	
C403.11	Mechanical systems located outside of the building thermal envelope	
Service Water Heating		
C404	Service Water Heating	Except for C404.2.1
Lighting and Electrical		
C405	Electrical power and lighting systems neral	
Other Requirements		
C407	Total Building Performance	
C408	System commissioning	
C409	Energy metering	
C410	Refrigeration requirements	
C411[b]	Renewable energy	
C412	Compressed air systems	

10. **C408 System commissioning (By Others).**
A building commissioning process led by a certified commissioning professional and functional testing requirements shall be completed for mechanical systems in section C403, service water heating systems in section C404, controlled receptacles and lighting systems in section C405, equipment, appliance and systems installed to comply with section C406 or C407; energy metering in section C409 and refrigeration in section C410.

11. **C409.2 Energy source metering.**
Buildings shall have a meter at each energy source. For each energy supply source listed in Section C409.2.1 through C409.2.4, meters shall collect data for the whole building or for each separately metered portion of the building where not exempted by the exception to Section C409.1.

12. **C411.1 On-site renewable energy.**
Each new building, or addition larger than 10,000 square feet of gross conditioned floor area, shall include a renewable energy generation system consisting of not less than 0.5 W/ft2 or 1.7 Btu/ft2 multiplied by the sum of the gross conditioned floor area

13. **C411.3 Solar readiness.**
A solar zone shall be provided on buildings that are 20 stories or less in height above grade plane. The solar zone shall be located on the roof of the building or on another structure elsewhere on the The solar zone shall be in accordance with this section and the International Fire Code.

14. **C412.1 Compressed air systems (Not Applicable).**
All new compressed air systems, and all additions or alterations of compressed air systems where the total combined horsepower (hp) of the compressor(s) is 25 hp or more, shall meet the requirements of this section. These requirements apply to the compressors, related piping systems, and related controls that provide compressed air and do not apply to any equipment or controls that use or process the compressed air.

Thermal Envelope Certificate (per C401.4)

Name of Builder / Designer:	
Energy Code Version:	
Permit Date:	
Permit Number:	

Insulation Rating				
Component		**R-Value**	**%** of component	**R-Value** (area-weighted average)
Ceiling / Roof				
Walls				
Floors / Slabs				

Fenestration Rating				
Type	**U-Factor**	**SHGC**	**U-Factor** (area-weighted average)	**SHGC** (area-weighted average)
Fixed				
Operable				
Entrance doors				
Opaque doors				N/A
Skylights				N/A

Air Leakage Test	
Result	

Additional notes

BEE ENGINEERS
170 W DAYTON ST, SUITE 206
EDMONDS, WA 98020
PH: 425 672-3900
FAX: 425 712-8608

PATRICK McMAHON — STATE OF WASHINGTON — 19535 — REGISTERED PROFESSIONAL ENGINEER

BARNABIE POINT PROJECT
3700 E Mercer Way
Mercer Island, WA 98040

	DATE	DESCRIPTION
	01.02.2025	DESIGN DEVELOPMENT
	06.04.2025	BUILDING PERMIT
	08.20.2025	COORDINATION SET
	10.22.2025	BP CORRECTIONS
	12.15.2025	100% CD SET

PHASE:

4 JUNE 2025
BUILDING PERMIT

BEE PROJECT #: 2403-1017

P.E.: Patrick McMahon
P.M.: Patrick McMahon
ENERGY: Katya Bautista
DRAFTER: Denin Dazey

© COPYRIGHT BEE ENGINEERS

THESE DRAWINGS ARE FOR GENERAL ARRANGEMENT OF MATERIALS ON SITE CONDITIONS GOVERN. DO NOT SCALE DRAWINGS TO OBTAIN DIMENSIONS.

SHEET NAME:

ENERGY CODE NOTES

SHEET NUMBER:

BE900

ENVELOPE COMPLIANCE SUMMARY

2021 WSEC Compliance Forms for Commercial Buildings including Group R2, R3 & R4 over 3 stories and all R1 — Administered by: ©2025 NEEA, All rights reserved

Project & Applicant Information	**Project Title**	BARNABIE POINT K-8 - 2021 WSEC	For Building Department Use: **Date: Dec 11, 2025**
	Project Address	3700 E MERCER WAY Mercer Island, WA 98040	
	Applicant Name	Pavlo Serdechnyi	
	Applicant Phone	425-678-1736	
	Applicant Email	pavlo@bee-engineers.com	

For questions about this report, contact WSEC Commercial Technical Support at 360-539-5300 or via email at com.techsupport@wsenergycodes.com

General Occupancy	All Commercial	**General Building Use Type(s)**	Education, Other	**Building Cond. Floor Area**	43,316
Project Scope	New Building	**Space Conditioning Categories**	Fully Conditioned	**Project Cond. Floor Area**	43,316
				Floors Above Grade	3
				Compliance Method	General Prescriptive
Envelope Project Description	CONSTRUCTION OF A 3-STORY SCHOOL AND OFFICE BUILDING.				

Envelope Compliance Scope and Method	Scope	Space Conditioning Category	Compliance Method	WWR/SRR per Category	UA Calculation Adjustment	Fenestration Alternates	Compliance Verification
	New Building	Fully Conditioned	Component performance	28.36% / 0.35%	None selected	No alternates selected	**COMPLIES**

Additional Energy Efficiency (AEC) Measures Included	No envelope or miscellaneous additional energy efficiency measures included in project	**Load Management (LDM) Measures Included**	No envelope or miscellaneous load management measures included in project
Air Barrier Testing	Standard building thermal envelope test	**Air Barrier Comments**	

Project Title	BARNABIE POINT K-8 - 2021 WSEC			Date	Dec 11, 2025
Scope & Space Conditioning	**NEW BUILDING - FULLY CONDITIONED**			**Compliance Verification**	**COMPLIES**
Window-to-wall Ratio	28.36%	**Skylight-to-roof-ratio**	0.35%	**Vertical Fenestration Alternate**	No alternates selected

Opaque Envelope Assemblies

Roof/Ceiling	Location in Documents	Assembly ID	Assembly Location	Insulation R-Values: Cavity	Continuous (% penetration)	2nd Layer (MB Roof)	U-Factor	Net Area (SF)
Insulation entirely above deck	A-008	R1 / Levels 2, 3, Roof	Exterior		R-38 (<0.04%)		U-0.025	16,701
	Sloped Roof & Tapered Insulation: Not sloped			U-Factor Source: WSEC Appendix A Default				
	U-Factor Source Description: A102.1							
Attic and other	Anch	Vestibule / Level 1	Exterior	R-20	R-30 (<0.04%)		U-0.020	74
	U-Factor Source: WSEC Appendix A Default			U-Factor Source Description: Table A101.5				
	Roof Framing Type: Standard			Roof Framing Depth (Inches): 2x12				
	Roof Framing Spacing (OC): 16 o.c.			Roof Framing Material: Steel-framed				
	Ceiling/Attic Venting: Unvented							

Walls	Location in Documents	Assembly ID	Assembly Location	Cavity	Continuous (% penetration)	Insulated Wall Furring	U-Factor	Net Area (SF)
Steel-framed - Commercial	A-008	MTL-1, MTL-2, FC-1 / Levels B01, 1-3, Roof	Exterior	R-21	R-12.5 (< 0.04%)		U-0.046	15,092
	U-Factor Source: WSEC Appendix A Default			U-Factor Source Description: Table A103.3.6.1(1)				
	Framing Depth: 2x6			Other Framing Depth:				
	Framing Spacing (OC): 16 o.c.							
Mass (precast concrete) - Commercial	A-008	CONC-2 / Level B01	Exterior & above grade		R-15 (< 0.04%)	No	U-0.061	269
	Does assembly include insulated wall furring?: No			Other Framing Depth:				
	Framing Spacing (OC):			U-Factor Source: WSEC Appendix A Default				
	U-Factor Source Description: Table A103.3.7.1(2)							
Mass (precast concrete) - Commercial	S/A-404	Elevator Pit	Wall is below grade		R-10 (< 0.04%)	No	U-0.080	193
	Does assembly include insulated wall furring?: No			Other Framing Depth:				
	Framing Spacing (OC):			U-Factor Source: WSEC Appendix A Default				
	U-Factor Source Description: Table 101.5							
Mass (precast concrete) - Commercial	A-008	CONC-1 / Level B01	Wall is below grade		R-10 (< 0.04%)	No	U-0.080	3,043
	Does assembly include insulated wall furring?: No			Other Framing Depth:				
	Framing Spacing (OC):			U-Factor Source: WSEC Appendix A Default				
	U-Factor Source Description: Table 101.5							

Floors and Edges	Location in Documents	Assembly ID	Assembly Location	Cavity	Continuous (% penetration)		U-Factor	Net Area (SF)
Steel-framing/joist	1/A-352	SOF-1 / Levels 2, 3	Exterior	R-38	R-10 (< 0.04%)		U-0.044	573
	U-Factor Source: WSEC Appendix A Default			U-Factor Source Description: Table 101.5				
	Framing Depth: 2x12			Other Framing Depth:				
	Framing Spacing (OC): 16" o.c.							
Mass transfer deck slab	Anch	Transfer / Levels 2, 3	Exterior		()		U-0.741	229
	U-Factor Source: WSEC Table A103.3.7.2			U-Factor Source Description: Table 103.3.7.2(1)				
	Wall Thickness Above/Below Floor: 6-inch							
Intermediate mass floor edge - Commercial	Anch	Slab Edge / Levels 1-3	Exterior & above grade		R-10 (< 0.04%)		U-0.088	374
	U-Factor Source: WSEC Appendix A Default			U-Factor Source Description: Table 103.3.7.2(1)				
	Wall Thickness Above/Below Floor: 6-inch							

Slab-on-grade Floors	Location in Documents	Assembly ID	Assembly Location	Slab Edge	Under Slab		F-Factor	Perimeter Length (SF)
Unheated slab	Anch	FL-1 / Levels 1, B01	At grade level	R-10	R-0		F-0.54	421
	Slab Insulation Method: 2 ft horizontal (no slab edge insulation)			F-Factor Source: WSEC Appendix A Default				
	F-Factor Source Description: Table A106.1							

Fenestration & Opaque Door Assemblies

Opaque Doors	Location in Documents	Assembly ID	Assembly Location	Insulation R-Values: Door Insulation			U-Factor	Rough Opening (SF)
Swinging	A-602	SE-1.1, SW-1.3, 0028.2, 103B.3	Exterior				U-0.37	102
	What percentage of this opaque door is glazing?: 50% or less			U-Factor Source: WSEC Appendix A Default				
	U-Factor Source Description: Table A107.1(1)			Is this a public entrance door?: No				

Vertical Fenestration	Location in Documents	Assembly ID	Assembly Location		Shading (PF)	Fenestration SHGC	Fenestration U-Factor	Rough Opening (SF)
Fixed - Class AW or site built	A-603	Storefronts: SF-1-SF-7, SF-8L-SF15L	Exterior		PF < 0.2	SHGC-0.38	U-0.34	1,814
	U-Factor & SHGC Source: NFRC Rating			U-Factor Source Description: NFRC Certified				
Fixed - All other types	A-602	W4, W4.1L, W4.2, W4.2L, W4.3, W4.4, W4L, W5L, W5.1L, W5.2L, W5.3	Exterior		PF < 0.2	SHGC-0.38	U-0.26	1,742
	U-Factor & SHGC Source: NFRC Rating			U-Factor Source Description: NFRC Certified				
Operable - All other types	A-602	W1, W1L, W1.1L, W1.2, W1.2L, W1.3, W1.4L, W2, W2L, W2.1, W2.1L, W2.2, W3.2L, W2.3, W3L, W6.1L	Exterior		PF < 0.2	SHGC-0.33	U-0.28	2,443
	U-Factor & SHGC Source: NFRC Rating			U-Factor Source Description: NFRC Certified				

Glazed Doors	Location in Documents	Assembly ID	Assembly Location		Shading (PF)	Fenestration SHGC	Fenestration U-Factor	Rough Opening (SF)
Swinging entrance door	A-602	Metal entrance door: 002.2, 003.2, 100.1, 106, 110.1, 117.2, 118.3, 103A.2, 103A.3, 103B.2	Exterior		PF < 0.2	SHGC-0.33	U-0.60	271
	U-Factor & SHGC Source: NFRC Rating			U-Factor Source Description: NFRC Certified				
	Is this a public entrance door?: No							

Skylights	Location in Documents	Assembly ID	Assembly Location			Fenestration SHGC	Fenestration U-Factor	Rough Opening (SF)
All types	A-602	Skylights: SK-1	Exterior			SHGC-0.28	U-0.48	59
	U-Factor & SHGC Source: NFRC Rating			U-Factor Source Description: CPD 00491-00001				

Project Title	BARNABIE POINT K-8 - 2021 WSEC			Date	Dec 11, 2025
U x A Calculation	**NEW BUILDING - FULLY CONDITIONED**			**COMPLIES**	
Opaque Envelope Assemblies				**PROPOSED**	**TARGET**
Roof/Ceiling	**Assembly ID**	**Roof/Ceiling Assembly U-Factor**	**Net Area (SF)**	**U x A**	**Roof/Ceiling Assembly U-Factor**	**Net Area (SF)**	**U x A**
Insulation entirely above deck	R1 / Levels 2, 3, Roof	0.025	16,701.0	417.5	0.027	16,701.0 (1)	450.9
Attic and other	Vestibule / Level 1	0.020	74.0	1.5	0.021	74.0 (1)	1.6
Walls	**Assembly ID**	**Wall Assembly U-factor**	**Net Area (SF)**	**U x A**	**Wall Assembly U-factor**	**Net Area (SF)**	**U x A**
Steel-framed - Commercial	MTL-1, MTL-2, FC-1 / Levels B01, 1-3, Roof	0.046	15,092.0	694.2	0.055	15,092.0 (1)	830.1
Mass (precast concrete) - Commercial	CONC-2 / Level B01	0.061	269.0	16.4	0.104	269.0 (1)	28.0
Mass (precast concrete) - Commercial	Elevator Pit	0.080	193.0	15.4	0.104	193.0 (1)	20.1
Mass (precast concrete) - Commercial	CONC-1 / Level B01	0.080	3,043.0	243.4	0.104	3,043.0 (1)	316.5
Floors and Edges	**Assembly ID**	**Floor Assembly U-Factor**	**Net Area (SF)**	**U x A**	**Floor Assembly U-Factor**	**Net Area (SF)**	**U x A**
Steel-framing/joist	SOF-1 / Levels 2, 3	0.044	573.0	25.2	0.029	573.0 (1)	16.6
Mass transfer deck slab	Transfer / Levels 2, 3	0.741	229.0	169.7	0.20	229.0 (1)	45.8
Intermediate mass floor edge - Commercial	Slab Edge / Levels 1-3	0.088	374.0	32.9	0.104	374.0 (1)	38.9
Slab on Grade Floors				**PROPOSED**			**TARGET**
Slab-on-grade Floors	**Assembly ID**	**F-Factor**	**Perimeter Length (LF)**	**U x A**	**F-Factor**	**Perimeter Length (LF)**	**U x A**
Unheated slab	FL-1 / Levels 1, B01	0.54	421.0	227.3	0.54	421.0 (1)	227.3
Fenestration Assemblies				**PROPOSED**			**TARGET**
Opaque Doors	**Assembly ID**	**Door Assembly U-Factor**	**Assembly Rough Opening (SF)**	**U x A**	**Door Assembly U-Factor**	**Assembly Rough Opening (SF)**	**U x A**
Swinging	SE-1.1, SW-1.3, 0028.2, 103B.3	0.37	102.0	37.7	0.37	102.0 (1)	37.7
Vertical Fenestration	**Assembly ID**	**Fenestration U-Factor**	**Assembly Rough Opening (SF)**	**U x A**	**Fenestration U-Factor**	**Assembly Rough Opening (SF)**	**U x A**
Fixed - Class AW or site built	Storefronts: SF-1-SF-7, SF-8L-SF15L	0.34	1,814.0	616.8	0.34	1,814.0 (1)	616.8
Fixed - All other types	W4, W4.1L, W4.2, W4.2L, W4.3, W4.4, W4L, W5L, W5.1L, W5.2L, W5.3	0.26	1,742.0	452.9	0.26	1,742.0 (1)	452.9
Operable - All other types	W1, W1L, W1.1L, W1.2, W1.2L, W1.3, W1.4L, W2, W2L, W2.1, W2.1L, W2.2, W2.2L, W2.3, W3L, W6.1L	0.28	2,443.0	684.0	0.28	2,443.0 (1)	684.0
Glazed Doors	**Assembly ID**	**Glazed Door U-Factor**	**Assembly Rough Opening (SF)**	**U x A**	**Glazed Door U-Factor**	**Assembly Rough Opening (SF)**	**U x A**
Swinging entrance door	Metal entrance door: 002.2, 003.2, 100.1, 106, 110.1, 117.2, 118.3, 103A.2, 103A.3, 103B.2	0.60	271.0	162.6	0.60	271.0 (1)	162.6
Skylights	**Assembly ID**	**Skylight U-Factor**	**Assembly Rough Opening (SF)**	**U x A**	**Skylight U-Factor**	**Assembly Rough Opening (SF)**	**U x A**
All types	Skylights: SK-1	0.48	59.0	28.3	0.50	59.0 (1)	29.5
	Proposed Area	**Proposed UxA**			**Target Area**	**Target UxA**	
Project Totals	**43,400**	**3,826**			**43,400**	**3,959**	

Project Title	BARNABIE POINT K-8 - 2021 WSEC			Date	Dec 11, 2025
SHGC x A Calculation	**NEW BUILDING - FULLY CONDITIONED**			**COMPLIES**	
Fenestration Assemblies				**PROPOSED**	**TARGET**
Glazed Doors	**Assembly ID**	**PF**	**Glazed Door SHGC**	**Assembly Rough Opening (SF)**	**SHGC x A**	**Glazed Door SHGC**	**Assembly Rough Opening (SF)**	**SHGC x A**
Swinging entrance door	Metal entrance door: 002.2, 003.2, 100.1, 106, 110.1, 117.2, 118.3, 103A.2, 103A.3, 103B.2	PF < 0.2	0.33	271.0	89.4	0.33	271.0 (1)	89.4
Horizontal	**Assembly ID**	**PF**	**Skylight SHGC**	**Assembly Rough Opening (SF)**	**SHGC x A**	**Skylight SHGC**	**Assembly Rough Opening (SF)**	**SHGC x A**
Skylights	Skylights: SK-1		0.28	59.0	16.5	0.35	59.0 (1)	20.7
Vertical Fenestration	**Assembly ID**	**PF**	**Fenestration SHGC**	**Assembly Rough Opening (SF)**	**SHGC x A**	**Fenestration SHGC**	**Assembly Rough Opening (SF)**	**SHGC x A**
Fixed - Class AW or site built	Storefronts: SF-1-SF-7, SF-8L-SF15L	PF < 0.2	0.38	1,814.0	689.3	0.38	1,814.0 (1)	689.3
Fixed - All other types	W4, W4.1L, W4.2, W4.2L, W4.3, W4.4, W4L, W5L, W5.1L, W5.2L, W5.3	PF < 0.2	0.38	1,742.0	662.0	0.38	1,742.0 (1)	662.0
Operable - All other types	W1, W1L, W1.1L, W1.2, W1.2L, W1.3, W1.4L, W2, W2L, W2.1, W2.1L, W2.2, W2.2L, W2.3, W3L, W6.1L	PF < 0.2	0.33	2,443.0	806.2	0.33	2,443.0 (1)	806.2
	Proposed Area	**Proposed SHGC x A**			**Target Area**	**Target SHGC x A**		
Project Totals	**6,329**	**2,263**			**6,329**	**2,268**		

C411 ON-SITE RENEWABLE ENERGY SYSTEM SIZING.
Barnabie Point K-8

21658.00 Watts rated peak photovoltaic energy production required

Conditioned area of the building.

Total 43316 square feet of conditioned space

Oleksandr Holubenko, BEE Engineers 170 W. Dayton St., Suite 206, Edmonds, WA 98020 E: oleksandr@bee-engineers.com	12/11/2025

Solar Resource Data:	The National Solar Radiation Database (NSRDB)
Module Type:	Standard
Cell Material:	Crystalline, Silicon
Nominal Efficiency (Approx.):	15%
Module Cover:	Glass
Temperature Coefficient:	-0.47%/°C
Array Type:	Fixed
System Losses (Approx.):	14%
DC System Size, kW:	21.7

Average Nominal Power of PV Panel, W:	400
Estimated PV panel area, sq. ft:	22.2
Estimated PV panels quantity:	55
Approximate PV panels total area, sq. ft*:	1230

*Total area might vary depending on the nominal power of a particular PV panel.

Building Envelope Requirements List, pg 1 of 13

2021 WSEC Requirements for Commercial Buildings including Group R2, R3 & R4 over 3 stories & all R1 -- Administered by ©2025 NEEA, All rights reserved
The following information is necessary to check a building permit application for compliance with the building envelope requirements in the Washington State Energy Code, Commercial Provisions.
For questions about this report, contact WSEC Commercial Technical Support at 360-539-5300 or via email at com.techsupport@wsenergycodes.com

Project:
BARNABIE POINT K-8 - 2021 WSEC
3700 E MERCER WAY
Mercer Island, WA 98040

Date: 2025-11-03

Applies	Code Section	Component	Compliance Information Required In Permit Documentation	Location in Documents	Building Department Notes
SCOPE					
NA	C103	Construction documents - General	For a tenant space (first build-out) project, indicate if there is no envelope scope included in the project.		
NA	C103	Construction documents - General	For an alteration project, indicate if there is no envelope scope included in the project.		
NA	C402.1.1.1	Low energy spaces	Identify low energy enclosed spaces on plans; include calculations if applicable that demonstrate eligibility for envelope provisions exemption.		
NA	C402.1.1.2	Semi-heated spaces	Identify semi-heated spaces on plans, include mechanical heating system type and capacity calculations that demonstrate eligibility for wall insulation exemption.		
NA	C402.1.1.3	Greenhouse spaces	Identify greenhouse spaces on plans; include vertical fenestration and glazed roof / skylight assembly information and mechanical heating system type if applicable, that demonstrates eligibility for envelope provisions exemption.		
NA	C402.1.2	Equipment buildings	Provide building sf area, average wall and roof U-factor, installed electric equipment power (W/sf); mechanical equipment type and capacity (btu/h*sf) and heating setpoint restriction (≤ 50$_{0}$F) to demonstrate eligibility for envelope provisions exempt		
NA	C402.1.2.1	Standalone elevator hoistways	Identify elevator hoistway on plans and indicate it does not serve or open into conditioned or semi-heated space; indicate dedicated HVAC system includes heating and cooling setpoints restrictions (≤ 40$_{0}$F and ≥ 95$_{0}$F, respectively) to demonstrate		
NA	C410.3	Walk-in cooler and freezer spaces	Identify locations and floor area of each walk-in cooler and freezer space on plans; including site assembled, site constructed and prefabricated units.		
NA			Identify locations and floor sf area of warehouse cooler and freezer spaces on plans.		
NA	C101.4.1	Mixed residential & commercial building	Identify spaces with different occupancy requirements on plans.		
NA	C502.1	Building additions	Indicate whether the building addition complies as a stand-alone project or if the addition and the existing building is combined into a single building to demonstrate compliance.		

Building Envelope Requirements List, pg 2 of 13

2021 WSEC Requirements for Commercial Buildings including Group R2, R3 & R4 over 3 stories & all R1 -- Administered by ©2025 NEEA, All rights reserved
The following information is necessary to check a building permit application for compliance with the building envelope requirements in the Washington State Energy Code, Commercial Provisions.
For questions about this report, contact WSEC Commercial Technical Support at 360-539-5300 or via email at com.techsupport@wsenergycodes.com

NA	C505.2	Change in space conditioning alterations	Identify on plans existing unconditioned spaces changing to semi-heated or conditioned space, and existing semi-heated spaces changing to conditioned space; provide load calculations per Section C501.2.2 for new and existing to remain (if applicable) mech		
NA	C505.1	Change in space conditioning alterations	Indicate whether the area under-going a change in space conditioning complies as a stand-alone project or if the alteration area is combined with all existing equivalent space conditioning areas in the building to demonstrate compliance.		
NA	C505.3	Change in occupancy alterations	Identify on plans existing F, S and U-occupancy spaces undergoing a change in occupancy and final occupancy type.		
NA			Identify on plans existing Group R spaces permitted prior to July 1, 2002 that are undergoing a change to a commercial occupancy.		
NA			Identify on plans existing commercial (non-Group R) occupancy spaces undergoing a change to a Group R occupancy.		
NA	C505.1	Change in occupancy alterations	Indicate whether the area under-going a change in occupancy complies as a stand-alone project or if the alteration area is combined with all existing equivalent occupancy areas in the building (as defined per Section C505.3) to demonstrate compliance.		
ENVELOPE ASSEMBLIES					
YES	C103.6.3	Thermal envelope compliance path	Indicate envelope thermal performance compliance path taken (prescriptive or component performance) and provide corresponding WSEC envelope compliance reports in project documentation	BE900	
NA			If complying prescriptively, demonstrate that each opaque envelope assembly complies via either the minimum prescriptive R-value per Table C402.1.3 or the maximum prescriptive U-factor/F-factor per Table C402.1.4; include U-factor/F-factor source in compl		
NA			If complying via component performance, demonstrate that the Proposed Total UxA is equal to or less than the Allowable Total UxA; also demonstrate that the Proposed Total SHGCxA is equal to or less than the Allowable SHGCxA.		
YES			If complying via total building performance, provide a list of all proposed envelope component types, areas and U-values in energy model documentation.	BE900	

BEE ENGINEERS
170 W DAYTON ST, SUITE 206
EDMONDS, WA 98020
PH: 425 672-3900
FAX: 425 712-8608

PATRICK McMAHON — STATE OF WASHINGTON — 19025865 — REGISTERED PROFESSIONAL ENGINEER

BARNABIE POINT PROJECT
3700 E Mercer Way
Mercer Island, WA 98040

	DATE	DESCRIPTION
	01.02.2025	DESIGN DEVELOPMENT
	06.04.2025	BUILDING PERMIT
	08.20.2025	COORDINATION SET
	10.22.2025	BP CORRECTIONS
	12.15.2025	100% CD SET

PHASE:

4 JUNE 2025
BUILDING PERMIT

BEE PROJECT #: 2403-1017

P.E.: Patrick McMahon
P.M.: Patrick McMahon
ENERGY: Katya Baulista
DRAFTER: Denin Dazey

© COPYRIGHT BEE ENGINEERS

THESE DRAWINGS ARE FOR GENERAL ARRANGEMENT OF MATERIALS ON SITE CONDITIONS GOVERN. DO NOT SCALE DRAWINGS TO OBTAIN DIMENSIONS.

SHEET NAME:

BUILDING ENVELOPE ENERGY FORMS

SHEET NUMBER:

BE901

Building Envelope Requirements List, pg 3 of 13

2021 WSEC Requirements for Commercial Buildings including Group R2, R3 & R4 over 3 stories & all R1 -- Administered by ©2025 NEEA, All rights reserved
The following information is necessary to check a building permit application for compliance with the building envelope requirements in the Washington State Energy Code, Commercial Provisions.
For questions about this report, contact WSEC Commercial Technical Support at 360-539-5300 or via email at com.techsupport@waenergycodes.com

YES	C303.1.1	General insulation installation	Indicate installation methods, thicknesses, densities and clearances to achieve the intended R-value of all insulation materials	A-008, BE901	
NA			Where two or more layers of rigid insulation will be used, indicate that edge joints between layers are staggered, or exception taken.		
YES	C303.1.1 C303.1.2	Insulation identification	For insulation materials that are provided with a manufacturer's R-value identification mark, indicate that the insulation shall be installed such that the mark is readily observable during inspection.	A-008, BE900	
NA	C303.1.1 C303.1.2	Insulation identification	For insulation materials that are not installed with an R-value identification mark, indicate that an insulation certificate per Section C303.1.1 shall be provided immediately after installation in a conspicuous location in the building so it is readily a		
YES	C303.1.3 C402.4.3	Fenestration product rating	Indicate fenestration products shall be labeled with NFRC U-factor, SHGC, VT and leakage rating, if fenestration products do not have an NFRC rating, indicate applicable Chapter 3 default values.	A-602, A-603, BE900s	
YES	C103.2 C402.2.1	Roof assembly insulation	Indicate R-value(s) of cavity and / or continuous insulation on roof sections and WSEC envelope compliance reports	A-008, BE901	
NA			Where insulation thickness varies by greater than 1 inch, provide area weighted average U-factor calculation		
YES			Indicate framing materials and framing depths on roof sections.	A-008, BE901	
NA			For ceilings below vented attics and vaulted ceilings, indicate framing method (standard or advanced) per Section A102.2.		
NA			For roof assemblies with insulation entirely above deck that is tapered, indicate effective U-factors of tapered insulation per Section A102.2.6; include roof configuration and slope, maximum R-value at peak and minimum R-value at low point for all roof s		
NA			For metal building roofs, indicate R-values for thermal spacers and each insulation layer, and liner system (LS) method.		
NA	C402.2.1.3	Skylight curb insulation	Indicate skylight curb insulation R-value on roof section, if not included in skylight NFRC rating.		
NA	C402.2.1.4	Rooftop HVAC equipment curbs	Indicate rooftop HVAC equipment curb insulation R-value on roof section.		
YES	C103.2 C402.2.2 C402.2.5	Above/below grade wall assembly insulation	Indicate R-value(s) of cavity and / or continuous insulation on wall sections and WSEC envelope compliance reports	A-008, BE901	

Building Envelope Requirements List, pg 4 of 13

2021 WSEC Requirements for Commercial Buildings including Group R2, R3 & R4 over 3 stories & all R1 -- Administered by ©2025 NEEA, All rights reserved
The following information is necessary to check a building permit application for compliance with the building envelope requirements in the Washington State Energy Code, Commercial Provisions.
For questions about this report, contact WSEC Commercial Technical Support at 360-539-5300 or via email at com.techsupport@waenergycodes.com

YES			For mass walls, indicate material density category, wall thickness, weight and heat capacity.	A-008, BE901	
NA			For integral insulated ASTM C90 concrete masonry walls eligible for wall insulation exception, indicate loose-fill core insulation material and percentage of cores filled including grouted cores, bond beams, vertical fills, headers and any other grouted c		
YES			For wall assemblies that include wall furring, indicate the framing materials and framing depths on wall sections.	A-350-A-352, BE901	
NA			For exposed exterior basement / crawlspace walls, indicate method of protection of insulation.		
NA			For wood-framed wall assemblies, indicate on plans the framing depth and method (standard, intermediate or advanced) per Section A103.2.		
YES	C103.2 C402.2.2 C402.2.5	Above grade wall assembly insulation	For steel-framed and metal building wall assemblies, indicate framing depth on plans.	A-008, BE901	
NA	C402.1.4.3 Table C402.1.4 Foot	Thermal resistance of mechanical equipment penetrations	Where mechanical systems include through-wall penetrations, indicate penetration locations on plans and provide calculation of the total percent sf area of mechanical penetrations		
NA	C402.1.4.3 Table C402.1.4 Foot	Thermal resistance of mechanical equipment penetrations	If total sf area of through-wall penetrations exceeds 1% of the above grade wall area, the proposed wall assembly U-factor shall be calculated by area-weighting the proposed wall assembly type U-factor with a default U-factor of U-0.50 for the mechanical		
NA	Table C402.1.3 Footnote h Tabl	Peripheral edges of intermediate concrete floors[i]½	Indicate that the total sf area of the peripheral edges of intermediate concrete floors (slab thickness multiplied by perimeter length) is accounted for as a separate above grade mass wall assembly for prescriptive or component performance compliance: ref		
YES	C103.2 C402.4.4	Opaque doors	For solid opaque doors and doors with ≤ 50% integral glazed area, indicate rated U-factor for swinging (per NFRC-100) and non-swinging doors on wall sections or in door schedules, and WSEC envelope compliance reports.	A-602, BE901	
NA	C103.2 C402.4.4	Garage doors	Indicate rated U-factor for opaque sectional, roll-up, tilt-up, metal coiling and sliding garage doors on wall sections or in door schedules, and WSEC envelope compliance reports.		

Building Envelope Requirements List, pg 5 of 13

2021 WSEC Requirements for Commercial Buildings including Group R2, R3 & R4 over 3 stories & all R1 -- Administered by ©2025 NEEA, All rights reserved
The following information is necessary to check a building permit application for compliance with the building envelope requirements in the Washington State Energy Code, Commercial Provisions.
For questions about this report, contact WSEC Commercial Technical Support at 360-539-5300 or via email at com.techsupport@waenergycodes.com

NA	C103.2 C303.1.3 C402.4.4 Tabl	Garage doors	For garage doors with ≤ 50% integral glazed area, indicate glazing configuration (single or multiple row), percentage of glazed area and rated U-factor (per NFRC 100, ANSI/DASMA 105 or eligibility for exception) on wall sections or in door schedules, an		
YES	C103.2 C402.2.3	Floor assembly (over outdoor or unconditioned space) insulation	Indicate R-value(s) of cavity and/or continuous insulation on floor sections and WSEC envelope compliance reports	A-008, BE901	
YES			For floor joists, indicate framing material and framing depth on floor sections.	A-352	
NA			For mass floors, indicate material density category, floor thickness, weight and heat capacity.		
NA	C402.2.8	Above-grade exterior concrete slabs	Indicate on plans the locations of all decks, balconies and other above-grade concrete slabs that penetrate the building thermal envelope; indicate the total sf area (slab thickness multiplied by the perimeter length) is accounted for as a separate above		
NA	C402.2.8	Above-grade exterior concrete slabs	For prescriptive compliance, indicate a minimum R-10 thermal break at all above-grade exterior concrete slab locations (or applicable exception); for component performance compliance, indicate code target U-factor for a mass wall and proposed U-factor as		
YES			Indicate R-value of continuous insulation on wall section or foundation detail and WSEC envelope compliance reports	A-008, BE901	
NA			Indicate method of protection of exposed exterior slab edge insulation		
YES			For un-heated slab-on-grade floors, to comply prescriptively indicate insulation extends down vertically and / or horizontally the required distance from top of slab; for component performance provide effective F-factor.	A-301, A-302, BE901	
NA			For heated slab-on-grade floors, to comply prescriptively indicate insulation extends down vertically from top of slab and then horizontally under the entire slab; for component performance provide effective F-factor for a heated slab.		
YES			Indicate on plans the locations and configuration of all mass transfer deck slabs; indicate the total sf area (slab thickness multiplied by the length of the edge condition) is accounted for as a separate above grade wall assembly; indicate compliance is	Arch, BE901	

Building Envelope Requirements List, pg 6 of 13

2021 WSEC Requirements for Commercial Buildings including Group R2, R3 & R4 over 3 stories & all R1 -- Administered by ©2025 NEEA, All rights reserved
The following information is necessary to check a building permit application for compliance with the building envelope requirements in the Washington State Energy Code, Commercial Provisions.
For questions about this report, contact WSEC Commercial Technical Support at 360-539-5300 or via email at com.techsupport@waenergycodes.com

NA	C402.2.6	Radiant heating system panels insulation	Indicate on plans the insulation R-value behind radiant panels, U-bend/headers and bottom surface of radiantly heated floors (other than heated slab-on-grade).		
YES	C402.4 C303.1.3	Vertical fenestration assembly performance factors	Indicate U-factors, SHGC and VT values in fenestration schedules and WSEC envelope compliance reports	A-602, A-603, BE901	
NA			Indicate if an area-weighted U-factor is used for multiple fenestration types within the same fenestration category per Table C402.4; provide area-weighted U-factor calculation		
YES			Indicate if U-factor, SHGC and VT values are NFRC or default; if default then specify frame type, glazing layers, gap width, low-e coatings, gas-fill.	A-602, A-603, BE901	
NA	C402.4.3.3	Dynamic glazing performance factors	Indicate U-factors, variable SHGCs and VT values for dynamic glazing products in fenestration schedules and WSEC envelope compliance reports; indicate automatic controls that modulate solar gain in multiple steps; dynamic glazing cannot be area-weighted w		
NA	C402.4.3	Permanent shading projection factor (PF)	For vertical fenestration shaded by building element overhangs or permanent external shading devices, provide projection factor calculations per Equation 4-6 for each fixed and operable vertical fenestration type with similar permanent shading geometry.		
NA	C402.2.9	Vertical fenestration intersection with opaque walls[i]½	For vertical fenestration within wall assemblies with continuous insulation (CI), indicate in wall sections that the exterior glazing layer and thermal break are aligned laterally within 2-inches of the CI layer.		
YES	C402.2.9	Vertical fenestration intersection with opaque walls[i]½	For vertical fenestration within wall assemblies without continuous insulation, indicate in wall sections that the exterior glazing layer and thermal break are aligned laterally within 2-inches of the exterior face of the outermost insulation layer.	Arch	
NA	C402.2.9	Vertical fenestration intersection with opaque walls[i]½	"For vertical fenestration that is inset from the exterior face of the opaque wall rough opening, indicate in wall sections that the exposed exterior portion of the rough opening is covered with a material with an R-value of at least R-3 (insulation, 1-1/		
YES	C402.4.1 C502.2.1	Vertical fenestration maximum area	For window-to-wall ratio (WWR) calculation, provide total net sf area of all above grade wall assemblies and total rough opening sf area of all vertical fenestration assemblies in the building; each space conditioning category in the building shall be cal	BE901	

Building Envelope Requirements List, pg 7 of 13

2021 WSEC Requirements for Commercial Buildings including Group R2, R3 & R4 over 3 stories & all R1 -- Administered by ©2025 NEEA, All rights reserved
The following information is necessary to check a building permit application for compliance with the building envelope requirements in the Washington State Energy Code, Commercial Provisions.
For questions about this report, contact WSEC Commercial Technical Support at 360-539-5300 or via email at com.techsupport@waenergycodes.com

NA	C402.4.1 C502.2.1	Vertical fenestration maximum area	If WWR exceeds the prescriptive maximum allowed, indicate alternate compliance method applied (component performance calculation with target area adjustment, vertical fenestration high performance prescriptive alternate, or both).		
NA	C402.1.5	Vertical fenestration maximum area	If component performance with target area adjustment (TAA) will be used to account for vertical fenestration area in excess of the prescriptive maximum allowed; include TAA calculation in WSEC envelope compliance reports.		
NA	C402.4.1.1 C402.4.1.1.1 C502.	Vertical fenestration prescriptive alternate - Optimized daylighting	Provide calculations that demonstrate at least 50% of the total conditioned floor area is within a daylight zone; demonstrate compliance for each space conditioning category in the building separately		
NA			Indicate in project plans that all lighting fixtures located within daylight zones shall be provided with daylight responsive controls per Section C405.2.4.1		
NA			Indicate that the visible transmittance (VT) of all vertical fenestration in the building is at least 1.1 times the required SHGC per Table C402.4 or no less than VT-0.50, whichever is greater.		
NA	C402.4.1.1 C402.4.1.1.2 C502.	Vertical fenestration prescriptive alternate - High performance fenestration	Indicate high performance U-factors and SHGC values in fenestration schedules and WSEC envelope compliance reports		
NA			Indicate if an area-weighted U-factor is used for multiple high performance fenestration elements within the same fenestration category per Table C402.4; provide area-weighted U-factor calculation.		
YES	C402.4 C303.1.3	Skylight (horizontal fenestration) assembly performance factors	Indicate U-factors, SHGC and VT values in fenestration schedules and WSEC envelope compliance reports; indicate if values are NFRC or default	A-602, BE901	
NA	C402.4.3.4	Skylight (horizontal fenestration) assembly performance factors	Indicate if an area-weighted U-factor is used for multiple skylight types; provide area-weighted U-factor calculation.		
YES	C402.4.1 C502.2.2	Skylight maximum area	For skylight-to-roof ratio (SRR) calculation, provide total net sf area of roof and total rough opening sf area of all skylight assemblies in the building; each space conditioning category in the building shall be calculated separately; include SRR in WSE	BE901	
NA	C402.4.1 C402.1.5 C502.2.2	Skylight maximum area	If SRR exceeds the prescriptive maximum allowed, indicate compliance method applied is component performance calculation with target area adjustment.		

Building Envelope Requirements List, pg 8 of 13

2021 WSEC Requirements for Commercial Buildings including Group R2, R3 & R4 over 3 stories & all R1 -- Administered by ©2025 NEEA, All rights reserved
The following information is necessary to check a building permit application for compliance with the building envelope requirements in the Washington State Energy Code, Commercial Provisions.
For questions about this report, contact WSEC Commercial Technical Support at 360-539-5300 or via email at com.techsupport@waenergycodes.com

NA	C402.1.5	Wall / vertical fenestration and roof / skylight target area adjustment	If target area adjustment (TAA) will be used to account for vertical fenestration and/or skylight area in excess of the prescriptive maximum allowed, include TAA calculations in WSEC envelope compliance reports.		
NA	C402.4.2	Single story spaces requiring skylights	Provide list of enclosed, single story spaces located directly under a roof that exceed 2,500 sf floor area and have a ceiling height ≥ 15 ft for at least 75% of the ceiling area within the space; for each space identify the space use, floor area, floo		
NA			For each space required to comply with the skylight provision, provide calculations for percentage of conditioned floor area located within a toplit daylight zone (minimum is 50%); if exception is taken for spaces where the total floor area minus the side		
NA			Indicate compliance method applied to each space (minimum ratio of skylight area to toplit daylight zone area is ≥ 3%, OR minimum skylight effective aperture is ≥ 1% per Equation C4-5); provide compliance method calculations for each space		
NA			Indicate haze factor of skylight glazing material or diffuser.		
NA	C410.2	Walk-in and warehouse cooler and freezer envelope	Indicate insulation R-values for cooler and freezer wall and ceiling assemblies in plans and WSEC envelope compliance reports		
NA			Indicate cooler and freezer door insulation R-values in plans and WSEC envelope compliance reports; indicate method of minimizing air infiltration (strip doors, curtains, spring-hinged doors, etc); provide automatic door closure (or note exception taken)		
NA			For transparent reach-in doors and fixed windows, indicate number of glass panes (double or triple pane); indicate whether the interstitial spaces between panes is filled with inert gas or if panes are heat-reflective treated glass.		
ENVELOPE ASSEMBLIES - ADDITIONAL ENERGY EFFICIENCY MEASURE					
NA	C406.2.12	Enhanced thermal envelope performance	To comply with this additional efficiency measure, indicate thermal envelope compliance is via component performance; provide WSEC envelope compliance reports that demonstrate Proposed Total UxA is 15% lower than the Allowable (Code Target) Total UxA.		
ENVELOPE ASSEMBLIES - LOAD MANAGEMENT MEASURES					

BEE ENGINEERS
170 W DAYTON ST, SUITE 206
EDMONDS, WA 98020
PH: 425 672-3900
FAX: 425 712-8608

PATRICK McMAHON
STATE OF WASHINGTON
24053
REGISTERED
PROFESSIONAL ENGINEER

BARNABIE POINT PROJECT

3700 E Mercer Way
Mercer Island, WA 98040

	DATE	DESCRIPTION
	01.02.2025	DESIGN DEVELOPMENT
	06.04.2025	BUILDING PERMIT
	08.20.2025	COORDINATION SET
	10.22.2025	BP CORRECTIONS
	12.15.2025	100% CD SET

PHASE:

4 JUNE 2025
BUILDING PERMIT

BEE PROJECT #: 2403-1017

P.E.: Patrick McMahon
P.M.: Patrick McMahon
ENERGY: Katya Bautista
DRAFTER: Denin Dazey

© COPYRIGHT BEE ENGINEERS

THESE DRAWINGS ARE FOR GENERAL ARRANGEMENT OF MATERIALS ON SITE CONDITIONS GOVERN. DO NOT SCALE DRAWINGS TO OBTAIN DIMENSIONS.

SHEET NAME:

BUILDING ENVELOPE ENERGY FORMS

SHEET NUMBER:

BE902

Building Envelope Requirements List, pg 9 of 13

2021 WSEC Requirements for Commercial Buildings including Group R2, R3 & R4 over 3 stories & all R1 -- Administered by ©2025 NEEA, All rights reserved
The following information is necessary to check a building permit application for compliance with the building envelope requirements in the Washington State Energy Code, Commercial Provisions.
For questions about this report, contact WSEC Commercial Technical Support at 360-539-5300 or via email at com.techsupport@waenergycodes.com

NA	C406.3.3	Automated shading	To comply with this additional efficiency measure, provide calculations that demonstrate window-to-wall ratio (WWR) on south & west facing exposures exceed 20%: indicate method of shading (movable exterior shading or dynamic glazing) on plans for all sunl		
NA	C406.3.3	Automated shading	Indicate automatic controls are connected to a central DDC system having digital input capable of being activated by an external utility signal; where utility real-time demand or pricing program exists, indicate system configured to utilize this signal; o		
NA	C406.3.7	Building thermal mass	To comply with this additional efficiency measure, indicate building includes mass wall and floor assemblies with indoor facing mass surfaces that communicate directly with the conditioned indoor air (wall board and hard surface flooring are permitted wit		
NA	C406.3.7	Building thermal mass	Indicate HVAC systems serving areas with building thermal mass are configured with summer mode night flush sequence control of air economizers to pre-cool the building during unoccupied periods		
NA	C406.3.7	Building thermal mass	Indicate automatic controls are connected to a central DDC system having digital input capable of being activated by an external utility signal; where utility real-time demand or pricing program exists, indicate system configured to utilize this signal; o		
AIR BARRIER & AIR LEAKAGE TEST					
YES	C402.5.1.1	Air barrier construction and sealing	Identify location and provide diagram of continuous air barrier in plans and sections	A-007	
YES			Provide details for all joints, transitions in materials, penetrations in air barrier and note method of sealing (caulked, gasketed, or other approved method)	A-007	
NA	C402.5.5 C402.5.1.1	Rooms containing fuel burning space conditioning appliances	For room(s) located within the conditioned space that contain non-direct vent fuel-burning appliances that require outdoor air for combustion, indicate method of isolation from the conditioned space; include sealing of walls, floor and ceiling of room, do		
NA			Indicate walls, floor and ceiling of the room envelope are insulated to the same level required for an exterior envelope; indicate combustion air ductwork that passes through conditioned space is provided with at minimum R-16 insulation.		
NA	C402.5.6	Doors and access openings to shafts, chutes, stairways and elevator lobbies	Indicate locations of all doors and access openings to shafts, chutes, stairways and elevator lobbies on plans		

Building Envelope Requirements List, pg 10 of 13

2021 WSEC Requirements for Commercial Buildings including Group R2, R3 & R4 over 3 stories & all R1 -- Administered by ©2025 NEEA, All rights reserved
The following information is necessary to check a building permit application for compliance with the building envelope requirements in the Washington State Energy Code, Commercial Provisions.
For questions about this report, contact WSEC Commercial Technical Support at 360-539-5300 or via email at com.techsupport@waenergycodes.com

NA			Indicate method of sealing of these openings (gasketing, weatherstripping, other sealing method); or exception taken.		
YES	C402.5.7	Outdoor air intakes, exhaust and relief openings	Indicate locations of all stairway enclosure, elevator shaft and building pressurization relief openings, outside air intakes and exhaust openings on plans	Arch	
YES			Indicate in air barrier documentation and mechanical plans that all relief, outside air intake and exhaust openings shall be provided with dampers in accordance with Mechanical Section C403.7.8.	A-007	
NA	C402.5.10	Recessed lighting in building envelope	Indicate method of sealing between light fixture housing and wall or ceiling		
NA			Indicate in air barrier documentation and lighting fixture schedules that all recessed lighting fixtures shall be IC rated and have an air leakage rating not greater than 2 cfm per ASTM E283 test.		
NA	C402.5.8	Loading dock seals	Indicate weather seal at cargo and loading dock doors.		
YES	C402.5.9	Vestibules	Indicate locations and dimensions of vestibules for building entrances; also indicate vestibule information for exit-only doors in buildings where separate doors for entering and exiting are provided	Arch	
NA			Indicate locations of all building entrances and exit-only doors provided with an air curtain in lieu of a vestibule; indicate air curtain performance complies with requirements per C402.5.9 Exception 7		
NA			Indicate exception and criteria utilized for all building entrances and exit-only doors that do not have a vestibule or air curtain		
NA			For unconditioned vestibules, indicate which vestibule envelope assembly (interior or exterior) complies with the thermal envelope performance requirements for a conditioned space.		
NA	C103.2 C402.5.1.2C 402.5.1.2.1	Building enclosure air leakage test	Indicate in project documents that building enclosure air leakage testing is required for WSEC compliance		
YES			Provide area calculations that account for all six sides of the air barrier boundaries	A-007	
YES			For commercial buildings, indicate that building enclosure air leakage testing shall be performed per ASTM C779 (or equivalent method approved by the code official) and the target leakage rate is 0.25 cfm/ft2 (1.5 L/s*m2) at 0.3 in. wg (75 Pa)	A-007	

Building Envelope Requirements List, pg 11 of 13

2021 WSEC Requirements for Commercial Buildings including Group R2, R3 & R4 over 3 stories & all R1 -- Administered by ©2025 NEEA, All rights reserved
The following information is necessary to check a building permit application for compliance with the building envelope requirements in the Washington State Energy Code, Commercial Provisions.
For questions about this report, contact WSEC Commercial Technical Support at 360-539-5300 or via email at com.techsupport@waenergycodes.com

YES			For a commercial or Group R occupancy area weighted test, indicate that tested portions of the building shall include all spaces directly under the roof, all spaces that have a building entrance, exposed floor, loading dock or are below grade plane, and representative above-grade areas that total ≥ 25% of the building total above-grade wall area; indicate in project documents that the weighted average air leakage rate of the building thermal envelope shall not exceed 0.25 cfm/ft2 (1.27 L/s*m2) when measured at a pressure differential of 0.3 in. wg (75 Pa).	A-007	
YES			For a Group R occupancy building where dwelling units, sleeping units or other condition spaces are accessed directly from the outdoors, indicate that each testing unit, or a representative sampling of units, shall be tested separately via an un-guarded blower door test; indicate in project documents that the weighted average air leakage rate of all testing units combined shall not exceed 0.25 cfm/ft2 (1.27 L/s*m2) when measured at a pressure differential of 0.2 in. wg (50 Pa).	A-007	
NA			If the building is mixed residential / commercial and three stories or less above grade plane, indicate which building enclosure air leakage test procedure will be used for the Group R-2 / R-3 areas (Section R402.4.1.2 or C402.5.1.2); if per R402.4.1.2, i		
YES			Include the following requirements in project documents: (1) Submit building enclosure air leakage test reports to jurisdiction and owner; (2) If initial test result exceeds 0.25 cfm/ft2 (1.5 L/s*m2), indicate that inspection and all practical corrective	A-007	
AIR LEAKAGE TEST - ADDITIONAL ENERGY EFFICIENCY MEASURES					
NA	C406.9	Reduced air infiltration	To comply with additional efficiency credit, indicate in project documents that the building enclosure air leakage test results shall not exceed 0.17 cfm/ft2 at 0.3 in. wg (75 Pa); all documentation requirements per C103.2 and C402.5.1.2 apply		
NA	C406.2.13 C406.2.13.2	Enhanced reduced air leakage	To comply with this additional efficiency measure, indicate in project documents that the measured air leakage rate of the building thermal envelope for the total conditioned floor area of the whole building or fully isolated building addition or tenant space, shall not exceed 0.0825 cfm/ft2 (0.419 L/s*m2) when measured at a pressure differential of 0.3 in. wg (75 Pa); all documentation requirements per C103.2 and C402.5.1.2 apply.		
ELEVATORS - ADDITIONAL ENERGY EFFICIENCY MEASURE					

Building Envelope Requirements List, pg 12 of 13

2021 WSEC Requirements for Commercial Buildings including Group R2, R3 & R4 over 3 stories & all R1 -- Administered by ©2025 NEEA, All rights reserved
The following information is necessary to check a building permit application for compliance with the building envelope requirements in the Washington State Energy Code, Commercial Provisions.
For questions about this report, contact WSEC Commercial Technical Support at 360-539-5300 or via email at com.techsupport@waenergycodes.com

NA	C406.2.18	Efficient elevator equipment	For buildings ≥ 3 stories above grade, to comply with this additional efficiency measure identify on plans which floors are served by elevators that are rated ISO 25745-2 Energy Efficiency Class A; if not all floors are served by this elevator class, p		
KITCHEN & LAUNDRY - ADDITIONAL ENERGY EFFICIENCY MEASURES					
NA	C406.2.14	ENERGY STAR commercial kitchen equipment(¿½	Indicate building area that this additional efficiency measure is being applied to is Group A-2 or other occupancy where the primary business requires the use of commercial kitchen equipment; include kitchen equipment schedule on plans; indicate project i		
NA	C406.2.15	ENERGY STAR kitchen appliances serving Group R-1 & R-2	For Group R-1 & R-2 occupancies, to comply with this additional efficiency measure indicate ≥ 90% of all residential dishwashers, refrigerators and freezers specified are ENERGY STAR Most Efficient qualified models; include kitchen equipment schedule o		
NA	C406.2.16	ENERGY STAR in-unit laundry appliances serving Group R-2	For Group R-2 occupancies, to comply with this additional efficiency measure indicate ≥ 90% of all in-unit residential clothes washers and dryers specified are ENERGY STAR Most Efficient qualified models; include laundry equipment schedule on plans; if		
NA	C406.2.17	ENERGY STAR heat pump clothes dryers serving Group R-1 & R-2	For Group R-1 & R-2 occupancies, to comply with this additional efficiency measure indicate ≥ 90% of all clothes dryers specified are ENERGY STAR qualified heat pump dryers; includes dryers located in-unit and within central multi-family use laundry ro		
ENVELOPE ALTERATIONS					
NA	C503.1	Roof alteration - insulation	For a roof alteration where existing ceiling cavities are exposed, indicate cavities are insulated to full depth at a minimum nominal value of R-3.0 per inch.		
NA			For a roof covering replacement where insulation is installed entirely above the roof deck, or the existing roof contains no insulation, indicate insulation complies with requirements for new construction per Tables C402.1.3 or C402.1.4.		
NA	C503.1	Wall and floor alteration - insulation	For a wall or floor alteration (floor over outdoor or unconditioned space) where existing envelope cavities are exposed, indicate cavities are insulated to full depth at a minimum nominal value of R-3.0 per inch.		

Building Envelope Requirements List, pg 13 of 13

2021 WSEC Requirements for Commercial Buildings including Group R2, R3 & R4 over 3 stories & all R1 -- Administered by ©2025 NEEA, All rights reserved
The following information is necessary to check a building permit application for compliance with the building envelope requirements in the Washington State Energy Code, Commercial Provisions.
For questions about this report, contact WSEC Commercial Technical Support at 360-539-5300 or via email at com.techsupport@waenergycodes.com

NA	C503.3.2	Addition of vertical fenestration	Where the addition of new vertical fenestration results in a window-to-wall ratio (WWR) exceeding the prescriptive maximum allowed per C402.4.1, demonstrate method of compliance (prescriptive vertical fenestration alternate, component performance with tar		
NA	C503.3.3	Addition of skylights	Where the addition of new skylights results in a skylight-to-roof ratio (SRR) exceeding the prescriptive maximum allowed per C402.4.1, demonstrate method of compliance (component performance compliance with target area adjustment for the alteration area a		
NA	C103.2 C103.6.3 C505.1 C505.4	Change in space conditioning or occupancy envelope compliance path	For areas under-going a change in space conditioning or occupancy, indicate envelope thermal performance compliance path applied to the building alteration area (prescriptive compliance or component performance with 110% target UxA allowance); provide cor		
NA	C103.2 C103.6.3 C505.1 C505.4	Change in space conditioning or occupancy envelope compliance path	If complying via total building performance with 110% allowance, provide a list of all proposed envelope component types, areas and U-values in energy model documentation.		
PROJECT CLOSE OUT					
YES	C103.6	Documentation and submittal requirements	Indicate in plans that project close out documentation is required including envelope record construction documents, applicable calculations, WSEC envelope compliance reports, and fenestration NFRC rating certificates.	BE900	
YES	C401.4	Thermal envelope certificate	Indicate in plans that a thermal envelope certificate is required at project close out; indicate that information on this certificate shall include the rated R-values of all opaque assembly insulation, U-factors & SHGCs for all fenestration assemblies and	BE900s	
If "no" is selected for any question, provide explanation.					

BEE ENGINEERS
170 W DAYTON ST, SUITE 206
EDMONDS, WA 98020
PH: 425 672-3900
FAX: 425 712-8608

PATRICK McMAHON
STATE OF WASHINGTON
19535
REGISTERED
PROFESSIONAL ENGINEER

BARNABIE POINT PROJECT

3700 E Mercer Way
Mercer Island, WA 98040

	DATE	DESCRIPTION
	01.02.2025	DESIGN DEVELOPMENT
	06.04.2025	BUILDING PERMIT
	08.20.2025	COORDINATION SET
	10.22.2025	BP CORRECTIONS
	12.15.2025	100% CD SET

PHASE:

4 JUNE 2025
BUILDING PERMIT

BEE PROJECT #: 2403-1017

P.E.: Patrick McMahon
P.M.: Patrick McMahon
ENERGY: Katya Bautista
DRAFTER: Denin Dazey

© COPYRIGHT BEE ENGINEERS

THESE DRAWINGS ARE FOR GENERAL ARRANGEMENT OF MATERIALS ON SITE CONDITIONS GOVERN. DO NOT SCALE DRAWINGS TO OBTAIN DIMENSIONS.

SHEET NAME:

BUILDING ENVELOPE ENERGY FORMS

SHEET NUMBER:

BE903

Copyright©, Stirrett-Johnsen, Inc., Silverdale, Washington 2018. License to use this design is limited to construction of its particular subject. Authority to retain copies or any derivatives such as shop drawings is limited to one set for record purposes. This design was produced assuming construction by Stirrett Johnsen field forces and an expectation that field conditions may require adjustment which would be coordinated with, or by, those field forces.

Abbreviations Legend

A	
@	AT
A/C	AIR CONDITION(ING) (ED)
A/C UNIT	AIR CONDITIONING UNIT
AB	ANCHOR BOLT
ABBVR	ABBREVIATION
ACCU	AIR COOLED CONDENSING UNIT
AD	AREA DRAIN, ACCESS DOOR
ADA	AMERICANS WITH DISABILITIES ACT
ADDL	ADDITIONAL
ADDM	ADDENDUM
AE	ARCHITECT/ ENGINEER
AFC	AUTOMATIC FLOW CONTROL
AFF	ABOVE FINISHED FLOOR
AHR	AIR HOSE REEL
AHU	AIR HANDLING UNIT
ALT	ALTERNATE
AP	ACCESS PANEL
ARCH	ARCHITECT(URAL)
AS	AIR SEPARATOR
B	
B/B	BACK-TO-BACK
BD	BLOW DOWN
BLDG	BUILDING
BM	BENCHMARK, BEAM
BOT	BOTTOM
BRZ	BRONZE
BSMT	BASEMENT
BTU	BRITISH THERMAL UNIT
BTWN	BETWEEN
BV	BALANCING VALVE
BWV	BACKWATER VALVE
C	
CB	CATCH BASIN
CD	CONDENSATE DRAINAGE
CF/CI	CONTRACTOR FURNISHED/ CONTRACTOR INSTALLED
CF/OI	CONTRACTOR FURNISHED/ OWNER INSTALLED
CI	CAST IRON
CL	CENTER LINE
CLG	CEILING
CLR	CLEAR
CMU	CONCRETE MASONRY UNIT
CO	CLEANOUT
COL	COLUMN
CONC	CONCENTRATE, CONCRETE
COND	CONDENSATE
CONN	CONNECT(ION), CONNECT
CONT	CONTINUOUS
CONV	HYDRONIC CONVECTOR
COORD	COORDINATE, COORDINATION
CTR	CENTER
CTRL	CONTROL
CUH	CABINET UNIT HEATER
CW	COLD WATER, CASEMENT WINDOW
D	
DB	DRY BULB
DBL	DOUBLE
DCW	DOMESTIC COLD WATER
DEG	DEGREE
DEMO	DEMOLITION
DET	DETAIL
DF	DRINKING FOUNTAIN
DFU	DRAINAGE FIXTURE UNIT
DHW	DOMESTIC HOT WATER
DHWC	DOMESTIC HOT WATER CIRC.
DIA or Ø	DIAMETER
DIFF	DIFFUSER
DIM	DIMENSION
DIST	DISTANCE
DN	DOWN
DOZ	DOZEN
DS	DOWNSPOUT
DW	DISH WASHER
DWG	DRAWING
DXC	DIRECT EXPANSION COOLING COIL
E	
E	EAST
EA	EACH, EXHAUST AIR
EL	ELEVATION
ENCL	ENCLOSURE
ENGR	ENGINEER
EPDM	ETHYLENE PROPYLENE DIENE MONOMER
EQ	EQUAL
EQUIP	EQUIPMENT
ETC	ET CETERA
EWC	ELECTRIC WATER COOLER
EWH	ELECTRIC WATER HEATER
EXC	EXCAVATE
EXH	EXHAUST
EXIST	EXISTING
EXP	EXPAND, EXPANSION
EXT	EXTERIOR
F	
F/F	FACE-TO-FACE
FACP	FIRE ALARM CONTROL PANEL
FCU	FAN COIL UNIT

Abbreviations Legend

FD	FLOOR DRAIN
FDR	FOUNDATION DRAINAGE
FIN	FINISH
FIXT	FIXTURE
FLR	FLOOR
FNDN	FOUNDATION
FOR	FUEL OIL RETURN
FOS	FUEL OIL SUPPLY
FOV	GENERATOR VENT
FRP	FIBERGLASS REINFORCED PLASTIC
FT	FOOT, FEET
FTG	FOOTING
G	
GA	GAGE
GAL	GALLON
GALV	GALVANIZED
GALV STL	GALVANIZED STEEL
GC	GENERAL CONTRACTOR
GD	GARAGE DRAIN
GE	GENERATOR EXHAUST
GE	GENERATOR EXHAUST
GEN	GENERAL, GENERATOR
GL	GLASS, GROUND LEVEL
GYM	GYMNASIUM
H	
HB	HOSE BIBB
HC	HANDICAP, HOLLOW CORE
HCP	HANDICAPPED
HD	HEAVY DUTY
HR	HOUR
HT	HEIGHT
HVAC	HEATING, VENTILATING AND AIR CONDITIONING
HW	HOT WATER
I	
ID	INSIDE DIAMETER
IN	INCHES
INCL	INCLUDE
INFO	INFORMATION
INSUL	INSULATION
IRR	IRRIGATION WATER
J	
JAN	JANITOR
JAN CLO	JANITOR CLOSET
K	
KIP	1000 POUNDS
KIT	KITCHEN
L	
L	LITER, ANGLE
LAB	LABORATORY
LAV	LAVATORY
LBL	LABEL
LBS	POUND
LF	LINEAR FEET
LIN	LINEAR
M	
MACH	MATCHLINE
MACH RM	MACHINE ROOM
MAINT	MAINTENANCE
MATL	MATERIAL
MAX	MAXIMUM
MC	MECHANICAL CONTRACTOR
MECH	MECHANICAL
MECH RM	MECHANICAL ROOM
MFR	MANUFACTURER
MIN	MINIMUM
MISC	MISCELLANEOUS
MM	MILIMETER
N	
N	NORTH
NA	NOT APPLICABLE
NG	NATURAL GAS
NGV	NATURAL GAS VENT
NIC	NOT IN CONTRACT
NO or #	NUMBER
NOM	NOMINAL
NTS	NOT TO SCALE
O	
O2	OXYGEN
OC	ON CENTER
OD	OUTSIDE DIAMETER
OF/ OI	OWNER FURNISHED/ OWNER INSTALLED
OF/CI	OWNER FURNISEHD/ CONTRACTOR INSTALLED
OPNG	OPENING
OPP	OPPOSITE
OPT	OPTIONAL, OPTIMUM
ORD	OVERFLOW ROOF DRAIN
ORL	OVERFLOW RAIN LEADER
P	
PC	PLUMBING CONTRACTOR
PERF	PERFORATED
PGD	PUMPED GARAGE DRAIN

Abbreviations Legend

PL	PLATE, PROPERTY LINE
PLBG	PLUMBING
PNL	PANEL
PRELIM	PRELIMINARY
PRKG	PARKING
PROJ	PROJECT
PS	PUMPED STORM
PSF	POUNDS PER SQUARE FOOT
PSI	POUNDS PER SQUARE INCH
PT	POST TENSIONED
PVC	POLYVINYL CHLORIDE (PLASTIC)
PW	PUMPED WASTE
PWR	POWER
Q	
QTR	QUARTER
QTY	QUANTITY
R	
R	RISER, RADIUS, HEAT RESISTANCE
RA	RETURN AIR
RAD	RADIATOR
RCP	REFLECTED CEILING PLAN
RD	ROOF DRAIN
REG	REGISTER, REGULATION
REINF	REINFORCE
REQD	REQUIRED
REV	REVISION
RFI	REQUEST FOR INFORMATION
RH	RIGHT HAND, ROOF HATCH
RL	RAIN LEADER
RM	ROOM
RO	REVERSE OSMOSIS, ROUGH OPENING
RTU	ROOF TOP UNIT
RV	ROOF VENT
S	
S	SOUTH
SAN	SANITARY
SCHED	SCHEDULE
SECT	SECTION
SF	SQUARE FOOT, SAFETY FACTOR
SHR	SHOWER
SHT	SHEET
SIM	SIMILAR
SOG	SLAB ON GRADE
SPEC	SPECIFICATION(S)
SQ	SQUARE
SS	STAINLESS STEEL
STD	STANDARD
STOR	STORAGE
STRUCT	STRUCTURAL
SUB	UBSTITUTE
SV	SAFETY VALVE, SHEET VINYL
SY	SQUARE YARD
SYM	SYMBOL
SYS	SYSTEM
T	
T	TREAD
T & B	TOP AND BOTTOM
TD	TRENCH DRAIN
TECH	TECHNICAL, TECHNOLOGY
TEMP	TEMPORARY, TEMPERATURE
THK	THICKNESS
THRU	THROUGH
TOC	TOP OF CONCRETE
TOF	TOP OF FOOTING, TOP OF FLOOR, TOP OF FRAME
TOS	TOP OF STEEL
TYP	TYPICAL
U	
U	HEAT TRANSFER COEFFICIENT
U/G	UNDERGROUND
UH	UNIT HEATER
UL	UNDERWRITERS LABORATORIES
UNO	UNLESS NOTED OTHERWISE
UTIL	UTILITY
UV	UNIT VENTILATOR
V	
V	SANITARY VENT, VOLT
VAR	VARIES, VARIATION
VENT	VENTILATION
VERT	VERTICAL
VOL	VOLUME
VUH	VERTICAL UNIT HEATER
W	
W	SAN WASTE, WATT, WEST
W/	WITH
W/O	WITHOUT
WC	WALL COVERING, WATER CLOSET
WF	WIDE FLANGE
WH	WATER HEATER, WALL HUNG
WI	WROUGHT IRON
WT	WEIGHT
Y	
Y	YD

PIPING MATERIAL SPECIFICATIONS

PIPING	LOCATION	MATERIAL	SIZE	JOINT	PIPING STANDARDS	DESIGN PRESSURE	NSF COMPLIANCE 14	NSF COMPLIANCE 61	NSF COMPLIANCE 372	COMMENTS
COLD WATER	ABOVE GROUND	PEX	2" & SMALLER	EXPANSION	ASTM AF876, ASTM F877, CSA B1375, AWWA C904	125 PSI	-	YES	YES	
		COPPER TYPE L	2" & SMALLER	LEAD-FREE SOLDER	ASTM B42, ASTM B43, ASTM B75, ASTM B88 ASTM B135, ASTM B251, ASTM B302, ASTM B447	125 PSI	-	YES	YES	
			4" & SMALLER	PROPRESS MECH JOINT		200 PSI	-	YES	YES	
			2 1/2" & LARGER	MFR APPROVED		250 PSI	-	YES	YES	
		STAINLESS STL	2 1/2" & LARGER	WELD/ROLL GROOVE	ASTM A269, ASTM A312	300 PSI	-	YES	YES	
	IN-SLAB (CONCRETE)	SLEEVED PEX	2" & SMALLER	NO JOINTS IN-SLAB PERMITTED	ASTM AF876, ASTM F877, CSA B1375, AWWA C904	125 PSI	-	YES	YES	
HOT WATER	ABOVE GROUND	PEX	2" & SMALLER	EXPANSION	ASTM AF876, ASTM F877, CSA B1375, AWWA C904	125 PSI	-	YES	YES	
		COPPER TYPE L	2" & SMALLER	LEAD-FREE SOLDER	ASTM AF876, ASTM F877, CSA B1375, AWWA C904	125 PSI	-	YES	YES	
			4" & SMALLER	PROPRESS MECH JOINT		200 PSI	-	YES	YES	
			2 1/2" & LARGER	ROLL GROOVE JOINT		250 PSI	-	YES	YES	
		STAINLESS STL	2 1/2" & LARGER	WELD/ROLL GROOVE	ASTM A269, ASTM A312	300 PSI	-	YES	YES	
	IN-SLAB (CONCRETE)	SLEEVED PEX	2" & SMALLER	NO JOINTS IN-SLAB PERMITTED	ASTM AF876, ASTM F877, CSA B1375, AWWA C904	125 PSI	-	YES	YES	
WASTE	UNDERGROUND	PVC SCH 40 (SOLID WALL)	ALL SIZES	SOLVENT CEMENT	ASTM D2661, ASTM D2680, ASTM D1785, ASTM F794	5 PSI	-	-	-	
	ABOVEGROUND	CAST IRON	ALL SIZES	NO-HUB	ASTM A74, ASTM A888, CISPI 301	5 PSI	-	-	-	
VENT	ALL	PVC SCH 40 (SOLID WALL)	ALL SIZES	SOLVENT CEMENT	ASTM D2661, ASTM D2680, ASTM D1785, ASTM F794	5 PSI	-	-	-	
GREASE WASTE	ALL	PVC SCH 40 (SOLID WALL)	ALL SIZES	SOLVENT CEMENT	ASTM D2661, ASTM D2680, ASTM D1785, ASTM F794	5 PSI	-	-	-	
INDIRECT WASTE	ALL	PVC SCH 40 (SOLID WALL)	ALL SIZES	SOLVENT CEMENT	ASTM D2661, ASTM D2680, ASTM D1785, ASTM F794	5 PSI	-	-	-	
PUMPED WASTE	ALL	PVC SCH 80 (SOLID WALL)	ALL SIZES	SOLVENT CEMENT	ASTM D2661, ASTM D2680, ASTM D1785, ASTM F794	5 PSI	-	-	-	
RAINLEADER (STORM)	UNDERGROUND	PVC SCH 40 (SOLID WALL)	ALL SIZES	SOLVENT CEMENT	ASTM D2661, ASTM D2680, ASTM D1785, ASTM F794	5 PSI	-	-	-	
	ABOVEGROUND	CAST IRON	ALL SIZES	NO-HUB	ASTM A74, ASTM A888, CISPI 301	5 PSI	-	-	-	
PUMPED STORM	ALL	PVC SCH 80 (SOLID WALL)	ALL SIZES	SOLVENT CEMENT	ASTM D2661, ASTM D2680, ASTM D1785, ASTM F794	5 PSI	-	-	-	

NOTES:

1. THESE PLANS ARE SCHEMATIC AND DO NOT SHOW EXACT ROUTING OR EVERY OFFSET WHICH MAY BE REQUIRED.
2. MATERIALS, METHODS, AND INSTALLATION SHALL COMPLY WITH THE PROVISIONS FOR THE 2021 WA ENERGY CODE.
3. ALL PIPE SIZES NOTED ON DRAWINGS ARE MINIMUMS.
4. SLOPE ALL WASTE PIPING AT 1/4" PER FOOT UNLESS OTHERWISE NOTED ON DRAWINGS. OBTAIN APPROVAL FROM CODE AUTHORITY BEFORE INSTALLING WASTE PIPING AT LESS THAN 2% (EVEN IF LESSER SLOPE IS INDICATED ON DRAWINGS)
5. HANGERS AND SUPPORTS FOR PIPING SHALL BE IN ACCORDANCE WITH SECTION 313.6 AND 313.0 - TABLE 313.5 OF THE 2021 ENERGY CODE.
6. PIPING PENETRATIONS OF FIRE RATED WALLS OR FLOORS SHALL BE SLEEVED AND FIRE STOPPED WITH LISTED MATERIALS SO AS TO MAINTAIN THE INTEGRITY AND RATING OF THE FLOOR OR WALL.
7. FOR EXACT ROUGH-IN LOCATIONS AND ELEVATIONS OF PLUMBING FIXTURES REFER TO ARCHITECTURAL DRAWINGS.
8. PROVIDE STOPS OR ANGLE VALVES AT ALL FIXTURES.
9. PROVIDE TRAP PRIMERS FOR ALL SELDOM USED FLOOR DRAINS, TRENCH DRAINS AND STANDPIPES.
10. PROVIDE DIELECTRIC CONNECTIONS BETWEEN DISSIMILAR METALS.
11. CLEAN OUTS SHALL BE INSTALLED SO THEY ARE EASILY ACCESSIBLE.
12. PLUMBING EQUIPMENT, VALVES AND TRAP PRIMERS SHALL BE LOCATED IN EASILY ACCESSIBLE LOCATIONS, UNLESS SHOWN ON ARCHITECTURAL DRAWINGS, REQUIRED ACCESS PANELS SHALL BE PROVIDED BY THE PLUMBING CONTRACTOR AND INSTALLED BY THE GENERAL CONTRACTOR.
13. WATER HAMMER ARRESTERS: PROVIDE PDI RATED WATER HAMMER ARRESTERS AT ALL FIXTURE GROUPINGS.

PLUMBING SERVICES

COLOR	SERVICE	SERVICE ID
	DOMESTIC COLD WATER	DCW
	DOMESTIC HOT WATER	DHW
	DOMESTIC HOT WATER RECIRC	DHWC
	SANITARY WASTE	W
	VENT	V
	PUMPED WASTE	PW
	GREASE WASTE	GW
	RAIN LEADER (STORM)	RL
	PUMPED STORM WATER	PS
	FOUNDATION DRAINAGE	FDR

APPLICABLE PROJECT CODES

YEAR	DESCRIPTION
2021	WASHINGTON STATE PLUMBING CODE AND AMENDMENTS
2021	WASHINGTON STATE ENERGY CODE AND AMENDMENTS

Sheet List

Sheet Number	Sheet Name
P3.03	Unnamed
P0.00	PLUMBING SPECIFICATIONS
P0.01	PLUMBING SPECIFICATIONS
P0.02	PLUMBING SCHEDULES
P0.03	PLUMBING SCHEDULES
P2.UG	PLUMBING UNDERGROUND
P2.B1.1	PLUMBING LEVEL B1 WASTE & VENT
P2.B1.2	PLUMBING LEVEL B1 DOMESTIC WATER
P2.01.1	PLUMBING LEVEL 01 WASTE & VENT
P2.01.2	PLUMBING LEVEL 01 DOMESTIC WATER
P2.02.1	PLUMBING LEVEL 02 WASTE & VENT
P2.02.2	PLUMBING LEVEL 02 DOMESTIC WATER
P2.03.1	PLUMBING LEVEL 03 WASTE & VENT
P2.03.2	PLUMBING LEVEL 03 DOMESTIC WATER
P2.RF	PLUMBING ROOF LEVEL
P3.00	PLUMBING DETAILS
P3.01	PLUMBING DETAILS
P3.02	PLUMBING DETAILS
P4.00	WASTE & VENT RISER DIAGRAM (WEST)
P4.01	WASTE & VENT RISER DIAGRAM (EAST)
P4.10	DOMESTIC WATER RISER DIAGRAM (WEST)
P4.11	DOMESTIC WATER RISER DIAGRAM (EAST)

Stirrett Johnsen INC.
MECHANICAL CONTRACTORS
5555 Westgate Rd NW
Silverdale WA 98383
(360) 692-6128
www.sjimech.com

DAVID CLAYTON ATKINSON
STATE OF WASHINGTON
52745
REGISTERED
PROFESSIONAL ENGINEER

3700 E MERCER WAY
BARNABIE POINT PROJECT

NO.	DATE	DESCRIPTION
2	11.25.2025	PEER REVIEW COMMENTS

4 JUNE 2025
BUILDING PERMIT

PROJECT: 497

PLUMBING SPECIFICATIONS

P0.00

12/12/2025 9:07:38 AM E:\Revit Temp\497 Barnabie Point School _ Plumbing (R2624)_Jkmga.rvt
© ANJALI GRANT DESIGN LLC ORIGINAL SHEET SIZE: 24" X 36"

Copyright©. Stirrett-Johnsen, Inc., Silverdale, Washington 2018. License to use this design is limited to construction of its particular subject. Authority to retain copies or any derivatives such as shop drawings is limited to one set for record purposes. This design was produced assuming construction by Stirrett Johnsen field forces and an expectation that field conditions may require adjustment which would be coordinated with, or by, those field forces.

PIPING INSULATION SCHEDULE

TABLE C403.10.3 MINIMUM PIPE INSULATION THICKNESS (thickness in inches)[a]

Table C404.6

Required Pipe Insulation Thickness for Service Water Heating

LOCATION	WATER TEMP	NOMINAL PIPE OR TUBE SIZE (inches)					INSULATION CONDUCTIVITY	
		< 1	1 to < 1-1/2	1-1/2 to < 4	4 to < 8	≥ 8	CONDUCTIVITY BTU *in./(h * ft² * °F)[b]	MEAN RATING TEMPERATURE °F
CIRCULATION LOOP PIPING NOT IN-PARTITION	105 - 140°F	2.0	2.0	2.5	2.5	2.5	0.21 - 0.28	100
ALL OTHER PIPING NOT IN-PARTITION	105 - 140°F	1.0	1.0	1.5	1.5	1.5		
IN-PARTITION[a] CIRCULATION LOOP PIPING	105 - 140°F	1.0	1.0	1.5	1.5	1.5		
IN-PARTITION[a] ALL OTHER PIPING	105 - 140°F	1.0	1.0	1.5	1.5	1.5		

a. In a partition within a *conditioned space*.
b. For Insulation outside the stated conductivity range, conform to requirements of Table C403.10.1.

DFU LOAD MATRIX

PUMPED WASTE			
FIXTURE TYPE	**QTY**	**DFU**	**DFU TOTAL**
LAVATORY	4	1.0	**4**
WC FLUSH VALVE	8	4.0	**32**
SINK	18	2.0	**36**
DRINKING FOUNTAIN	1	0.5	**0.5**
MOP SINK	1	3.0	**3**
WASHER BOX	2	3.0	**6**
FCO	1	0.0	**0**
4" HD	1	8.0	**8**
ELEVATOR SUMP	1	6.0	**6**
TOTAL DFU INTO SUMP-1			**95.5**
PUMPED WASTE OUT SUMP-1			**80**

GRAVITY WASTE			
FIXTURE TYPE	**QTY**	**DFU**	**DFU TOTAL**
LAVATORY	19	1.0	**19**
WC FLUSH VALVE	22	4.0	**88**

WSFU MATRIX

FIXTURE TYPE	QTY	WSFU	TOTAL WSFU
LAVATORY	23	1.0	23.0
WC FLUSH VALVE	30	40, 30, 20, 15, 10…	365.0
UR FLUSH VALVE	2	20, 15, 10, 8, 5…	35.0
SINK	28	2.0	56.0
KITCHEN SINK	5	2.0	10.0
DRINKING FOUNTAIN	4	0.5	2.0
MOP SINK	5	3.0	15.0
HOSE BIB	3	2.5, 1.0	4.5
WASHER BOX	2	4.0	8.0
MISC (ICE, COFFEE)	1	4.5	4.5
TOTAL PLUMBING WSFU			**523.0**

BUILDING TOTAL	
TOTAL BUILDING WSFU	**523**
TOTAL BUILDING DOMESTIC WATER GPM	**130**
PIPE SIZE REQUIRED	**2-1/2"**
PIPE SIZE PROVIDED	**2-1/2"**

WATER SUPPLY PRESSURE LOSS

DESCRIPTION		UNIT	COMMENTS
TOTAL COLD WATER FIXTURE UNITS	523.0	WSFU	
TOTAL WATER DEMAND	130.0	GPM	
METER SIZE	2.0	INCHES	
LINE SIZE	2.5	INCHES	
PRESSURE TO METER	70	PSI	
METER PRESSURE LOSS	1.0	PSI	OCTAVE ULTRASONIC, 1 PSI MAX LOSS
BACKFLOW PRESSURE LOSS	15.0	PSI	
LENGTH OF PIPE FROM METER TO FARTHEST FIXTURE	600.0	FT	
UNIT PIPE PRESSURE LOSS	1.3	PSI/100'	AVERAGE PRESSURE LOSS / 100 IN SYSTEM
PIPE PRESSURE LOSS	8.0	PSI	
ELEVATION HEIGHT FROM METER TO FARTHEST FIXTURE	30.00	FT	
ELEVATION PRESSURE LOSS	12.99	PSI	
PRESSURE TO FIXTURE	33.0	PSI	

Stirrett Johnsen INC.
MECHANICAL CONTRACTORS
5555 Westgate Rd NW
Silverdale WA 98383
(360) 692-6128
www.sjimech.com

DAVID CLAYTON ATKINSON
STATE OF WASHINGTON
52745
REGISTERED
PROFESSIONAL ENGINEER

3700 E MERCER WAY
BARNABIE POINT PROJECT

NO.	DATE	DESCRIPTION
2	11.25.2025	PEER REVIEW COMMENTS

4 JUNE 2025
BUILDING PERMIT

PROJECT: 497

PLUMBING SPECIFICATIONS

P0.01

12/12/2025 9:07:29 AM E:\Revit Temp\497 Barnabie Point School_Plumbing (R2024)_jdonoga.rvt
© ANJALI GRANT DESIGN LLC ORIGINAL SHEET SIZE: 24" X 36"

Copyright©, Stirrett-Johnsen, Inc., Silverdale, Washington 2018. License to use this design is limited to construction of its particular subject. Authority to retain copies or any derivatives such as shop drawings is limited to one set for record purposes. This design was produced assuming construction by Stirrett Johnsen field forces and an expectation that field conditions may require adjustment which would be coordinated with, or by, those field forces.

PLUMBING FIXTURE SCHEDULE

SYM	TAG	DESCRIPTION	MAKE/MODEL	W	V	CW	HW	GPM / GPF	WSFU	DFU	COMMENTS
	WC-1	WATER CLOSET, WALL MOUNT, FLUSH VALVE	KINGSTON ULTRA K-84325 W/ SLOAN REGAL 111 FLUSHOMETER	4"	2"	1"					1.28GPF
	WC-1A	WATER CLOSET, WALL MOUNT, FLUSH VALVE, ADA	KINGSTON ULTRA K-84325 W/ SLOAN REGAL 111 FLUSHOMETER	4"	2"	1"					1.28GPF
	WC-2	WATER CLOSET, CHILD, FLUSH VALVE FLOOR MOUNTED	AMERICAN STANDARD BABY DEVORO 2282-001 W/ SLOAN REGAL 111 FLUSHOMETER	4"	2"	1"					1.28GPF, 10IN ROUGH-IN
	WC-2A	WATER CLOSET, CHILD, FLUSH VALVE FLOOR MOUNTED, ADA	AMERICAN STANDARD BABY DEVORO 2282-001 W/ SLOAN REGAL 111 FLUSHOMETER	4"	2"	1"					1.28GPF, 10IN ROUGH-IN
	UR-1A	URINAL, WALL MOUNT, FLUSH VALVE, ADA	KOHLER DEXTER W/ SLOAN REGAL FLUSHOMETER	2"	2"	3/4"					1.0GPF
	LAV-1A	LAVATORY, WALL MOUNT, ADA	KOHLER KINGSTON 2005-0 W/ K-13463 FAUCET	2"	2"	1/2"	1/2"				
	LAV-1	LAVATORY, WALL MOUNT	KOHLER KINGSTON 2005-0 W/ K-13463 FAUCET	2"	2"	1/2"	1/2"				
	LAV-2	LAVATORY, UNDERMOUNT	KOHLER CAXTON K-2209 W/ K-13463 FAUCET	2"	2"	1/2"	1/2"				
	SK-1	BREAKROOM SINK, DROP IN	ELKAY LRAD312260 W/ DELTA 9113-AR-DST FAUCET	2"	2"	1/2"	1/2"				
	SK-2	STEM ROOM SINK, DROP IN	ELKAY DLRSQ332210 W/ ELKAY LK500GN08T4 FAUCET	2"	2"	1/2"	1/2"				PROVIDE POINT OF USE ACID NEUTRALIZER: STRIEM LAB RAD LB-2-ADA
	SK-2S	ART ROOM SINK, DROP IN	ELKAY DLRSQ332210 W/ ELKAY LK500GN08T4 FAUCET	2"	2"	1/2"	1/2"				PROVIDE SOLIDS INTERCEPTOR: STRIEM SIDEKICK
	SK-3	CLASSROOM SINK, DROP IN	ELKAY CDKAD251765C W/ LKD208513LC FAUCET, LK35 DRAIN, & LK1141A BUBBLER	2"	2"	1/2"	1/2"				PRESCHOOL AND CLASSROOMS
	SK-4	CLASSROOM SINK, WALL MOUNT	ELKAY EWS31202 W/ CHICAGO 631-GN2FCABCP FAUCET	2"	2"	1/2"	1/2"				ART ROOM AND PRESCHOOL
	SK-5	NOT USED	NOT USED	-	-	-	-				
	SK-6	CHAPEL SINK	ELKAY BLRQ1560 W/ ELKAY LK500GN04T4 FAUCET	2"	2"	1/2"	1/2"				
	KS-1	KITCHEN SINGLE BOWL, HAND SINK	CUSTOM W/ T&S B-0231 FAUCET	2"	2"	1/2"	1/2"				PROVIDED BY OTHERS
	KS-2	KITCHEN SINGLE BOWL, PREP SINK	CUSTOM W/ T&S B-0231 FAUCET	2"	2"	1/2"	1/2"				PROVIDED BY OTHERS
	KS-3	KITCHEN 3-COMPARTMENT SINK	JOHN BOOS DT3B18244-2D18L W/ (2) T&S B-0133-12CRBJST FAUCETS	2"	2"	1/2"	1/2"				PROVIDED BY OTHERS
	DF-1A	DRINKING FOUNTAIN, BI-LEVEL, ADA	ELKAY EZSTLDDWSLK	2"	2"	1/2"	1/2"				DUAL HEIGHT WITH BOTTLE FILLER
	ES-1	EMERGENCY WASH STATION, EYE/FACE/SHOWER	GUARDIAN GBF1909			1-1/4"	1"				W/ ASSE 1071 MIXING VALVE; DRAINS INTO FD-2
	MS-1	MOP SINK 20" x 24"	ELKAY FLR-3X, MOEN 8124	3"	2"	3/4"	3/4"		3.0	3	PROVIDE CHECK VALVES IN VERTICAL PIPE TO FAUCET
	MS-2	MOP SINK 24" x 24"	MUSTEE 63M, MOEN 8124	3"	2"	3/4"	3/4"		3.0	3	PROVIDE CHECK VALVES IN VERTICAL PIPE TO FAUCET
	FCO-1	FLOOR CLEANOUT	SIOUX CHIEF 834-XPNR	3", 4"							PVC BASE ADAPTER, ROUND NICKLE BRONZE TOP
	WCO-1	WALL CLEANOUT	SIOUX CHIEF 870	2", 3", 4"							
	FD-1	FLOOR DRAIN	SIOUX CHIEF 832-X5PNR	2", 3", 4"	2"						PROVIDE TRAP PRIMER, 5-1/2" ROUND NICKLE BRONZE TOP
	FD-2	FLOOR DRAIN	SIOUX CHIEF 832-X5PNR								PROVIDE TRAP PRIMER, 5-1/2" ROUND NICKLE BRONZE TOP
	FS-1	FLOOR SINK	SIOUX CHIEF 860-WXPN	2", 3", 4"	2"						PROVIDE TRAP PRIMER, PVC HUB, 9-3/4 NICKLE BRONZE STRAINER
	FS-2	FLOOR SINK	SIOUX CHIEF 861-XA2								PROVIDE TRAP PRIMER, 12X12X10 NO HUB CONNECTION. ENAMEL COATED CAST IRON W/ ANCHOR FLANGE
	HD-1	HUB DRAIN	SJI FABRICATED	4"	2"						PROVIDE TRAP PRIMER; 4" P-TRAP w/ 6" HUB (FIRE PROTECTION)
	HB-1	HOSE BIB, INTERIOR	WOODFORD MODEL 24			3/4"					ANTI-SIPHON, CHROME FINISH
	NFWH-1	HOSE BIB, EXTERIOR	WOODFORD MODEL 65			3/4"					ANTI-SIPHON, FREEZE PROOF
	TP-1	TRAP PRIMER TAIL PIECE	SIOUX CHIEF TRAPEASE			1/2"					SERVES SINGLE DRAIN
	TP-2	TRAP PRIMER ELECTRONIC	SIOUX CHIEF 695-ES01			1/2"					SERVES SINGLE DRAIN. NOT NEAR SINK/LAV. 120V
	TP-3	TRAP PRIMER ELECTRONIC WITH DISTRIBUTION UNIT	SIOUX CHIEF 695-ESXX			1/2"					SERVES MULTIPLE DRAINS
	WB-1	WALL BOX - WASHING MACHINE	SIOUX CHIEF 696-G2313MF	2"	2"	1/2"	1/2"				1/2" MIP/SWT CONNECTIONS, WATER HAMMER ARRESTOR
	WB-2	WALL BOX - DISHWASHER	SIOUX CHIEF 696-G2413WF	2"	2"	1/2"	1/2"				(2) 1/2" CONNECTIONS & WATER HAMMER ARRESTOR

Stirrett Johnsen INC.
MECHANICAL CONTRACTORS
5555 Westgate Rd NW
Silverdale WA 98383
(360) 692-6128
www.sjimech.com

DAVID CLAYTON ATKINSON
STATE OF WASHINGTON
52745
REGISTERED
PROFESSIONAL ENGINEER

3700 E MERCER WAY
BARNABIE POINT
PROJECT

NO.	DATE	DESCRIPTION
2	11.25.2025	PEER REVIEW COMMENTS

4 JUNE 2025
BUILDING PERMIT

PROJECT: 497

PLUMBING SCHEDULES

P0.02

12/15/2025 9:07:39 AM E:\Revit Temp\497 Barnabie Point School_Plumbing (R2024)_dbrogs.rvt
© ANJALI GRANT DESIGN LLC ORIGINAL SHEET SIZE: 24" X 36"

Copyright©. Stirrett-Johnsen, Inc., Silverdale, Washington 2018. License to use this design is limited to construction of its particular subject. Authority to retain copies or any derivatives such as shop drawings is limited to one set for record purposes. This design was produced assuming construction by Stirrett Johnsen field forces and an expectation that field conditions may require adjustment which would be coordinated with, or by, those field forces.

PLUMBING EQUIPMENT SCHEDULE

TAG	DESCRIPTION	LOCATION	SERVICE	MAKE	MODEL	VOLT/PH	AMP	COMMENTS
SUMP-1	SUMP VAULT	BASEMENT UG	BASEMENT SEWAGE	CUZ	CUSTOM	N/A	N/A	INTERNAL DIMENSIONS:4FT DIA X 7FT DEEP, 36" MANHOLE.
SP-1 & SP-2	SUMP PUMP	BASEMENT UG	BASEMENT SEWAGE	LIBERTY	XLSG208M-5	208/1	18.1 EA	50GPM EA @ 22 FT HEAD. DUPLEX 4 FLOAT W/ CONTROL PANEL, CLASS 1 DIV 1 (EXPLOSION PROOF), SOLIDS HANDLING, 1-1/4" DISCHARGE, 50FT CORD, RAIL KIT.
ESP-1	ELEVATOR SUMP PUMP	ELEVATOR PITS	FIRE SERVICE ACCESS ELEVATORS	LIBERTY	290 SERIES	115/1	10.4	50 GPM, SIMPLEX, INTEGRAL FLOAT CONTROLS; GC / STRUCTURAL TO PROVIDE MINIMUM 24" x 24" x 24" SUMP PIT
RPBP-1	REDUCED PRESSURE BACKFLOW PREVENTER	KITCHEN	COMMERCIAL DISHWASHER	ZURN/WILKINS	975XL3	N/A	N/A	1/2"
RPBP-2	REDUCED PRESSURE BACKFLOW PREVENTER	KITCHEN	DISHWASHER DRAIN COOLER	ZURN/WILKINS	975XL3	N/A	N/A	1/2"
DCVA-1	DOUBLE CHECK VALVE ASSEMBLY	KITCHEN	COFFEE MAKERS	ZURN/WILKINS	950XL3	N/A	N/A	
PRV-1	PRESSURE REDUCING VALVE	KITCHEN	COMMERCIAL DISHWASHER	CASH/ACME	EB25	N/A	N/A	
HWCP-1	HOT WATER CIRC PUMP	BASEMENT PLUMBING ROOM	HOT WATER	B&G	NBF 36	115/1	2.3	
HWH-1	HEATPUMP WATER HEATER	BASEMENT PLUMBING ROOM	HOT WATER	LOCHNIVAR	CHP-120	240/1	67	120 GAL, 42 MBH HEAT PUMP W/ 12 KW ELECTRIC, SET AT 140F, OPERATING WEIGHT 1620LBS
HWH-2	HEATPUMP WATER HEATER	BASEMENT PLUMBING ROOM	HOT WATER	LOCHNIVAR	CHP-120	240/1	67	120 GAL, 42 MBH HEAT PUMP W/ 12 KW ELECTRIC, SET AT 140F, OPERATING WEIGHT 1620LBS
ET-1	THERMAL EXPANSION TANK	BASEMENT PLUMBING ROOM	HOT WATER	AMTROL	ST-60VC	N/A	N/A	
MV-1	MASTER MIXING VALVE	BASEMENT PLUMBING ROOM	HOT WATER	SYMMONS	7-1000	N/A	N/A	SET POINT 120F, 67 GPM @ 10PSI LOSS, ASSE 1017; MAIN BUILDING HW SUPPLY
MV-2	MIXING VALVE	STEM / SCIENCE	HOT WATER	GUARDIAN	G6043	N/A	N/A	ES-1 EMERGENCY WASH STATION, 1" INLETS, 1-1/4" OUTLET, WITH RECESSED CABINET
GWI-1	GREASE WASTE INTERCEPTOR	KITCHEN	GREASE WASTE	SCHIER	GB-50	N/A	N/A	50GPM CAPACITY, 3IN CONNECTIONS. USE RISER EXTENSIONS AS NEEDED.
BV-1	BALANCING VALVE	BASEMENT PLUMBING ROOM	HOT WATER RECIRC	B&G	CB-X-LF	N/A	N/A	SIZE 3/4", THROTTLING VALVE NORMALLY 20% OPEN
BV-2	BALANCING VALVE	BASEMENT PLUMBING ROOM	HOT WATER RECIRC	B&G	CB-X-LF	N/A	N/A	SIZE 1", THROTTLING VALVE NORMALLY 80% OPEN
AF-1	AUTOMATIC FLOW LIMITING VALVE	BASEMENT	HOT WATER	GRISWOLD	K-VALVE 3801	N/A	N/A	SIZE 3/4", FLOW 2.0 GPM
AF-2	AUTOMATIC FLOW LIMITING VALVE	LEVEL 1	HOT WATER	GRISWOLD	K-VALVE 3801	N/A	N/A	SIZE 3/4", FLOW 3.33 GPM
AF-3	AUTOMATIC FLOW LIMITING VALVE	LEVEL 3	HOT WATER	GRISWOLD	K-VALVE 3801	N/A	N/A	SIZE 3/4", FLOW 2.0 GPM
AF-4	AUTOMATIC FLOW LIMITING VALVE	BASEMENT	HOT WATER	GRISWOLD	K-VALVE 3811	N/A	N/A	SIZE 1", FLOW 7.33 GPM

OWNER AND KITCHEN EQUIPMENT SCHEDULE

SJI FIXT TAG	O&K ITEM TAG	LOCATION	ITEM	MAKE	MODEL	W	GW	V	CW	HW	DIRECT / INDIRECT	REQUIREMENTS
IM-1	2	KITCHEN 102	ICE MAKER	HOSHIZAKI	KM-81/116BAJ	1-1/2"			1/2"		INDIRECT WASTE	FS-2; CONNECT TO ITEM 3; NSF CERTIFIED, NO RPBP NEEDED
WF-1	3	KITCHEN 102	WATER FILTRATION						3/4"			
KS-1	5 & 6	KITCHEN 102	HAND SINK	CUSTOM		2"		2"	1/2"	1/2"	DIRECT WASTE	
KS-2	5 & 6	KITCHEN 102	PREP SINK	CUSTOM		2"			1/2"	1/2"	INDIRECT WASTE	FS-2
CM-1	8	KITCHEN 102	COFFEE MAKER						1/2"			QTY - 2
KS-3	20 & 22	KITCHEN 102	3-COMP DISH WASHING SINK	JOHN BOOS	BT3B		2"	2"	1/2"	1/2"	DIRECT WASTE	QTY - 2 (FAUCETS) T&S B-0133-12CRBJST AND B-0231
DW-1	23	KITCHEN 102	DISHWASHER	JACKSON	CONSERVER XL-HH	2"				1/2"	INDIRECT WASTE	FS-2, AIR GAP INCLUDED W/ DW NO RPBP REQUIRED. 1/2" CW CONNECTION TO DRAIN COOLER
GWI-1	24	KITCHEN 102	GREASE WASTE INTERCEPTOR	SEE GWI-1 ABOVE	SEE GWI-1 ABOVE	3"	3"	2"				

NOTE: REFER TO KITCHEN DRAWINGS K-1 & K-2 FOR ADDITIONAL INFORMATION.

12/12/2025 9:07:40 AM E:\Revit Temp\497-Barnabie Point School_ Plumbing (R2024)_bkrega.rvt
© ANJALI GRANT DESIGN LLC ORIGINAL SHEET SIZE: 24" X 36"

Stirrett Johnsen INC.
MECHANICAL CONTRACTORS
5555 Westgate Rd NW
Silverdale WA 98383
(360) 692-6128
www.sjimech.com

DAVID CLAYTON ATKINS
STATE OF WASHINGTON
52745
REGISTERED
PROFESSIONAL ENGINEER

3700 E MERCER WAY
BARNABIE POINT PROJECT

NO.	DATE	DESCRIPTION
2	11.25.2025	PEER REVIEW COMMENTS

4 JUNE 2025
BUILDING PERMIT

PROJECT: 497

PLUMBING SCHEDULES

P0.03

Copyright©, Stirrett-Johnsen, Inc., Silverdale, Washington 2018. License to use this design is limited to construction of its particular subject. Authority to retain copies or any derivatives such as shop drawings is limited to one set for record purposes. This design was produced assuming construction by Stirrett Johnsen field forces and an expectation that field conditions may require adjustment which would be coordinated with, or by, those field forces.

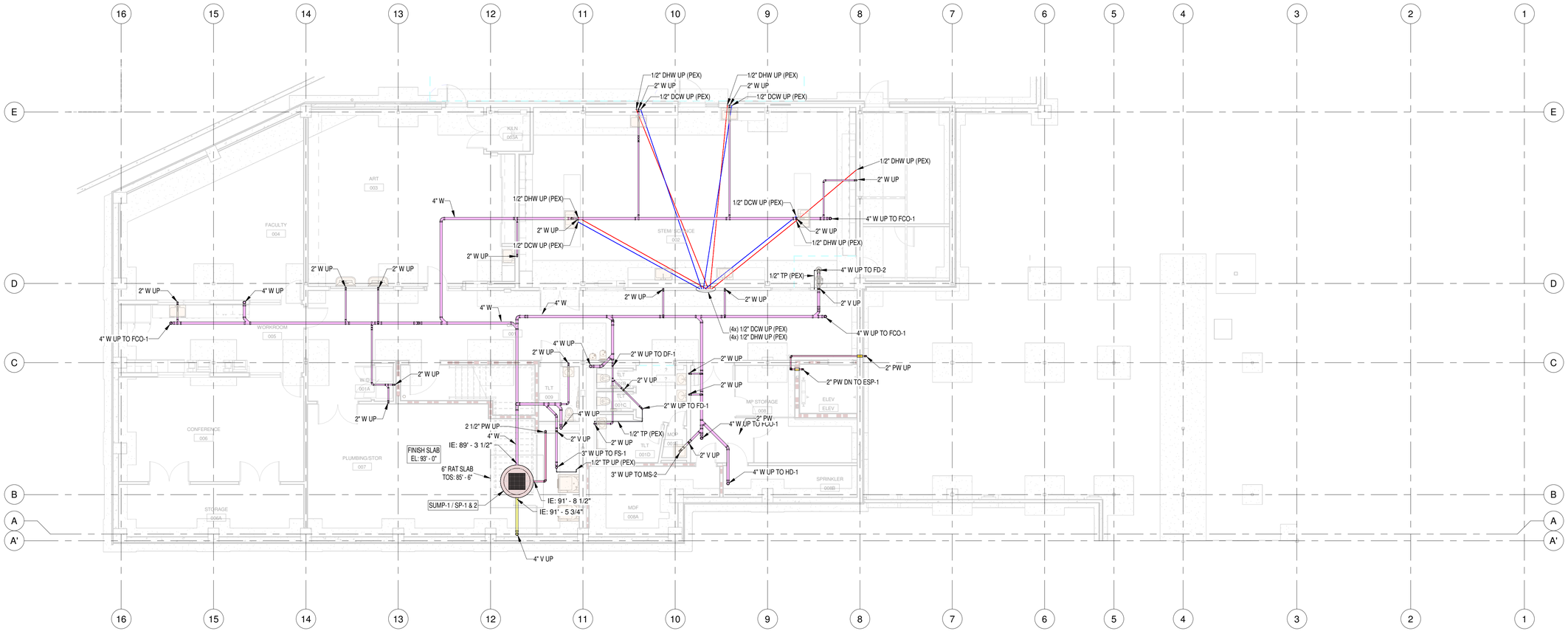

PLUMBING UNDERGROUND
1/8" = 1'-0"

12/12/2025 9:07:43 AM E:\Revit Temp\497 Barnabie Point School - Plumbing (R2024)_dbrogs.rvt
© ANJALI GRANT DESIGN LLC ORIGINAL SHEET SIZE: 24" X 36"

Stirrett Johnsen INC.
MECHANICAL CONTRACTORS
5555 Westgate Rd NW
Silverdale WA 98383
(360) 692-6128
www.sjimech.com

DAVID CLAYTON ATKINSON
STATE OF WASHINGTON
52745
REGISTERED
PROFESSIONAL ENGINEER

3700 E MERCER WAY
BARNABIE POINT PROJECT

NO.	DATE	DESCRIPTION
2	11.25.2025	PEER REVIEW COMMENTS

4 JUNE 2025
BUILDING PERMIT

PROJECT: 497

PLUMBING UNDERGROUND

P2.UG

Copyright©, Stirrett-Johnsen, Inc., Silverdale, Washington 2018. License to use this design is limited to construction of its particular subject. Authority to retain copies or any derivatives such as shop drawings is limited to one set for record purposes. This design was produced assuming construction by Stirrett Johnsen field forces and an expectation that field conditions may require adjustment which would be coordinated with, or by, those field forces.

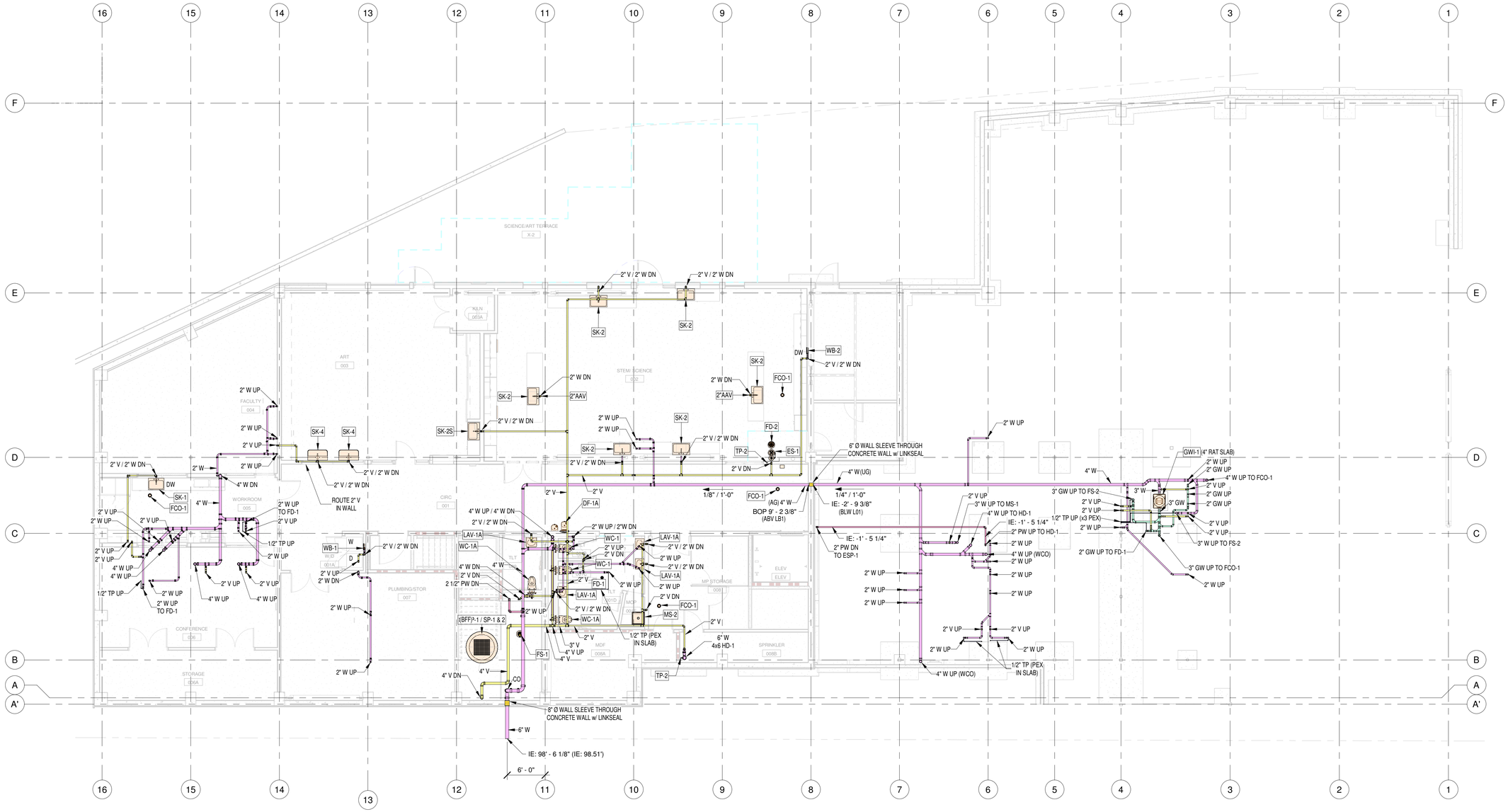
16
15
14
13
12
11
10
9
8
7
6
5
4
3
2
1
F
E
D
C
B
A
A'
SCIENCE/ART TERRACE
X-2
KILN
003A
ART
003
STEM SCIENCE
002
FACULTY
004
WORKROOM
005
CIRC
001
PLUMBING/STOR
007
CONFERENCE
006
STORAGE
006A
MP STORAGE
008
ELEV
ELEV
MDF
009A
SPRINKLER
009B
2" V / 2" W DN
2" W UP
2" V
2" W DN
2" AAV
SK-2
SK-2S
SK-1
SK-4
DW
WB-2
FCO-1
FD-2
TP-2
ES-1
DF-1A
WC-1
WC-1A
LAV-1A
FD-1
MS-2
WB-1
W
D
(BFFP)-1 / SP-1 & 2
FS-1
CO
6" Ø WALL SLEEVE THROUGH CONCRETE WALL w/ LINKSEAL
8" Ø WALL SLEEVE THROUGH CONCRETE WALL w/ LINKSEAL
4" W (UG)
1/4" / 1'-0"
IE: -2' - 9 3/8" (BLW L01)
BOP 9' - 2 3/8" (ABV LB1)
(AG) 4" W
1/8" / 1'-0"
IE: -1' - 5 1/4"
2" PW DN TO ESP-1
2" PW UP TO HD-1
4" W UP (WCO)
3" GW UP TO MS-1
4" W UP TO HD-1
3" GW UP TO FS-2
1/2" TP UP (x3 PEX)
2" GW UP TO FD-1
3" GW UP TO FCO-1
GWI-1
4" RAT SLAB
2" GW UP
4" W UP TO FCO-1
2" GW UP
3" GW
2" V UP
3" W UP TO FS-2
1/2" TP (PEX IN SLAB)
6" W 4x6 HD-1
4" V DN
4" V
6" W
IE: 98' - 6 1/8" (IE: 98.51')
6' - 0"
ROUTE 2" V IN WALL
1/2" TP UP
TO FD-1
TO FCO-1
TO FS-1
TO FS-2
4" W DN
4" W UP
2" V UP
2" W UP
2" GW UP
2" PW UP
2" PW DN
2" W
2" V
2" V DN
2" W UP / 2"W DN
4" W UP / 4" W DN
2 1/2" PW DN
1/2" TP UP
2" W UP TO FD-1
2" W UP TO FCO-1
2" W UP TO FS-1
2" W UP TO FS-2
2" V UP TO MS-1
2" V UP TO HD-1
2" W UP (WCO)
4" W UP (WCO)
2" W UP TO FD-1
2" V UP TO FD-1
2" V UP TO FCO-1
2" V UP TO FS-1
2" V UP TO FS-2
2" W UP TO MS-1
2" W UP TO HD-1
2" V UP TO MS-1
2" V UP TO HD-1
2" W UP TO ESP-1
2" V UP TO ESP-1
2" W UP TO FCO-1
2" W UP TO FS-1
2" W UP TO FS-2

Copyright ©, Stirrett-Johnsen, Inc., Silverdale, Washington 2018. License to use this design is limited to construction of its particular subject. Authority to retain copies or any derivatives such as shop drawings is limited to one set for record purposes. This design was produced assuming construction by Stirrett Johnsen field forces and an expectation that field conditions may require adjustment which would be coordinated with, or by, those field forces.

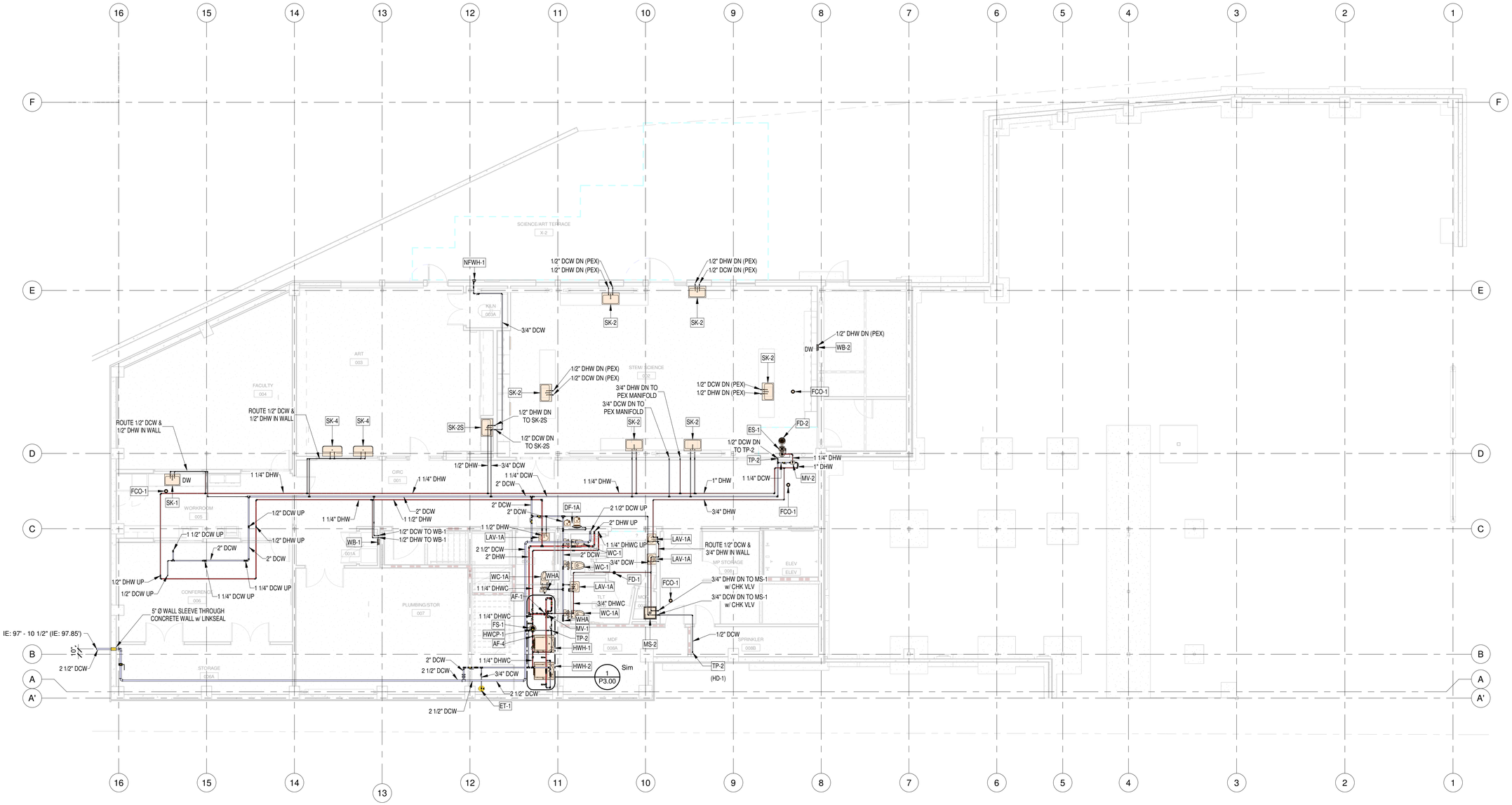

PLUMBING LEVEL B1 DOMESTIC WATER

1/8" = 1'-0"

GENERAL NOTES:

1) DOMESTIC WATER CONNECTIONS TO SINKS & LAVS SHALL BE 1/2" U.N.O.

2) DOMESTIC WATER PIPE 2-1/2" & LARGER TO BE STAINLESS STEEL.

3) DOMESTIC WATER PIPE 2" & SMALLER TO BE PEX.

EXCEPTION: WATER HEATER PIPING 2" & SMALLER WITHIN MECHANICAL SPACE TO BE COPPER. SEE DETAIL 1 / P3.00.

Stirrett Johnsen INC.
MECHANICAL CONTRACTORS
5555 Westgate Rd NW
Silverdale WA 98383
(360) 692-6128
www.sjimech.com

DAVID CLAYTON ATKINSON
STATE OF WASHINGTON
52745
REGISTERED PROFESSIONAL ENGINEER

3700 E MERCER WAY
BARNABIE POINT PROJECT

NO.	DATE	DESCRIPTION
2	11.25.2025	PEER REVIEW COMMENTS

4 JUNE 2025
BUILDING PERMIT

PROJECT: 497

PLUMBING LEVEL B1
DOMESTIC WATER

P2.B1.2

12/12/2025 9:07:51 AM E:\Revit Temp\497-Barnabie Point School_Plumbing (R2024)_bbrogs.rvt
© ANJALI GRANT DESIGN LLC ORIGINAL SHEET SIZE: 24" X 36"

Copyright ©, Stirrett-Johnsen, Inc., Silverdale, Washington 2018. License to use this design is limited to construction of its particular subject. Authority to retain copies or any derivatives such as shop drawings is limited to one set for record purposes. This design was produced assuming construction by Stirrett Johnsen field forces and an expectation that field conditions may require adjustment which would be coordinated with, or by, those field forces.

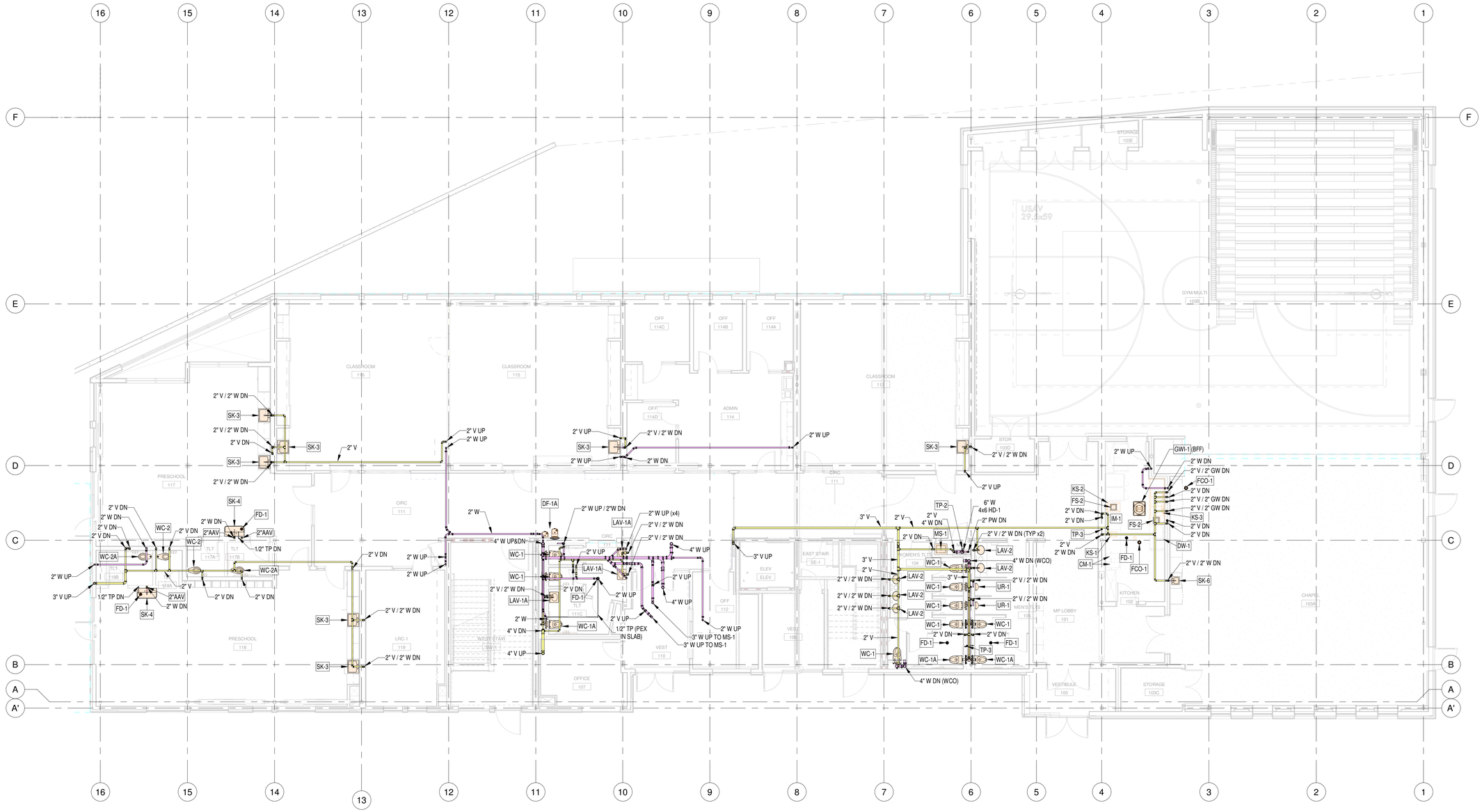

PLUMBING LEVEL 01 WASTE & VENT

1/8" = 1'-0"

GENERAL NOTES:

1) ALL WASTE (W) PIPING SHALL BE RUN AT 1/4" SLOPE U.N.O.
2) ALL VENT (V) PIPING SHALL HAVE THEIR INVERT TAKEN OFF ABOVE THE DRAINAGE CENTERLINE.
3) ALL RAINLEADER (RL) PIPING SHALL BE RUN AT 1/8" SLOPE U.N.O.

Stirrett Johnsen INC.
MECHANICAL CONTRACTORS
5555 Westgate Rd NW
Silverdale WA 98383
(360) 692-6128
www.sjimech.com

DAVID CLAYTON ATKINSON
STATE OF WASHINGTON
52745
REGISTERED PROFESSIONAL ENGINEER

3700 E MERCER WAY
BARNABIE POINT PROJECT

NO.	DATE	DESCRIPTION
2	11.25.2025	PEER REVIEW COMMENTS

4 JUNE 2025
BUILDING PERMIT

PROJECT: 497

PLUMBING LEVEL 01 WASTE & VENT

P2.01.1

12/12/2025 9:07:55 AM E:\Revit Temp\497-Barnabie Point School _ Plumbing (R2024)_bbrogs.rvt
© ANJALI GRANT DESIGN LLC ORIGINAL SHEET SIZE: 24" X 36"

Copyright©, Stirrett-Johnsen, Inc., Silverdale, Washington 2018. License to use this design is limited to construction of its particular subject. Authority to retain copies or any derivatives such as shop drawings is limited to one set for record purposes. This design was produced assuming construction by Stirrett Johnsen field forces and an expectation that field conditions may require adjustment which would be coordinated with, or by, those field forces.

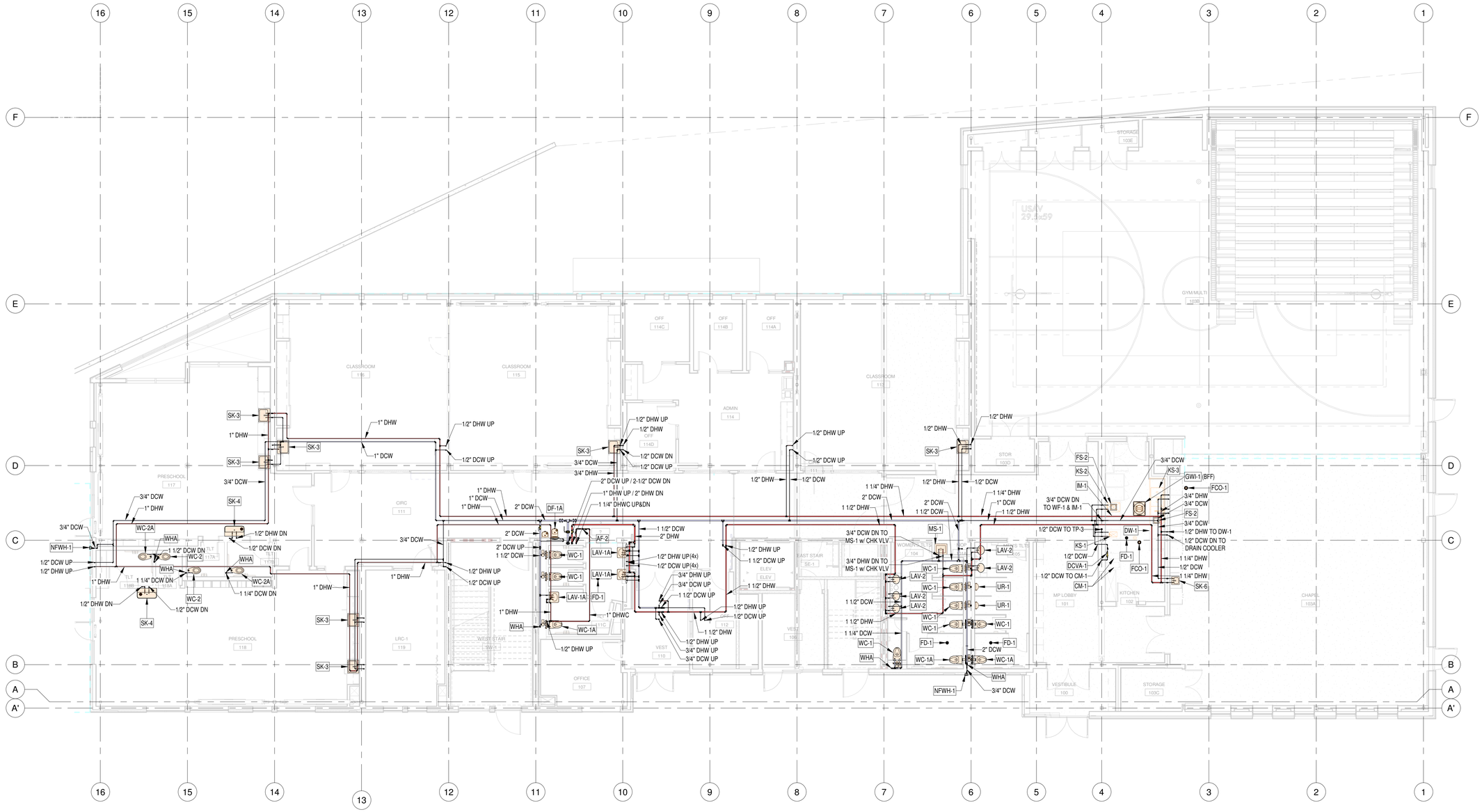
16
15
14
13
12
11
10
9
8
7
6
5
4
3
2
1
F
E
D
C
B
A
A'
CLASSROOM 116
CLASSROOM 115
ADMIN 114
OFF 114C
OFF 114B
OFF 114A
STORAGE 103E
GYM/MULTI 103B
STOR 103D
PRESCHOOL 117
CIRC 111
PRESCHOOL 118
LRC-1 119
WEST STAIR SW-1
EAST STAIR SE-1
ELEV
WOMEN'S TLTS 104
MEN'S TLTS 105
MP LOBBY 101
KITCHEN 102
CHAPEL 103A
VESTIBULE 100
STORAGE 103C
OFFICE 107
VEST 110
VEST 106
SK-3
SK-4
1" DHW
1" DCW
1/2" DHW UP
1/2" DCW UP
1/2" DHW DN
1/2" DCW DN
3/4" DCW
3/4" DHW
2" DCW UP / 2-1/2" DCW DN
1" DHW UP / 2" DHW DN
1 1/4" DHWC UP&DN
2" DCW
1" DCW
1" DHW
DF-1A
AF-2
WC-1
WC-2
WC-2A
WC-1A
LAV-1A
FD-1
1 1/2" DCW
2" DHW
1/2" DHW UP(4x)
1/2" DCW UP(4x)
3/4" DHW UP
3/4" DCW UP
1 1/2" DCW UP
1 1/2" DHW UP
1" DHWC
1 1/2" DHW
3/4" DCW DN TO MS-1 w/ CHK VLV
3/4" DHW DN TO MS-1 w/ CHK VLV
MS-1
LAV-2
UR-1
1 1/4" DHW
1 1/2" DHW
1 1/2" DCW
1 1/4" DCW
2" DCW
1" DCW
1" DHW
1/2" DHW
1/2" DCW
FS-2
KS-2
IM-1
KS-1
DCVA-1
CM-1
3/4" DCW DN TO WF-1 & IM-1
1/2" DCW TO TP-3
1/2" DCW TO CM-1
DW-1
FD-1
FCO-1
KS-3
GWI-1 (BFF)
3/4" DHW
3/4" DCW
1/2" DHW TO DW-1
1/2" DCW DN TO DRAIN COOLER
1 1/4" DHW
1/2" DCW
SK-6
NFWH-1
WHA
1 1/2" DCW DN
1 1/4" DCW DN
1/2" DHW DN
1/2" DCW UP
1/2" DHW UP
1" DHW
3/4" DCW
3/4" DHW
1" DCW
2" DCW UP
1 1/2" DCW
1/2" DHW UP
1/2" DCW UP
1/2" DHW UP
1/2" DCW UP
1/2" DHW UP
1/2" DCW UP

Copyright©, Stirrett-Johnsen, Inc., Silverdale, Washington 2018. License to use this design is limited to construction of its particular subject. Authority to retain copies or any derivatives such as shop drawings is limited to one set for record purposes. This design was produced assuming construction by Stirrett Johnsen field forces and an expectation that field conditions may require adjustment which would be coordinated with, or by, those field forces.

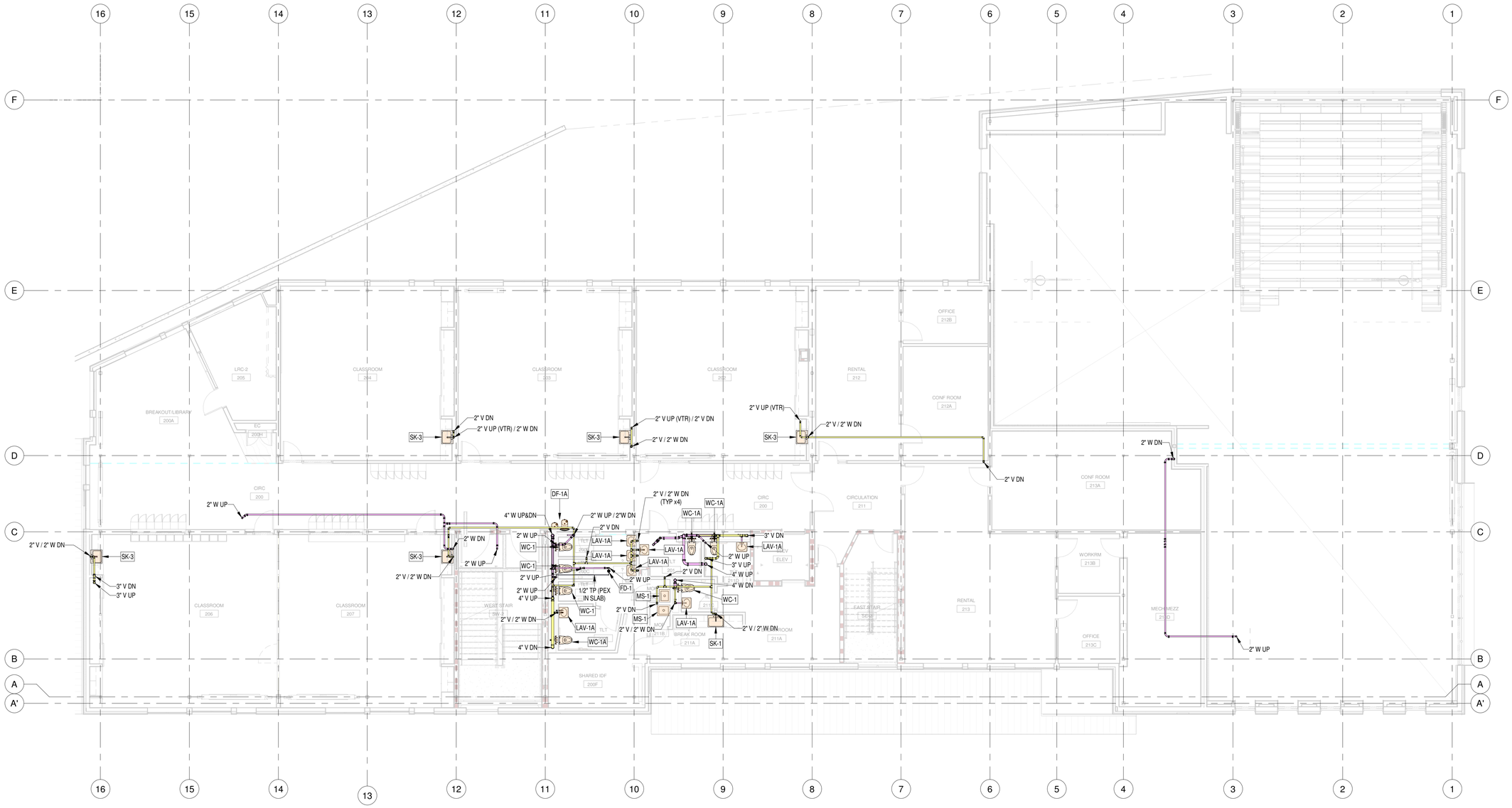

PLUMBING LEVEL 02 WASTE & VENT
1/8" = 1'-0"

GENERAL NOTES:

1) ALL WASTE (W) PIPING SHALL BE RUN AT 1/4" SLOPE U.N.O.
2) ALL VENT (V) PIPING SHALL HAVE THEIR INVERT TAKEN OFF ABOVE THE DRAINAGE CENTERLINE.
3) ALL RAINLEADER (RL) PIPING SHALL BE RUN AT 1/8" SLOPE U.N.O.

Stirrett Johnsen INC.
MECHANICAL CONTRACTORS
5555 Westgate Rd NW
Silverdale WA 98383
(360) 692-6128
www.sjimech.com

DONALD CLAYTON ATKINS
STATE OF WASHINGTON
52745
REGISTERED
PROFESSIONAL ENGINEER

3700 E MERCER WAY
BARNABIE POINT PROJECT

NO.	DATE	DESCRIPTION
2	11.25.2025	PEER REVIEW COMMENTS

4 JUNE 2025
BUILDING PERMIT

PROJECT: 497

PLUMBING LEVEL 02 WASTE & VENT

P2.02.1

12/15/2025 9:08:03 AM E:\Revit Temp\497 Barnabie Point School_ Plumbing (R2024)_dbrogs.rvt
© ANJALI GRANT DESIGN LLC ORIGINAL SHEET SIZE: 24" X 36"

Copyright ©, Stirrett-Johnsen, Inc., Silverdale, Washington 2018. License to use this design is limited to construction of its particular subject. Authority to retain copies or any derivatives such as shop drawings is limited to one set for record purposes. This design was produced assuming construction by Stirrett Johnsen field forces and an expectation that field conditions may require adjustment which would be coordinated with, or by, those field forces.

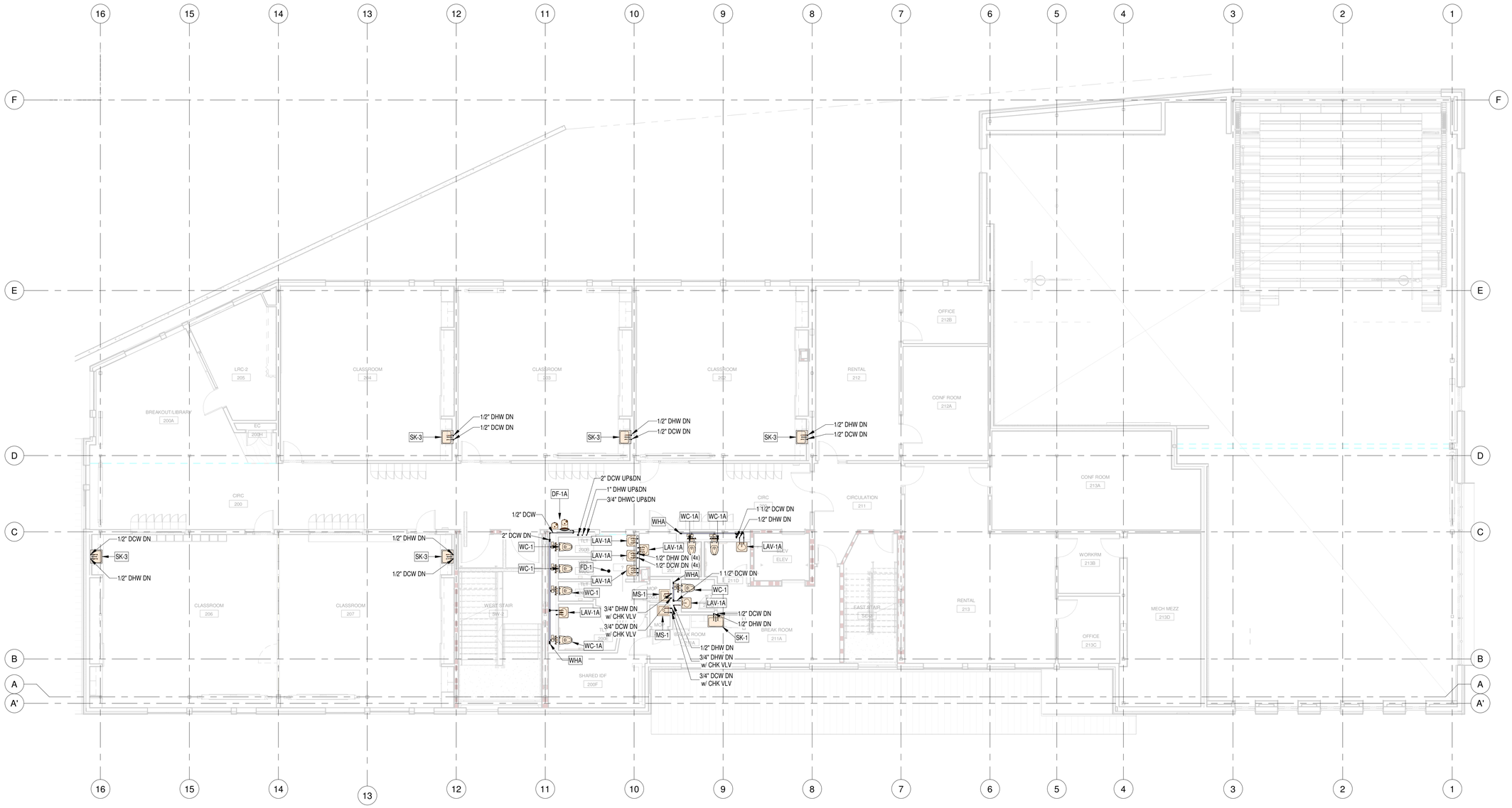

PLUMBING LEVEL 02 DOMESTIC WATER
1/8" = 1'-0"

GENERAL NOTES:

1) DOMESTIC WATER CONNECTIONS TO SINKS & LAVS SHALL BE 1/2" U.N.O.

2) DOMESTIC WATER PIPE 2-1/2" & LARGER TO BE STAINLESS STEEL.

3) DOMESTIC WATER PIPE 2" & SMALLER TO BE PEX.

EXCEPTION: WATER HEATER PIPING 2" & SMALLER WITHIN MECHANICAL SPACE TO BE COPPER. SEE DETAIL 1 / P3.00.

Stirrett Johnsen INC.
MECHANICAL CONTRACTORS
5555 Westgate Rd NW
Silverdale WA 98383
(360) 692-6128
www.sjimech.com

DAVID CLAYTON ATKINSON
STATE OF WASHINGTON
52745
REGISTERED
PROFESSIONAL ENGINEER

3700 E MERCER WAY
BARNABIE POINT PROJECT

NO.	DATE	DESCRIPTION
2	11.25.2025	PEER REVIEW COMMENTS

4 JUNE 2025
BUILDING PERMIT

PROJECT: 497

PLUMBING LEVEL 02
DOMESTIC WATER

P2.02.2

12/12/2025 9:08:06 AM E:\Revit Temp\497-Barnabie Point School _ Plumbing (R2024)_bbrogs.rvt
© ANJALI GRANT DESIGN LLC ORIGINAL SHEET SIZE: 24" X 36"

Copyright ©, Stirrett-Johnsen, Inc., Silverdale, Washington 2018. License to use this design is limited to construction of its particular subject. Authority to retain copies or any derivatives such as shop drawings is limited to one set for record purposes. This design was produced assuming construction by Stirrett Johnsen field forces and an expectation that field conditions may require adjustment which would be coordinated with, or by, those field forces.

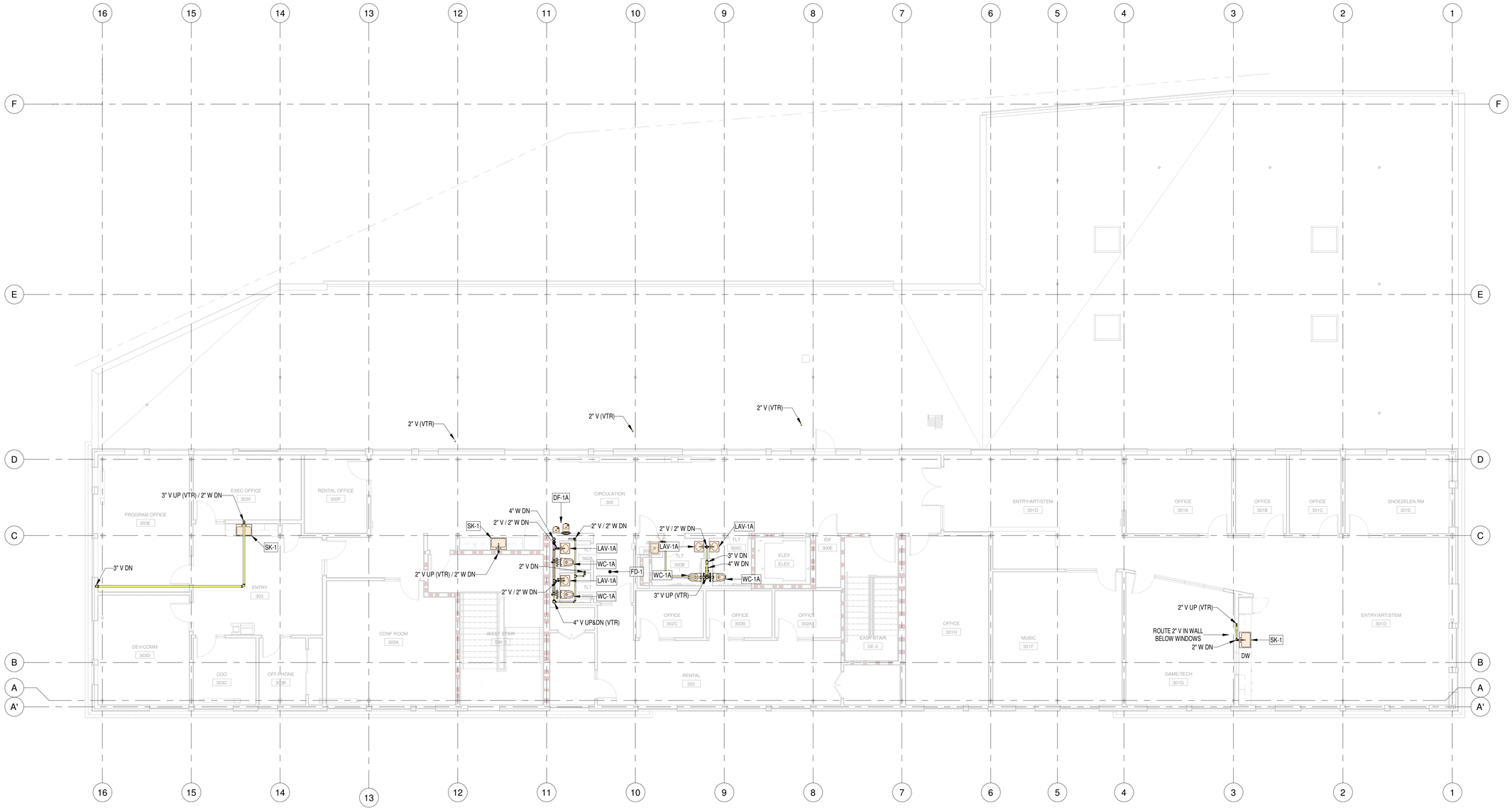

PLUMBING LEVEL 03 WASTE & VENT
1/8" = 1'-0"

GENERAL NOTES:

1) ALL WASTE (W) PIPING SHALL BE RUN AT 1/4" SLOPE U.N.O.
2) ALL VENT (V) PIPING SHALL HAVE THEIR INVERT TAKEN OFF ABOVE THE DRAINAGE CENTERLINE.
3) ALL RAINLEADER (RL) PIPING SHALL BE RUN AT 1/8" SLOPE U.N.O.

Stirrett Johnsen INC.
MECHANICAL CONTRACTORS
5555 Westgate Rd NW
Silverdale WA 98383
(360) 692-6128
www.sjimech.com

DAVID CLAYTON ATKINSON
STATE OF WASHINGTON
52745
REGISTERED
PROFESSIONAL ENGINEER

3700 E MERCER WAY
BARNABIE POINT PROJECT

NO.	DATE	DESCRIPTION
2	11.25.2025	PEER REVIEW COMMENTS

4 JUNE 2025
BUILDING PERMIT

PROJECT: 497

PLUMBING LEVEL 03 WASTE & VENT

P2.03.1

12/12/2025 9:08:07 AM E:\Revit Temp\497-Barnabie Point School_ Plumbing (R2024)_bbrogs.rvt
© ANJALI GRANT DESIGN LLC ORIGINAL SHEET SIZE: 24" X 36"

Copyright ©, Stirrett-Johnsen, Inc., Silverdale, Washington 2018. License to use this design is limited to construction of its particular subject. Authority to retain copies or any derivatives such as shop drawings is limited to one set for record purposes. This design was produced assuming construction by Stirrett Johnsen field forces and an expectation that field conditions may require adjustment which would be coordinated with, or by, those field forces.

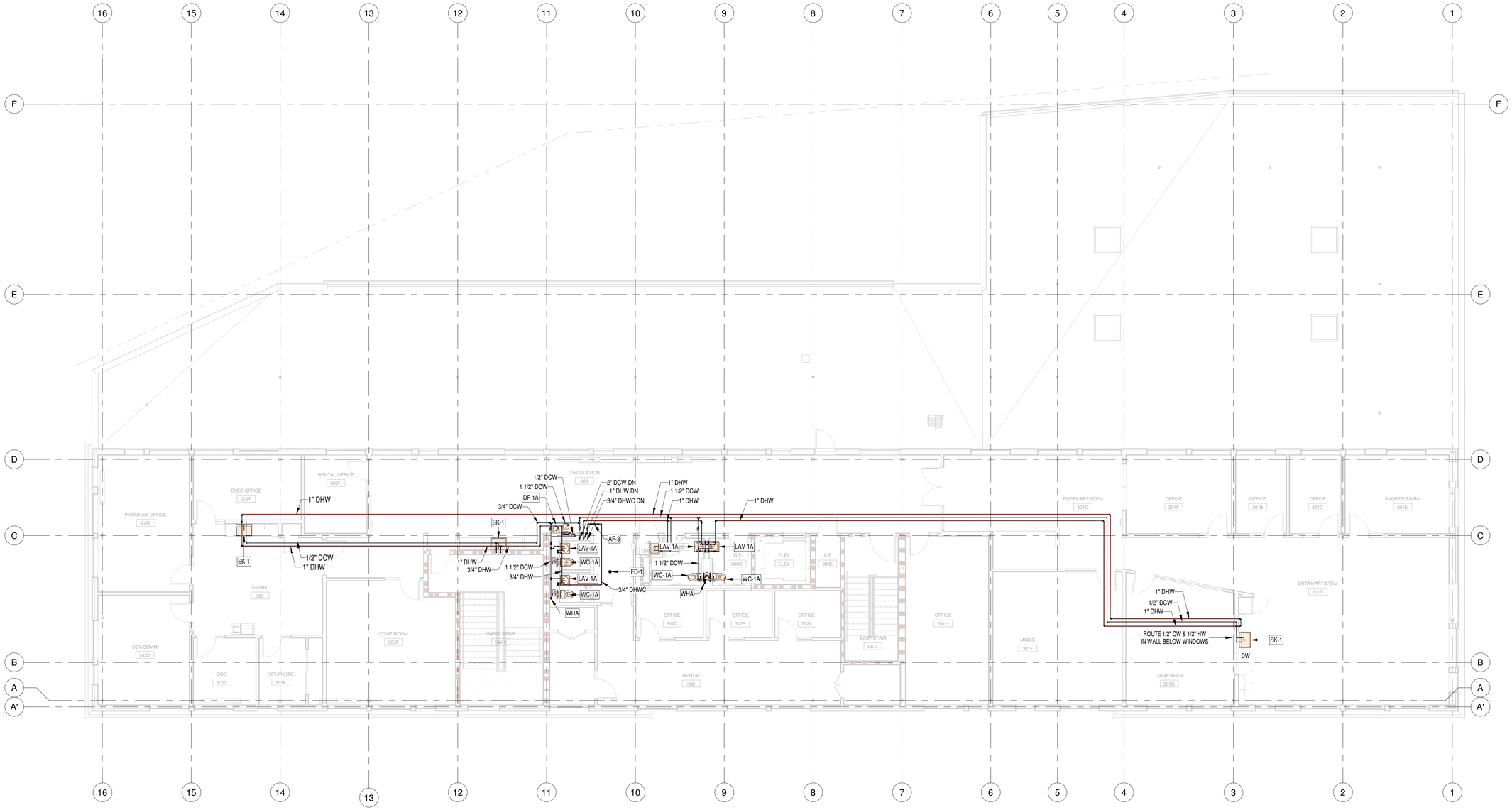

PLUMBING LEVEL 03 DOMESTIC WATER
1/8" = 1'-0"

GENERAL NOTES:

1) DOMESTIC WATER CONNECTIONS TO SINKS & LAVS SHALL BE 1/2" U.N.O.

2) DOMESTIC WATER PIPE 2-1/2" & LARGER TO BE STAINLESS STEEL.

3) DOMESTIC WATER PIPE 2" & SMALLER TO BE PEX.

EXCEPTION: WATER HEATER PIPING 2" & SMALLER WITHIN MECHANICAL SPACE TO BE COPPER. SEE DETAIL 1 / P3.00.

Stirrett Johnsen INC.
MECHANICAL CONTRACTORS
5555 Westgate Rd NW
Silverdale WA 98383
(360) 692-6128
www.sjimech.com

DAVID CLAYTON ATKINSON
STATE OF WASHINGTON
52745
REGISTERED
PROFESSIONAL ENGINEER

3700 E MERCER WAY
BARNABIE POINT PROJECT

NO.	DATE	DESCRIPTION
2	11.25.2025	PEER REVIEW COMMENTS

4 JUNE 2025
BUILDING PERMIT

PROJECT: 497

PLUMBING LEVEL 03
DOMESTIC WATER

P2.03.2

12/12/2025 9:08:09 AM E:\Revit Temp\497-Barnabie Point School _ Plumbing (R2024)_bbrogs.rvt
© ANJALI GRANT DESIGN LLC ORIGINAL SHEET SIZE: 24" X 36"

Copyright©, Stirrett-Johnsen, Inc., Silverdale, Washington 2018. License to use this design is limited to construction of its particular subject. Authority to retain copies or any derivatives such as shop drawings is limited to one set for record purposes. This design was produced assuming construction by Stirrett Johnsen field forces and an expectation that field conditions may require adjustment which would be coordinated with, or by, those field forces.

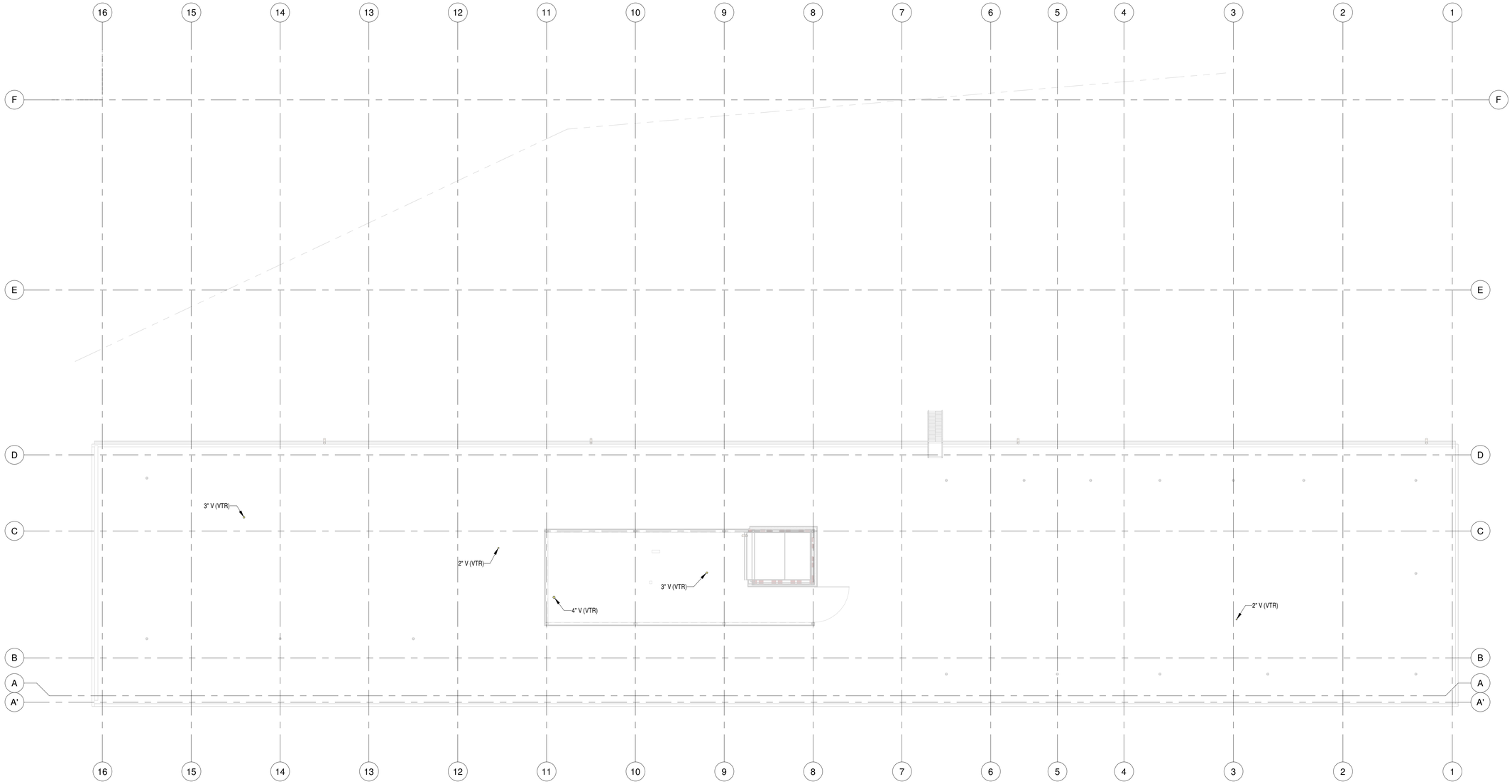

PLUMBING ROOF LEVEL
1/8" = 1'-0"

Stirrett Johnsen INC.
MECHANICAL CONTRACTORS
5555 Westgate Rd NW
Silverdale WA 98383
(360) 692-6128
www.sjimech.com

DAVID CLAYTON ATKINSON
STATE OF WASHINGTON
52745
REGISTERED
PROFESSIONAL ENGINEER

3700 E MERCER WAY
BARNABIE POINT PROJECT

NO.	DATE	DESCRIPTION
2	11.25.2025	PEER REVIEW COMMENTS

4 JUNE 2025
BUILDING PERMIT

PROJECT: 497

PLUMBING ROOF LEVEL

P2.RF

12/12/2025 9:08:10 AM E:\Revit Temp\497-Barnabie Point School _ Plumbing (R2024)_bbroga.rvt
© ANJALI GRANT DESIGN LLC ORIGINAL SHEET SIZE: 24" X 36"

Copyright©. Stirrett-Johnsen, Inc., Silverdale, Washington 2018. License to use this design is limited to construction of its particular subject. Authority to retain copies or any derivatives such as shop drawings is limited to one set for record purposes. This design was produced assuming construction by Stirrett Johnsen field forces and an expectation that field conditions may require adjustment which would be coordinated with, or by, those field forces.

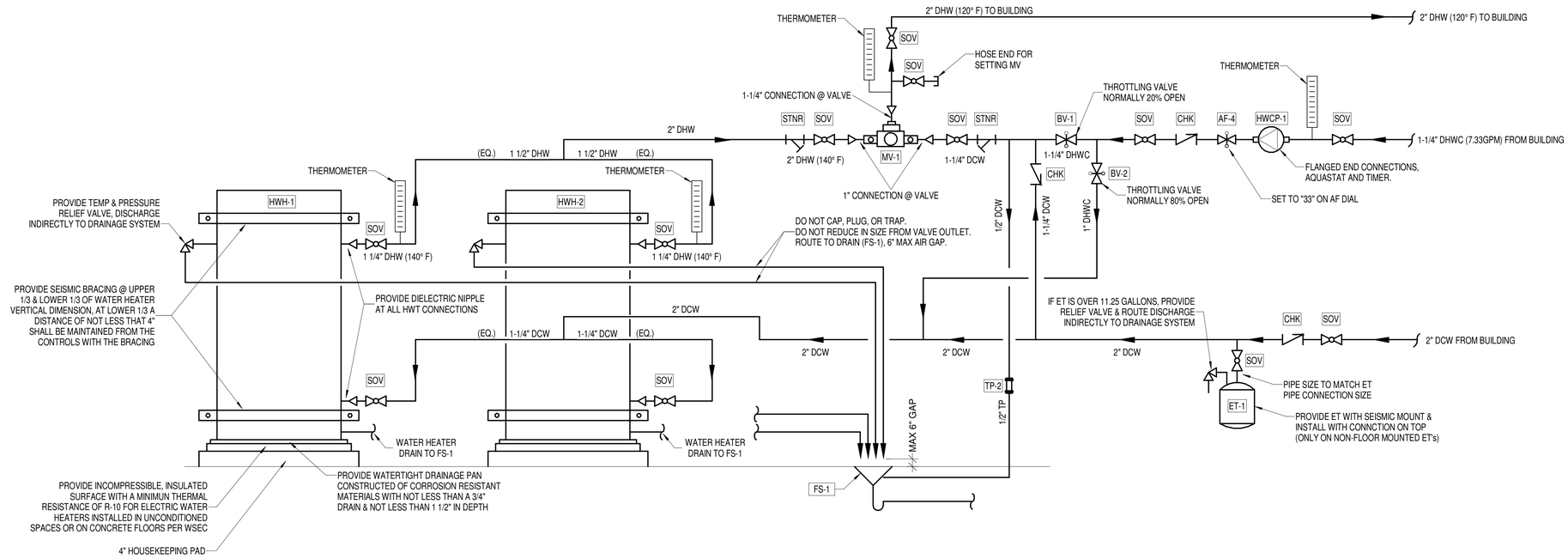

1 P2.B1.2 HOT WATER HEATER PIPING DIAGRAM
N.T.S.

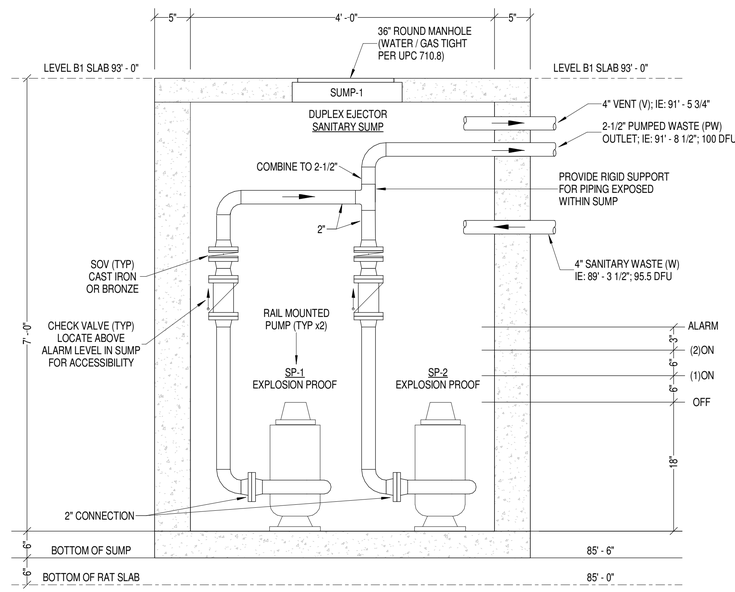

NOTES:
1. ANTICIPATED SANITARY DRAINAGE FLOW IS MAX. 50 GPM.

2 SUMP PUMP DETAIL - SANITARY DRAINAGE (SUMP-1: SP-1 & SP-2)
N.T.S.

GENERAL NOTES:

1) DOMESTIC WATER CONNECTIONS TO SINKS & LAVS SHALL BE 1/2" U.N.O.

2) DOMESTIC WATER PIPE 2-1/2" & LARGER TO BE STAINLESS STEEL.

3) DOMESTIC WATER PIPE 2" & SMALLER TO BE PEX.

EXCEPTION: WATER HEATER PIPING 2" & SMALLER WITHIN MECHANICAL SPACE TO BE COPPER. SEE DETAIL 1 / P3.00.

Stirrett Johnsen INC.
MECHANICAL CONTRACTORS
5555 Westgate Rd NW
Silverdale WA 98383
(360) 692-6128
www.sjimech.com

DAVID CLAYTON ATKINSON
STATE OF WASHINGTON
52745
REGISTERED
PROFESSIONAL ENGINEER

3700 E MERCER WAY
BARNABIE POINT PROJECT

NO.	DATE	DESCRIPTION
2	11.25.2025	PEER REVIEW COMMENTS

4 JUNE 2025
BUILDING PERMIT

PROJECT: 497

PLUMBING DETAILS

P3.00

12/12/2025 9:08:10 AM E:\Revit Temp\497-Barnabie Point School_ Plumbing (R2024)_bkrega.rvt
© ANJALI GRANT DESIGN LLC ORIGINAL SHEET SIZE: 24" X 36"

Copyright©, Stirrett-Johnsen, Inc., Silverdale, Washington 2018. License to use this design is limited to construction of its particular subject. Authority to retain copies or any derivatives such as shop drawings is limited to one set for record purposes. This design was produced assuming construction by Stirrett Johnsen field forces and an expectation that field conditions may require adjustment which would be coordinated with, or by, those field forces.

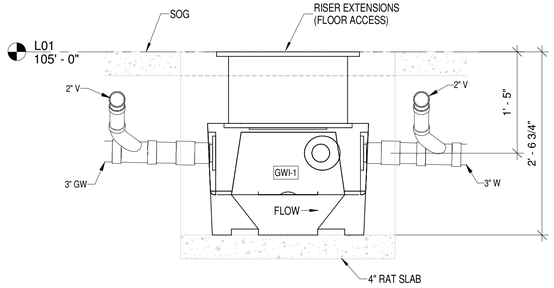

1 GREASE WASTE GWI-1 DETAIL
1" = 1'-0"

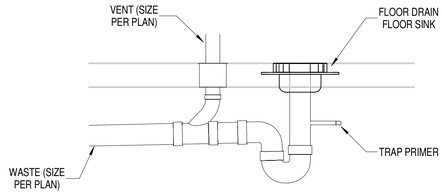

2 FLOOR DRAIN / FLOOR SINK DETAIL
1" = 1'-0"

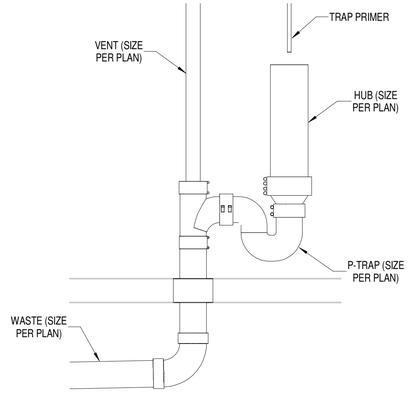

3 HUB DRAIN DETAIL
1" = 1'-0"

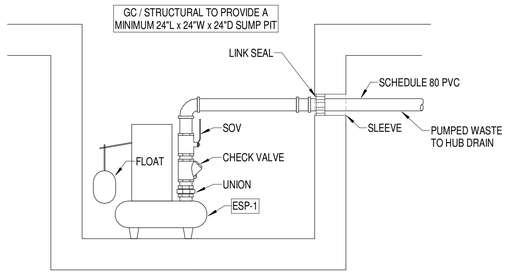

4 ELEVATOR SUMP DETAIL
N.T.S.

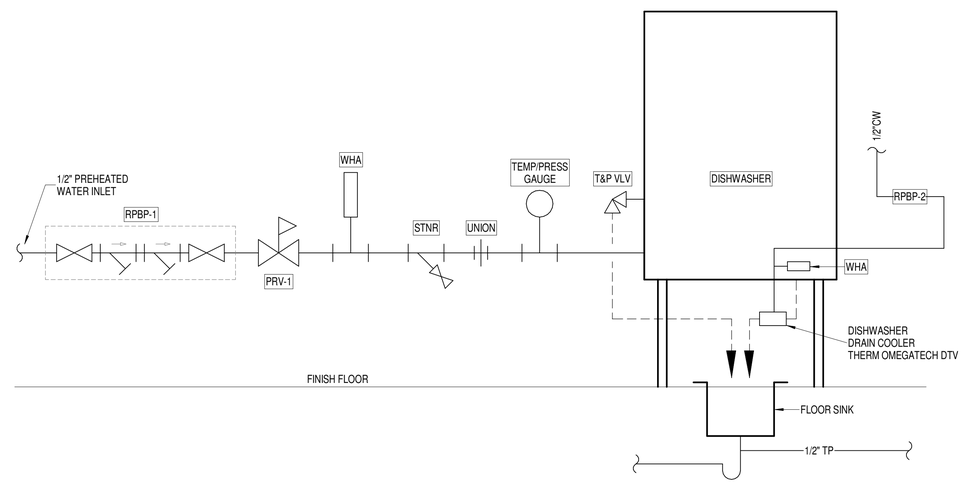

5 COMMERCIAL DISHWASHER CONNECTION DETAIL
N.T.S.

Stirrett Johnsen INC.
MECHANICAL CONTRACTORS
5555 Westgate Rd NW
Silverdale WA 98383
(360) 692-6128
www.sjimech.com

DAVID CLAYTON ATKINS
STATE OF WASHINGTON
52745
REGISTERED
PROFESSIONAL ENGINEER

3700 E MERCER WAY
BARNABIE POINT PROJECT

NO.	DATE	DESCRIPTION
2	11.25.2025	PEER REVIEW COMMENTS

4 JUNE 2025
BUILDING PERMIT

PROJECT: 497

PLUMBING DETAILS

P3.01

12/12/2025 9:08:11 AM E:\Revit Temp\497 Barnabie Point School_ Plumbing (R2024)_bkrega.rvt
© ANJALI GRANT DESIGN LLC ORIGINAL SHEET SIZE: 24" X 36"

Copyright©, Stirrett-Johnsen, Inc., Silverdale, Washington 2018. License to use this design is limited to construction of its particular subject. Authority to retain copies or any derivatives such as shop drawings is limited to one set for record purposes. This design was produced assuming construction by Stirrett Johnsen field forces and an expectation that field conditions may require adjustment which would be coordinated with, or by, those field forces.

CAJ 2342

Classified by Underwriters Laboratories, Inc. to UL 1479

System No. C-AJ-2342

4" (INCH) ABS

F Rating — 3 Hr
T Rating — 0 Hr
W Rating - Class 1 (See Item 3B)
L Rating at Ambient — Less Than 1 CFM/sq ft (See Item 3B)
L Rating at 400 F — Less Than 1 CFM/sq ft (See Item 3B)

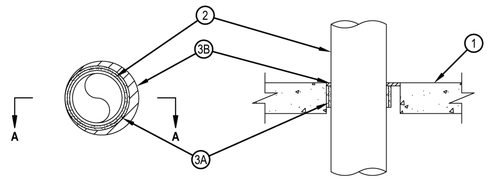

SECTION A-A

1. Floor or Wall Assembly — Min 2-1/2 in. (64 mm) thick reinforced lightweight or normal weight (100-150 pcf or 1600-2400 kg/m3) concrete floor or wall. Wall may also be constructed of any UL Classified Concrete Blocks*. Max diam of opening is 6 in. (152 mm).
   See Concrete Blocks (CAZT) category in the Fire Resistance Directory for names of manufacturers.
2. Through Penetrants — One nonmetallic pipe to be installed concentrically or eccentrically within the firestop system. Annular space within the firestop system is dependent upon the max diam and type of penetrant used as tabulated in Item 3A. Pipe to be rigidly supported on both sides of floor or wall assembly. The following types and sizes of nonmetallic pipes may be used:
   A. Polyvinyl Chloride (PVC) Pipe — Nom 4 in. (102 mm) diam (or smaller) Schedule 40 solid or cellular core PVC for use in closed (process or supply) or vented (drain, waste or vent) piping systems.
   B. Chlorinated Polyvinyl Chloride (CPVC) Pipe — Nom 4 in. (102 mm) diam (or smaller) SDR13.5 CPVC for use in closed (process or supply) piping systems.
   C. Acrylonitrile Butadiene Styrene (ABS) Pipe — Nom 4 in. (102 mm) diam (or smaller) Schedule 40 solid or cellular core ABS for use in closed (process or supply) or vented (drain, waste or vent) piping systems.
   D. Flame Retardant Polypropylene (FRPP) Pipe — Nom 4 in. (102 mm) diam (or smaller) Schedule 40 FRPP pipe for use in closed (process or supply) or vented (drain, waste or vent) piping system.
3. Firestop System — The firestop system shall consist of the following:
   A. Fill, Void or Cavity Material* — Wrap Strip — Layers of intumescent wrap strip are continuously wrapped around the pipe with ends held in place with tape. Wrap strip installed recessed max 1/4 in. (6 mm) from bottom surface of floor or from both surfaces of wall. Size of wrap strip and number of layers for a given size penetrant are shown in table below:
   HILTI CONSTRUCTION CHEMICALS, DIV OF HILTI INC — CP648-E W25/1" or CP648-E W45/1-3/4" Firestop Wrap Strip

Hilti Firestop Systems

Reproduced by HILTI, Inc. Courtesy of Underwriters Laboratories, Inc.
June 24, 2016

CAJ 2342

System No. C-AJ-2342

4" (INCH) ABS

Product Designation	Pipe Size in. (mm)	Max Opening Diam (in.)	Annular Space Min in.(mm)	Annular Space Max in. (mm)	Number of Layers	Nom Wrap Strip Width in. (mm)
CP648-E W25/1"	1 1/2 (38)	3 (76)	3/16 (4.8)	15/16 (24)	1	1 (25)
CP648-E W45/1-3/4*	1 1/2 (38)	3 (76)	3/16 (4.8)	15/16 (24)	1	1 3/4 (45)
CP648-E W25/1"	2 (51)	3 1/2 (89)	3/16 (4.8)	15/16 (24)	1	1 (25)
CP648-E W45/1-3/4*	2 (51)	3 1/2 (89)	3/16 (4.8)	15/16 (24)	1	1 3/4 (45)
CP648-E W45/1-3/4*	3 (76)	4 (102)	3/16 (4.8)	15/16 (24)	1	1 3/4 (45)
CP648-E W45/1-3/4*	3 (76)	5 (127)	3/8 (10)	1 1/16 (27)	2	1 3/4 (45)
CP648-E W45/1-3/4*	4 (102)	6 (152)	3/8 (10)	1 1/8 (29)	2	1 3/4 (45)

A1. Fill, Void or Cavity Material* — Wrap Strip — (As an alternate to the wrap strip in Item 3A) — One layer of intumescent wrap strip is continuously wrapped around the pipe with ends butted and held in place with integrated tape. Wrap strip installed recessed max 1/4 in. (6 mm) from bottom surface of floor or from both surfaces of wall. Size of wrap strip for a given size penetrant are shown in the table below.
HILTI CONSTRUCTION CHEMICALS, DIV OF HILTI INC — CP648-S-1.5" US, CP648-S-2" US, CP648-S-3" US or CP648-S-4" US Wrap Strip

Product Designation	Pipe Size in.(mm)	Max Opening Diam (in.)	Annular Space Min in. (mm)	Annular Space Max in. (mm)	Nom Wrap Strip Length in. (mm)	Nom Wrap Strip Thick in. (mm)	Nom Wrap Strip Width in. (mm)
CP648-S-1.5" US	1 1/2 (38)	3 (76)	3/16 (4.8)	15/16 (24)	6.5 (165)	0.18 (4.6)	1 (25)
CP648-S-2" US	2 (51)	3 1/2 (89)	3/16 (4.8)	15/16 (24)	8 (203)	0.18 (4.6)	1 (25)
CP648-S-3" US	3 (76)	4 (102)	3/16 (4.8)	5/16 (8)	11.5 (292)	0.18 (4.6)	1 3/4 (45)
CP648-S-4" US	4 (102)	6 (152)	3/8 (10)	1 1/8 (29)	15.1 (384)	0.36 (9)	1 3/4 (45)

B. Fill, Void or Cavity Material* — Sealant — Min 1/4 in. (6 mm) thickness of fill material applied within the annulus, flush with top surface of floor of both surfaces of wall. W Rating and/or L Rating applies only when CP 601S, CFS-S SIL GG or CFS-S SIL SL (floors only) Sealant is used.
HILTI CONSTRUCTION CHEMICALS, DIV OF HILTI INC — FS-ONE Sealant, FS-ONE MAX Intumescent Sealant, CP 601S Sealant, CFS-S SIL GG or CFS-S SIL SL (floors only) Sealant

* Indicates such products shall bear the UL or cUL Certification Mark for jurisdictions employing the UL or cUL Certification (such as Canada), respectively.

Hilti Firestop Systems

Reproduced by HILTI, Inc. Courtesy of Underwriters Laboratories, Inc.
June 24, 2016

CAJ 1498

Classified by Underwriters Laboratories, Inc. to UL 1479 and CAN/ULC-S115

System No. C-AJ-1498

COPPER / STEEL / CAST IRON

ANSI/UL1479 (ASTM E814)	CAN/ULC S115
F Rating — 2 Hr	F Rating — 2 Hr
T Rating — 0 Hr	FT Rating — 0 Hr
W Rating — Class 1	FH Rating — 2 Hr
	FTH Rating — 0 Hr

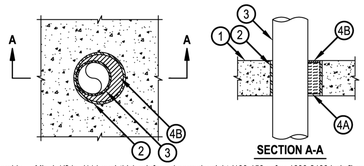

SECTION A-A

1. Floor or Wall Assembly — Min 4-1/2 in. (114 mm) thick reinforced normal weight (100-150 pcf or 1600-2400 kg/m³) concrete. Wall may also be constructed of any UL Classified Concrete Blocks*. Max diam of opening is 10 in. (254 mm).
   See Concrete Blocks (CAZT) category in the Fire Resistance Directory for names of manufacturers.
2. Steel Sleeve — (Optional) - Nom 10 in. (254 mm) diam (or smaller) Schedule 10 (or heavier) steel pipe cast or grouted into floor or wall assembly, flush with both floor or wall surfaces.

2A. Sheet Metal Sleeve — (Optional, Not Shown) Max 6 in. (152 mm) diam, min 26 ga (0.5 mm) galv steel provided with a 26 ga (0.5 mm) galv steel square flange spot welded to the sleeve at approx mid-height, or flush with bottom of sleeve in floors, and sized to be a min of 2 in. (51 mm) larger than the sleeve diam. The sleeve is to be cast in place and may extend a max of 4 in. (102 mm) below the bottom of the floor and a max of 1 in. (25 mm) above the top surface of the concrete floor.

2B. Sheet Metal Sleeve — (Optional, Not Shown) - Max 10 in. (254 mm) diam, min 24 ga (0.6 mm) galv steel provided with a 24 ga (0.6 mm) galv steel square flange spot welded to the sleeve at approx mid-height, or flush with bottom of sleeve in floors, and sized to be a min of 2 in. (51 mm) larger than the sleeve diam. The sleeve is to be cast in place and may extend a max of 4 in. (102 mm) below the bottom of the floor and a max of 1 in. (25 mm) above the top surface of the concrete floor or a min 1 in. (25 mm) on both surfaces of the wall assembly.

3. Through-Penetrant — One metallic pipe, tube or conduit to be installed either concentrically or eccentrically within the firestop system. The annular space between penetrant and periphery of opening shall be min 0 in. (0 mm, point contact) to max 2 in. (51 mm). Penetrant to be rigidly supported on both sides of floor or wall assembly. The following types and sizes of metallic penetrants may be used:
   A. Steel Pipe — Nom 8 in. (203 mm) diam (or smaller) Schedule 10 (or heavier) steel pipe.
   B. Iron Pipe — Nom 8 in. (203 mm) diam (or smaller) cast or ductile iron pipe.
   C. Copper Pipe — Nom 4 in. (102 mm) diam (or smaller) Regular (or heavier) copper pipe.
   D. Copper Tubing — Nom 4 in. (102 mm) diam (or smaller) Type L (or heavier) copper tubing.
   E. Conduit — Nom 6 in. diam (152 mm) (or smaller) rigid steel conduit.
   F. Conduit — Nom 4 in. diam (102 mm) (or smaller) steel electrical metallic tubing (EMT).
4. Firestop System — The firestop system shall consist of the following:
   A. Packing Material — Min 4 in. (102 mm) thickness of 4 pcf (64 kg/m³) mineral wool batt insulation tightly packed into the opening as a permanent form. Packing material to be recessed from top surface of floor or both surfaces of wall to accommodate the required thickness of fill material.
   B. Fill, Void or Cavity Material* - Sealant — Min 1/4 in. (6 mm) thickness of fill material applied within the annulus flush with the top surface of the floor or both surfaces of the wall.
   HILTI CONSTRUCTION CHEMICALS, DIV OF HILTI INC — CFS-S SIL GG, CFS-S SIL SL (floors only) or CP 601S Sealant

*Bearing the UL Classification Mark

Hilti Firestop Systems

Reproduced by HILTI, Inc. Courtesy of Underwriters Laboratories, Inc.
December 20, 2013

CAJ 2827

Classified by Underwriters Laboratories, Inc. to UL 1479

System No. C-AJ-2827

PEX

F Rating - 2 Hr
T Rating - 3/4 Hr
L Rating At Ambient - Less Than 1 CFM/sq ft
L Rating At 400 F - 4 CFM/sq ft
W Rating - Class 1 (See Item 3C)

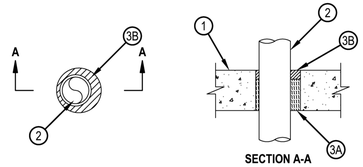

SECTION A-A

1. Floor or Wall Assembly — Min 4-1/2 in. (114 mm) thick reinforced lightweight or normal weight (100-150 pcf or 1600-2400 kg/m3) concrete floor or min 5-1/2 in. (140 mm) thick reinforced lightweight or normal weight (100-150 pcf or 1600-2400 kg/m3) concrete wall. Wall may also be constructed of any UL Classified Concrete Blocks*. Floor may also be constructed of any min 6 in. (152 mm) thick UL Classified hollow core Precast Concrete Units. Max diam of opening is 5 in. (127 mm).
   See Concrete Blocks (CAZT) and Precast Concrete Units* (CFTV) categories in the Fire Resistance Directory for names of manufacturers.
2. Through Penetrants — One nonmetallic pipe to be installed either concentrically or eccentrically within the firestop system. The annular space between pipe and periphery of opening shall be min 3/8 in. (9.5 mm) to max 1-1/8 in. (29 mm). Pipe to be rigidly supported on both sides of floor or wall assembly. The following types and sizes of nonmetallic pipes may be used:
   A. Crosslinked Polyethylene (PEX) Tubing — Nom 3 in. (76 mm) diam (or smaller) SDR 9 PEX tubing for use in closed (process or supply) piping systems.
3. Firestop System — The firestop system shall consist of the following:
   A. Packing Material — Min 3-1/2 in. (89 mm) thickness of min 4 pcf (64 kg/m3) mineral wool batt insulation firmly packed into opening as a permanent form. Packing material to be recessed from top surface of floor or both surfaces of wall to accommodate the required thickness of fill material. When precast concrete units are used, packing material to be recessed from top surface of floor to accommodate the required thickness of fill material and to be installed flush with bottom surface of floor.
   B. Fill, Void or Cavity Material* - Sealant — Min 1 in. (25 mm) thickness of fill material applied within the annulus, flush with top surface of floor or both surfaces of wall assembly. When W Rating is required, the 1 in. (25 mm) depth of fill material shall be recessed 1/4 in. (6 mm) below top surface of floor to accommodate additional sealant (Item 3C).
   HILTI CONSTRUCTION CHEMICALS, DIV OF HILTI INC — FS-ONE MAX Intumescent Sealant
   C. Fill, Void or Cavity Material* — Sealant — (Optional, Not Shown) — To attain the W Rating, the FS-ONE MAX Sealant (Item 3B) to be recessed 1/4 in. (6 mm) from the top surface of the floor, and min 1/4 in. (6 mm) thickness of the CFS-S SIL GG or SL sealant installed within annular space flush with top surface of floor. W Rating applies only when CFS-S SIL GG or CFS-S SIL SL (floors only) Sealant is used.
   HILTI CONSTRUCTION CHEMICALS, DIV OF HILTI INC — CFS-S SIL GG or CFS-S SIL SL (floors only) Sealant

* Indicates such products shall bear the UL or cUL Certification Mark for jurisdictions employing the UL or cUL Certification (such as Canada), respectively.

Hilti Firestop Systems

Reproduced by HILTI, Inc. Courtesy of Underwriters Laboratories, Inc.
July 10, 2018

Stirrett Johnsen INC.
MECHANICAL CONTRACTORS
5555 Westgate Rd NW
Silverdale WA 98383
(360) 692-6128
www.sjimech.com

DAVID CLAYTON ATKINSON — STATE OF WASHINGTON — 52745 — REGISTERED PROFESSIONAL ENGINEER

3700 E MERCER WAY
BARNABIE POINT PROJECT

NO.	DATE	DESCRIPTION
2	11.25.2025	PEER REVIEW COMMENTS

4 JUNE 2025
BUILDING PERMIT

PROJECT: 497

PLUMBING DETAILS

P3.02

12/12/2025 9:08:12 AM E:\Revit Temp\497-Barnabie Point School_ Plumbing (R2024)_bkrega.rvt
© ANJALI GRANT DESIGN LLC ORIGINAL SHEET SIZE: 24" X 36"

Copyright©, Stirrett-Johnsen, Inc., Silverdale, Washington 2018. License to use this design is limited to construction of its particular subject. Authority to retain copies or any derivatives such as shop drawings is limited to one set for record purposes. This design was produced assuming construction by Stirrett Johnsen field forces and an expectation that field conditions may require adjustment which would be coordinated with, or by, those field forces.

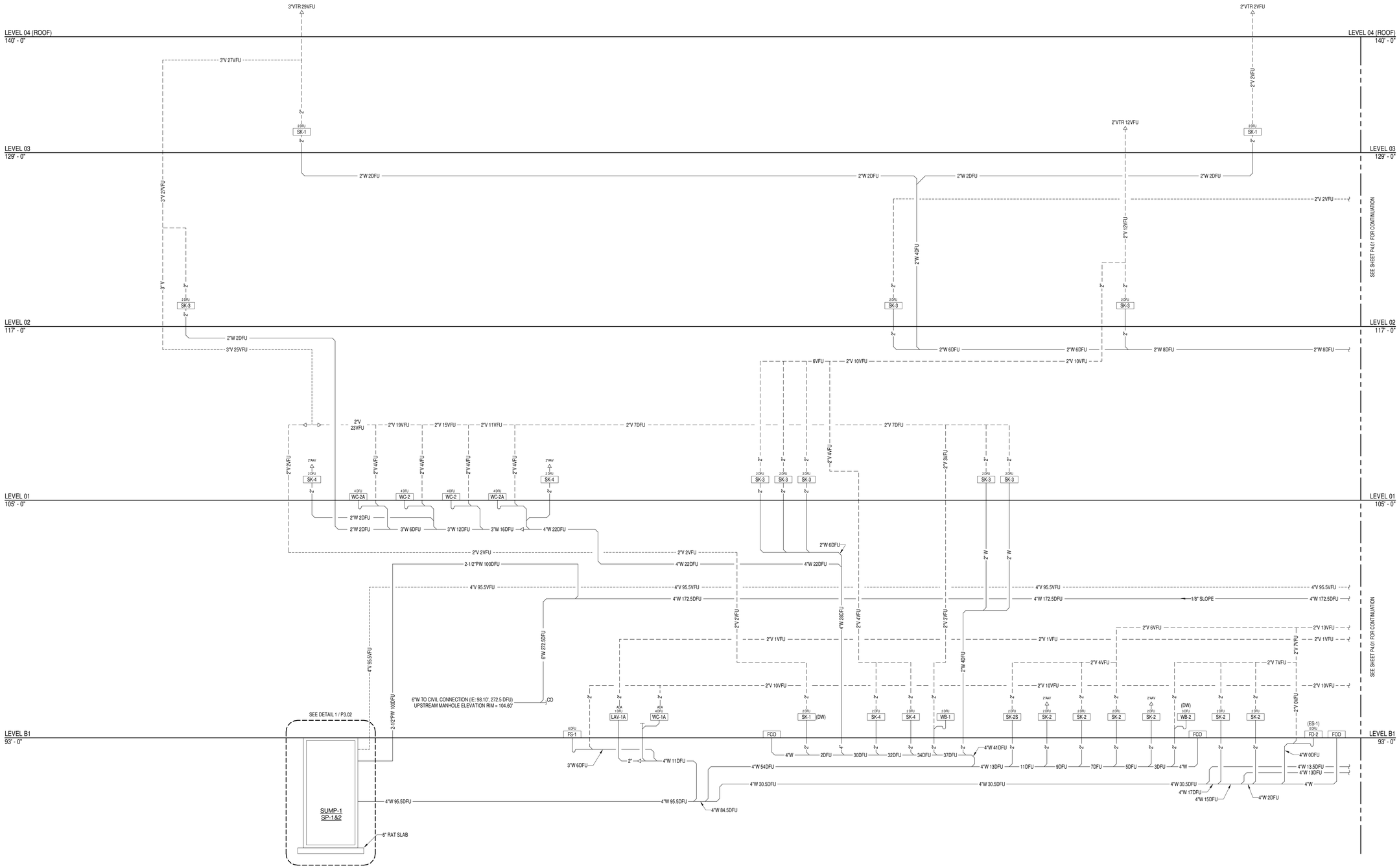

1 PLUMBING WASTE & VENT RISER DIAGRAM (WEST)
N.T.S.

12/12/2025 9:08:12 AM E:\Revit Temp\497 Barnabie Point School _ Plumbing (R2624)_Jkmoga.rvt
© ANJALI GRANT DESIGN LLC ORIGINAL SHEET SIZE: 24" X 36"

Stirrett Johnsen INC.
MECHANICAL CONTRACTORS
5555 Westgate Rd NW
Silverdale WA 98383
(360) 692-6128
www.sjimech.com

DAVID CLAYTON ATKINSON
STATE OF WASHINGTON
52745
REGISTERED
PROFESSIONAL ENGINEER

3700 E MERCER WAY
BARNABIE POINT PROJECT

NO.	DATE	DESCRIPTION
2	11.25.2025	PEER REVIEW COMMENTS

4 JUNE 2025
BUILDING PERMIT

PROJECT: 497

WASTE & VENT RISER DIAGRAM (WEST)

P4.00

Copyright©. Stirrett-Johnsen, Inc., Silverdale, Washington 2018. License to use this design is limited to construction of its particular subject. Authority to retain copies or any derivatives such as shop drawings is limited to one set for record purposes. This design was produced assuming construction by Stirrett Johnsen field forces and an expectation that field conditions may require adjustment which would be coordinated with, or by, those field forces.

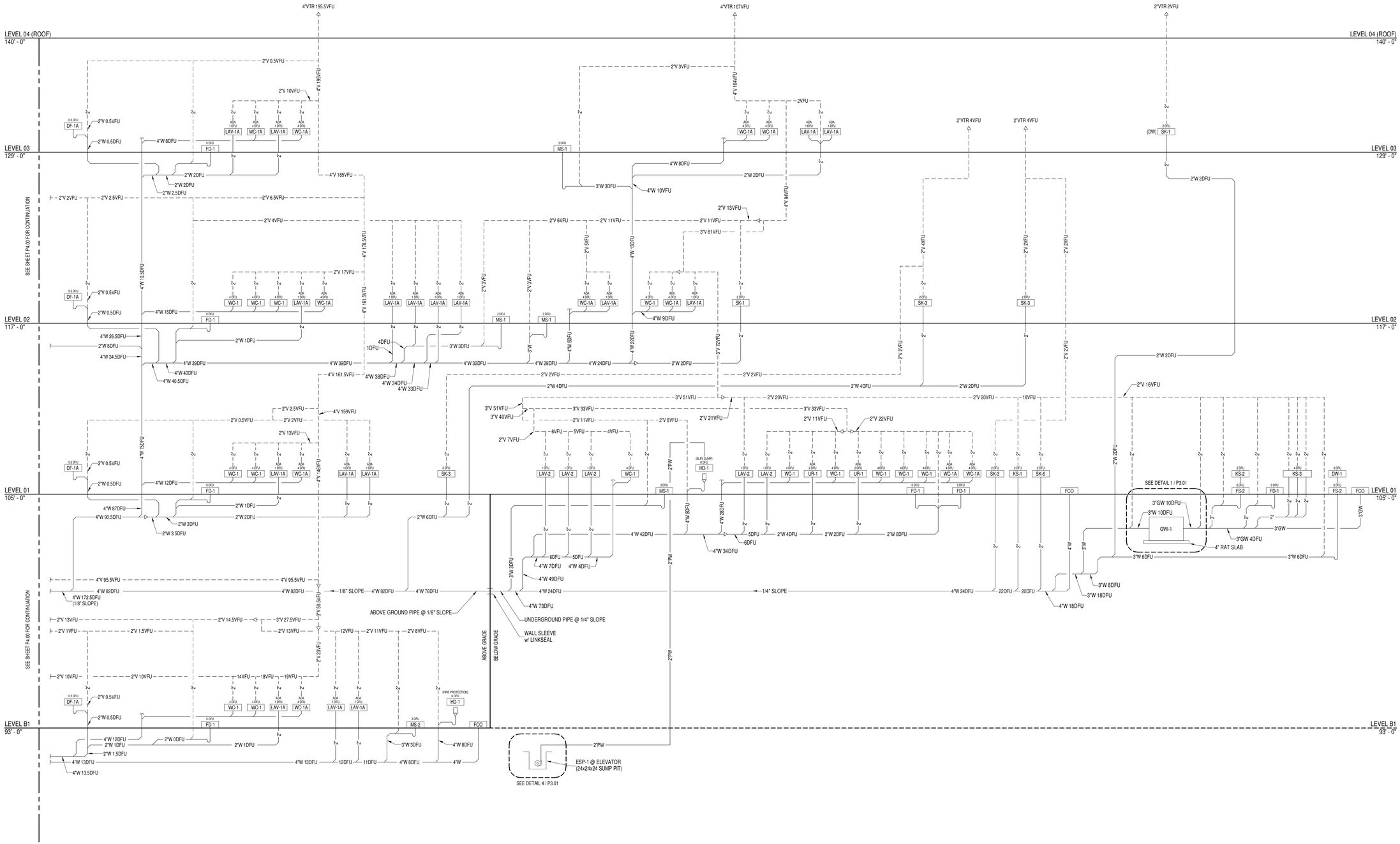

1 PLUMBING WASTE & VENT RISER DIAGRAM (EAST)
N.T.S.

Stirrett Johnsen INC.
MECHANICAL CONTRACTORS
5555 Westgate Rd NW
Silverdale WA 98383
(360) 692-6128
www.sjimech.com

DAVID CLAYTON ATKINSON
STATE OF WASHINGTON
52745
REGISTERED
PROFESSIONAL ENGINEER

3700 E MERCER WAY
BARNABIE POINT PROJECT

NO.	DATE	DESCRIPTION
2	11.25.2025	PEER REVIEW COMMENTS

4 JUNE 2025
BUILDING PERMIT

PROJECT: 497

WASTE & VENT RISER DIAGRAM (EAST)

P4.01

12/12/2025 9:08:12 AM E:\Revit Temp\497 Barnabie Point School _ Plumbing (R2024)_bmogis.rvt
© ANJALI GRANT DESIGN LLC ORIGINAL SHEET SIZE: 24" X 36"

Copyright ©, Stirrett-Johnsen, Inc., Silverdale, Washington 2018. License to use this design is limited to construction of its particular subject. Authority to retain copies or any derivatives such as shop drawings is limited to one set for record purposes. This design was produced assuming construction by Stirrett Johnsen field forces and an expectation that field conditions may require adjustment which would be coordinated with, or by, those field forces.

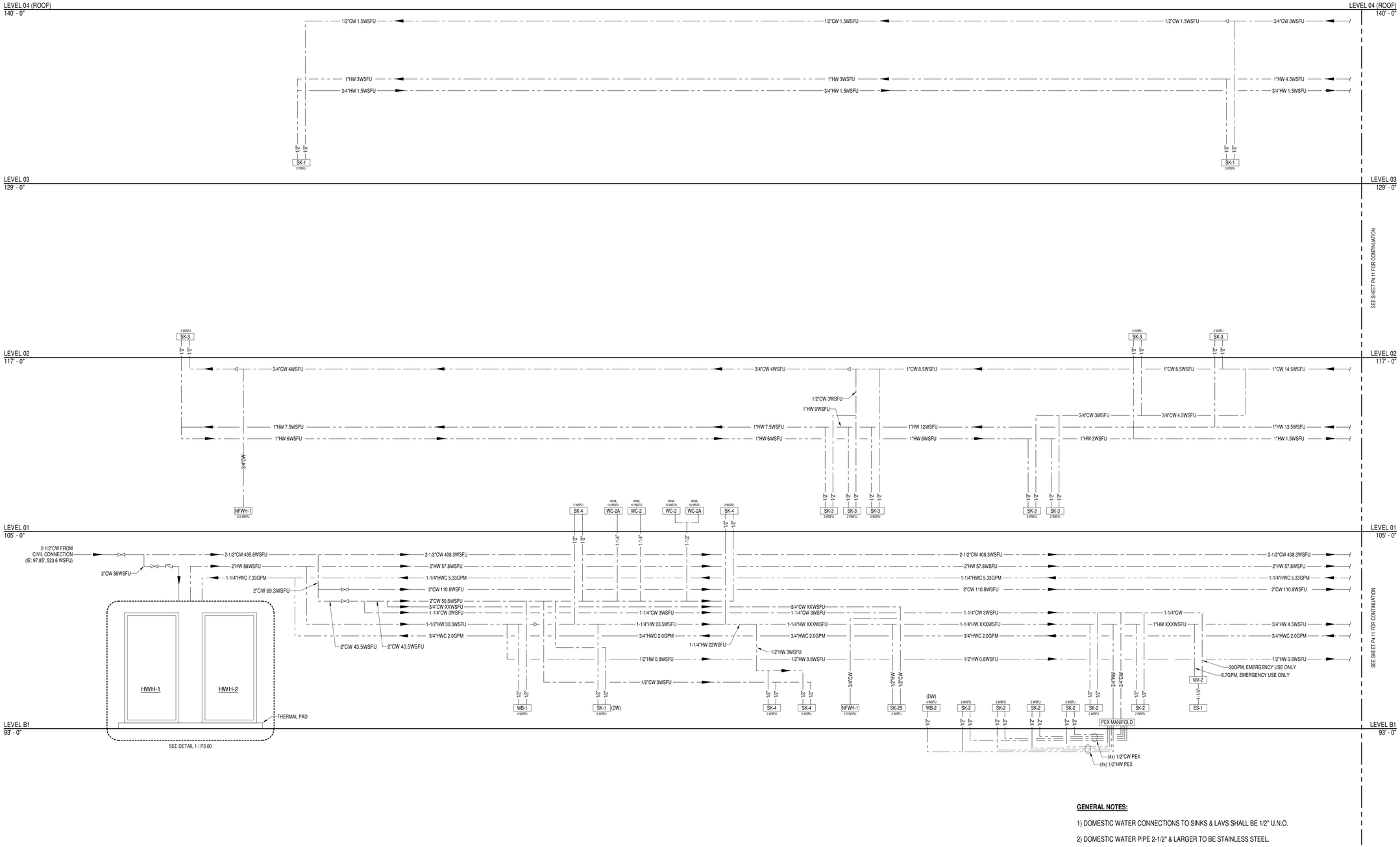

GENERAL NOTES:

1) DOMESTIC WATER CONNECTIONS TO SINKS & LAVS SHALL BE 1/2" U.N.O.

2) DOMESTIC WATER PIPE 2-1/2" & LARGER TO BE STAINLESS STEEL.

3) DOMESTIC WATER PIPE 2" & SMALLER TO BE PEX.

EXCEPTION: WATER HEATER PIPING 2" & SMALLER WITHIN MECHANICAL SPACE TO BE COPPER. SEE DETAIL 1 / P3.00.

1 PLUMBING DOMESTIC WATER RISER DIAGRAM (WEST)
N.T.S.

Stirrett Johnsen INC.
MECHANICAL CONTRACTORS
5555 Westgate Rd NW
Silverdale WA 98383
(360) 692-6128
www.sjimech.com

DAVID CLAYTON ATKINSON
STATE OF WASHINGTON
52745
REGISTERED PROFESSIONAL ENGINEER

3700 E MERCER WAY
BARNABIE POINT PROJECT

NO.	DATE	DESCRIPTION
2	11.25.2025	PEER REVIEW COMMENTS

4 JUNE 2025
BUILDING PERMIT

PROJECT: 497

DOMESTIC WATER RISER DIAGRAM (WEST)

P4.10

12/12/2025 9:08:12 AM E:\Revit Temp\497-Barnabie Point School _ Plumbing (R2024)_jbrogs.rvt
© ANJALI GRANT DESIGN LLC ORIGINAL SHEET SIZE: 24" X 36"

Copyright ©, Stirrett–Johnsen, Inc., Silverdale, Washington 2018. License to use this design is limited to construction of its particular subject. Authority to retain copies or any derivatives such as shop drawings is limited to one set for record purposes. This design was produced assuming construction by Stirrett Johnsen field forces and an expectation that field conditions may require adjustment which would be coordinated with, or by, those field forces.

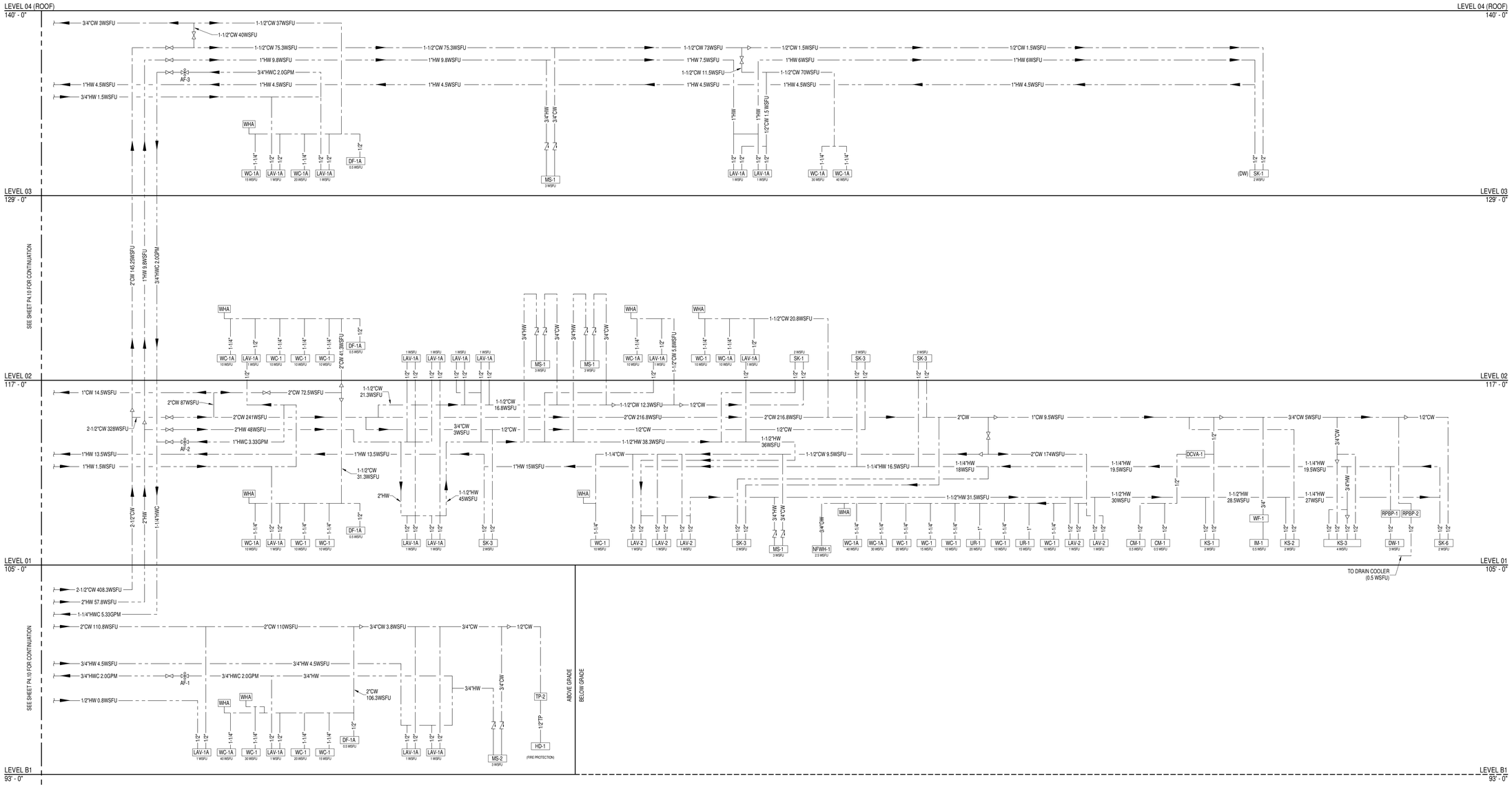

GENERAL NOTES:

1) DOMESTIC WATER CONNECTIONS TO SINKS & LAVS SHALL BE 1/2" U.N.O.

2) DOMESTIC WATER PIPE 2-1/2" & LARGER TO BE STAINLESS STEEL.

3) DOMESTIC WATER PIPE 2" & SMALLER TO BE PEX.

EXCEPTION: WATER HEATER PIPING 2" & SMALLER WITHIN MECHANICAL SPACE TO BE COPPER. SEE DETAIL 1 / P3.00.

1 PLUMBING DOMESTIC WATER RISER DIAGRAM (EAST)

N.T.S.

Stirrett Johnsen INC.
MECHANICAL CONTRACTORS
5555 Westgate Rd NW
Silverdale WA 98383
(360) 692-6128
www.sjimech.com

DAVID CLAYTON ATKINSON
STATE OF WASHINGTON
52745
REGISTERED PROFESSIONAL ENGINEER

3700 E MERCER WAY
BARNABIE POINT PROJECT

NO.	DATE	DESCRIPTION
2	11.25.2025	PEER REVIEW COMMENTS

4 JUNE 2025
BUILDING PERMIT

PROJECT: 497

DOMESTIC WATER RISER DIAGRAM (EAST)

P4.11

12/12/2025 9:08:12 AM E:\Revit Temp\497-Barnabie Point School _ Plumbing (R2024)_bbroga.rvt
© ANJALI GRANT DESIGN LLC ORIGINAL SHEET SIZE: 24" X 36"

ABBREVIATIONS (MECHANICAL)

/FW–X	WITH FIRE RATED WRAP (X=HR RATING)	HRWR	HEAT RECOVERY WATER RETURN
/FWG–X	WITH FIRE RATED WRAP GREASE (X=HR RATING)	HRWS	HEAT RECOVERY WATER SUPPLY
/R–X	WITH WRAP (X=R VALUE)	HVAC	HEATING VENTILATION AIR CONDITIONING
AAV	AUTOMATIC AIR VENT	HWC	HOT WATER COIL
ABV	ABOVE	HWR	HOT WATER RETURN
AC	AIR CONDITIONER	HWS	HOT WATER SUPPLY
ACC	AIR COOLED CONDENSER	HX	HEAT EXCHANGER
AD	ACCESS DOOR	ID	INSIDE DIAMETER/DIMENSION
AFF	ABOVE FINISHED FLOOR	IE	INVERT ELEVATION
AHU	AIR HANDLING UNIT	INS	INSULATION
AL	ALUMINUM	KE	KITCHEN EXHAUST
AP	ACCESS PANEL	KH	KITCHEN HOOD
B	BOILER	LAT	LEAVING AIR TEMPERATURE
BAS	BUILDING AUTOMATION SYSTEM	LBS	POUNDS
BDD	BACK DRAFT DAMPER	LPS	LOW PRESSURE STEAM
BEL	BELOW	LWT	LEAVING WATER TEMPERATURE
BFV	BUTTERFLY VALVE	M	METER
BHP	BRAKE HORSE POWER	M.C.	MECHANICAL CONTRACTOR
BOD	BOTTOM OF DUCT	MAV	MANUAL AIR VENT
BOI	BOTTOM OF INSULATION	MAX	MAXIMUM
BOP	BOTTOM OF PIPE	MBH	THOUSANDS BTU/HR
BOS	BOTTOM OF STEEL	MCA	MINIMUM CIRCUIT AMPACITY
BOU	BOTTOM OF UNIT	MD	MOTORIZED DAMPER
BP	BOOSTER PUMP	MER	MECHANICAL EQUIPMENT ROOM
BTU	BRITISH THERMAL UNITS	MIN	MINIMUM
BTUH	BRITISH THERMAL UNITS PER HOUR	MPG	MEDIUM PRESSURE GAS
BV	BALANCE VALVE, BALL VALVE	MUA	MAKE UP AIR
C.C.	CONTROLS CONTRACTOR	MV	MOTORIZED VALVE
CA	COMPRESSED AIR	MVD	MANUAL VOLUME DAMPER
CBDD	COUNTER–BALANCED BACK DRAFT DAMPER	NC	NORMALLY CLOSED
CC	COOLING COIL	NIC	NOT IN CONTRACT
CFF	CAPPED FOR FUTURE	NO	NORMALLY OPEN
CFM	CUBIC FEET PER MINUTE	NO2	NITROGEN DIOXIDE
CHWR	CHILLED WATER RETURN	NTS	NOT TO SCALE
CHWS	CHILLED WATER SUPPLY	OA	OUTSIDE AIR
CI	CAST IRON	OBD	OPPOSED BLADE DAMPER
CO	CLEANOUT, CARBON MONOXIDE	OCWR	OPEN CONDENSER WATER RETURN
CO2	CARBON DIOXIDE	OCWS	OPEN CONDENSER WATER SUPPLY
COND	CONDENSATE	OD	OUTSIDE DIAMETER/DIMENSION
CONN	CONNECTION	P	PUMP
CP	CIRCULATING PUMP	P.C.	PLUMBING CONTRACTOR
CS	CLEAN STEAM, CURRENT SWITCH	PC	PUMPED CONDENSATE
CT	COOLING TOWER	PCU	POLLUTION CONTROL UNIT
CU	CONDENSING UNIT	PCWR	PROCESS COOLING WATER RETURN
CV	CHECK VALVE	PCWS	PROCESS COOLING WATER SUPPLY
CWR	CONDENSER WATER RETURN	PHWR	PROCESS HEATING WATER RETURN
CWS	CONDENSER WATER SUPPLY	PHWS	PROCESS HEATING WATER SUPPLY
D	DROP (DOWN IN ELEVATION)	PI	PRESSURE INDICATOR
DB	DRY BULB, DUCTBOARD	POC	POINT OF CONNECTION
DBP	DOUBLE BOOSTER PUMP	PRIM	PRIMARY
DCVA	DOUBLE CHECK VALVE ASSEMBLY	PRV	PRESSURE REDUCING VALVE
DC	DUST COLLECTION	PS	PRESSURE SENSOR
DE	DRYER EXHAUST	PSI	POUNDS PER SQUARE INCH
DEMO	DEMOLITION	PT	PRESSURE TEMPERATURE TRAP (PETE'S PLUG)
DH	DUCT HEATER	RV	RELIEF VENT
DN	DOWN (THROUGH FLOOR BELOW)	R	RISE (UP IN ELEVATION)
DPT	DIFFERENTIAL PRESSURE TRANSMITTER	RA	RETURN AIR
DWG	DRAWING	RELF	RELIEF AIR
DXFC	DIRECT EXPANSION FAN COIL	RF	RELIEF FAN
E	EXISTING	RL	REFRIGERANT LIQUID
E.C.	ELECTRICAL CONTRACTOR	RODI	REVERSE OSMOSIS DEIONIZED WATER
EA	EACH	RPBA	REDUCED PRESSURE BACK FLOW ASSEMBLY
EAT	ENTERING AIR TEMPERATURE	RS	REFRIGERANT SUCTION
ECH	ELECTRIC CABINET HEATER	RTU	ROOF TOP UNIT
EF	EXHAUST FAN	S	SENSOR
EFF	EFFICIENCY	SA	SUPPLY AIR
ELEV	ELEVATION	SCLP	STEAM CONDENSATE LOW PRESSURE
EMR	ELEVATOR MACHINE ROOM	SCHP	STEAM CONDENSATE
EPF	ELEVATOR PRESSURIZATION FAN	SCMP	STEAM CONDENSATE
EQZR	EQUALIZING LINES	SCPU	STEAM CONDENSATE PUMPED
ESP	EXTERNAL STATIC PRESSURE	SCVT	STEAM CONDENSATE VENT
EUH	ELECTRIC UNIT HEATER	SD	SMOKE DAMPER, SMOKE DETECTOR
EWT	ENTERING WATER TEMPERATURE	SEF	SMOKE EXHAUST FAN
EXH	EXHAUST	SF	SUPPLY FAN
EXHP	EXHAUST PIPING	SL	SOUND LINING
FC	FLEXIBLE CONNECTION, FLUID COOLER	SM	SHEETMETAL
FCU	FAN COIL UNIT	SP	STATIC PRESSURE
FD	FIRE DAMPER, FLOOR DRAIN	SPF	STAIR PRESSURIZATION FAN
FE	FUME EXHAUST	SS	STAINLESS STEEL
FFD	FUNNEL FLOOR DRAIN	ST	SOLVENT TRANSFER, SOUND TRAP
FLA	FULL LOAD AMPS	T	THERMOSTAT
FM	FLOW METER	TA	TRANSFER AIR
FOB	FLAT ON BOTTOM	TBD	TO BE DETERMINED
FOR	FUEL OIL RETURN	TE	TOILET EXHAUST
FOS	FUEL OIL SUPPLY, FLAT ON SIDE	TI	TEMPERATURE INDICATOR, TENANT IMPROVEMENT
FOT	FLAT ON TOP	TOD	TOP OF DUCT
FSD	FIRE SMOKE DAMPER	TOP	TOP OF PIPE
FUT	FUTURE	TOS	TOP OF STEEL
FV	FLOAT VALVE	TOU	TOP OF UNIT
G	LOW PRESSURE GAS	TS	TEMPERATURE SENSOR
G.C.	GENERAL CONTRACTOR	TV'S	TURNING VANES
GPM	GALLONS PER MINUTE	TYP	TYPICAL
GRV	GAS REGULATOR VENT	UP	UP (THROUGH FLOOR ABOVE)
GV	GATE VALVE	VAV	VARIABLE AIR VOLUME
HC	HEATING COIL	VCU	VRF CONDENSING UNIT
HHP	HYDRONIC HEAT PUMP	VD	VOLUME DAMPER
HP	HEAT PUMP, HORSE POWER	VFC	VRF FAN COIL
HPG	HIGH PRESSURE GAS	VFD	VARIABLE FREQUENCY DRIVE
HPS	HIGH PRESSURE STEAM	W/	WITH
HPWR	HEAT PUMP WATER RETURN	WF	WATER FILTER
HPWS	HEAT PUMP WATER SUPPLY	WFI	WATER FOR INJECTION
HRC	HEAT RECOVERY COIL	WM	WATT METER

GRILLES, REGISTERS, DIFFUSERS LEGEND

NOTE: THE "/FD" CALLOUT INDICATES A GRILLE WITH U.L. CLASSIFIED RADIATION DAMPER TO BE INSTALLED IN RATED FLOOR/CEILING OR ROOF/CEILING ASSEMBLIES. USE RUSKIN MODEL CFD. INCLUDE THERMAL INSULATION BLANKET FOR LAY–IN T–BAR CEILINGS.

NOTE: ALL SUPPLY DIFFUSERS ARE TO BE INSTALLED WITH A DIFFUSER CAN W/ PERF DIVIDER, GENSCO REGISTER BOX W/ FLEX COLLAR & DIFF, MODEL COLDC21 OR EQUIV.

NOTE: FOR EXPOSED DUCTWORK WITH SUPPLY EXHAUST GRILLES TAKEOFFS TO BE GRILLE SIZE PLUS 2" TO MATCH GRILLE FRAME.

X"xX" CD CFM	CEILING DIFFUSER (LAY–IN T–BAR CEILING) 4 CORE ADJUSTABLE, WITH FILLER FOR 24" x 24" LAY–IN MODULE TITUS MCD BORDER TYPE 3 – SHOEMAKER 700 MA–0 (USE X"ø RUNOUT)
X"xX" CD/FD CFM	CEILING DIFFUSER WITH RADIATION DAMPER (LAY–IN T–BAR CEILING) SAME AS CD ABOVE WITH RADIATION DAMPER, HR RATING AS NOTED ON PLANS, RADIATION DAMPER TO MATCH DIFFUSER MANUFACTURER (USE X"ø RUNOUT)
X"xX" CD/P CFM	CEILING DIFFUSER (GYPSUM BOARD CEILING) 4 CORE ADJUSTABLE, "V" FRAME TITUS MCD BORDER TYPE 6 – SHOEMAKER MODEL MA–DCF (USE X"ø RUNOUT)
X"xX" CD/PF CFM	CEILING DIFFUSER WITH PERFORATED FACE (LAY–IN T–BAR CEILING) 4 CORE ADJUSTABLE, WITH FILLER FOR 24" x 24" LAY–IN MODULE TITUS PMC BORDER TYPE 3 – SHOEMAKER 825 MA SQUARE COLLAR (USE X" RUNOUT)
X"xX" CSR CFM	CEILING SUPPLY REGISTER DOUBLE DEFLECTION, HORIZONTAL LONG FRONT BLADES, WITH O.B.D. TITUS MODEL 272RL OBD OPTION – SHOEMAKER 933 OBD OPTION
X"ø VD/P CFM	CEILING VENTILATION DIFFUSER UNIFORM 360° DISCHARGE PATTERN, ADJUSTABLE VENTILATION LIFE BREATH 99–EAG
X"xX" CLF CFM	CEILING LAMINAR FLOW DIFFUSER WITH PERFORATED FACE TITUS TLF–SS – SHOEMAKER 5375, SEE SUBMITTAL FOR OPTIONS
X"xX" ECG CFM	EGGCRATE SUPPLY GRILLE (T–BAR CLG, GYP CLG, DUCT MTD) ALUMINUM EGGCRATE WITH FRAME, 1" x 1" x 1" CORE TITUS 50F – SHOEMAKER 600, SEE SUBMITTAL FOR OPTIONS
X"xX" ECR CFM	EGGCRATE SUPPLY REGISTER (T–BAR CLG, GYP CLG, DUCT MTD) ALUMINUM EGGCRATE WITH FRAME AND OBD, 1" x 1" x 1" CORE TITUS 50F – SHOEMAKER 600 O, SEE SUBMITTAL FOR OPTIONS
#SLOT–INLET ø CFM	SLOT DIFFUSER (LAY–IN T–BAR CEILING) TITUS TBD 80 – SHOEMAKER LSD TYPE 1 FRAME SEE SUBMITTAL FOR SLOT DIMENSION AND OPTIONS
#SLOT–INLET ø/FD CFM	SLOT DIFFUSER WITH FIRE DAMPER (RATED LAY–IN T–BAR CEILING) TITUS TBD FR, SEE SUBMITTAL FOR SLOT DIMENSION AND OPTIONS
#SLOT–INLET ø/P CFM	SLOT DIFFUSER (GYPSUM BOARD CEILING) SAME AS LAY–IN SLOT DIFFUSER ABOVE WITH GYPSUM BOARD CEILING FRAME OPTION, SEE SUBMITTAL FOR SLOT DIMENSION AND OPTIONS
#SLOT–IN ø/FD/P CFM	SLOT DIFFUSER WITH RADIATION DAMPER (GYPSUM BOARD CEILING) SAME AS ABOVE FOR GYPSUM BOARD CEILING WITH RADIATION DAMPER SEE SUBMITTAL FOR SLOT DIMENSION AND OPTIONS
X"xX" SSR CFM	SIDEWALL SUPPLY REGISTER DOUBLE DEFLECTION, HORIZONTAL LONG FRONT BLADES, WITH O.B.D. TITUS MODEL 272RL OBD OPTION – SHOEMAKER 933 OBD OPTION
X"xX" SSG CFM	SIDEWALL SUPPLY GRILLE DOUBLE DEFLECTION, HORIZONTAL LONG FRONT BLADES TITUS MODEL 272RL – SHOEMAKER 933
X"xX" RSG CFM	RADIUS SPIRAL GRILLE (SUPPLY) DOUBLE DEFLECTION, VERTICAL FRONT BLADES, FULL LENGTH EXTRACTOR SHOEMAKER MODEL RS–34–FS (LIMITED TO 20" NOMINAL LENGTH)
X"xX" LNWSG CFM	ALUMINUM LINEAR WALL SUPPLY GRILLE FIXED ANGLED DEFLECTION BLADES, 1/2" SPACING, 1/8" BAR THICKNESS TITUS CT 581 – SHOEMAKER LSW
X"ø SVD CFM	SIDEWALL VENTILATION DIFFUSER UNIFORM 360° DISCHARGE PATTERN, ADJUSTABLE VENTILATION LIFE BREATH 99–EAG
X"xX" RAG	RETURN AIR GRILLE WITH FRAME (LAY–IN T–BAR CEILING) ALUMINUM EGGCRATE WITH ½" x ½" x ½" CORE TITUS 50F – SHOEMAKER 600T
X"xX" RAG/P	RETURN AIR GRILLE (GYPSUM BOARD CEILING) SINGLE DEFLECTION, FIXED ANGLED BLADES, LONG FRONT BLADES TITUS 350RL – SHOEMAKER 935
X"xX" SRG	SIDEWALL RETURN GRILLE SINGLE DEFLECTION, FIXED ANGLED BLADES, LONG FRONT BLADES TITUS 350RL – SHOEMAKER 935
X"xX" LNWRG	ALUMINUM LINEAR WALL RETURN GRILLE FIXED ANGLED DEFLECTION BLADES, 1/2" SPACING, 1/8" BAR THICKNESS TITUS CT 581 – SHOEMAKER LSW
X"xX" SER CFM	SIDEWALL EXHAUST REGISTER SINGLE DEFLECTION, FIXED ANGLED BLADES, LONG FRONT BLADES, O.B.D. TITUS 350RL OBD OPTION – SHOEMAKER 935 OBD OPTION
X"xX" SEG CFM	SIDEWALL EXHAUST GRILLE SINGLE DEFLECTION, FIXED ANGLED BLADES, LONG FRONT BLADES TITUS 350RL – SHOEMAKER 935
X"xX" EG CFM	EXHAUST GRILLE WITH FRAME (LAY–IN T–BAR CEILING) ALUMINUM EGGCRATE WITH ½" x ½" x ½" CORE TITUS 50F – SHOEMAKER 600T
X"xX" EG/P CFM	RETURN AIR GRILLE (PLASTER CEILING) SINGLE DEFLECTION, FIXED ANGLED BLADES, LONG FRONT BLADES TITUS 350RL – SHOEMAKER 935
X"xX" ER CFM	EXHAUST REGISTER SINGLE DEFLECTION, FIXED ANGLED BLADES, LONG FRONT BLADES, O.B.D. TITUS 350RL OBD OPTION – SHOEMAKER 935 OBD OPTION
X"xX" TG	TRANSFER GRILLE WITH FRAME (LAY–IN T–BAR CEILING) ALUMINUM EGGCRATE WITH ½" x ½" x ½" CORE TITUS 50F – SHOEMAKER 600T
X"xX" TG/P	TRANSFER GRILLE (GYPSUM BOARD CEILING) SINGLE DEFLECTION, FIXED ANGLED BLADES, LONG FRONT BLADES TITUS 350RL OBD OPTION – SHOEMAKER 935
X"xX" STG	SIDEWALL TRANSFER GRILLE SINGLE DEFLECTION, FIXED ANGLED BLADES, LONG FRONT BLADES TITUS 350RL – SHOEMAKER 935

SYMBOLS LEGEND (HVAC)

	DUCT UNDER POSITIVE PRESSURE
	DUCT UNDER NEGATIVE PRESSURE
	TURNING VANES
XXXX	VERTICAL DUCT RISER/ CONTINUATION TAG
XXXX	HORIZONTAL DUCT CONTINUATION TAG
12'-6" BOD	ELEVATION FROM F.F.L. (INSULATION AND DUCT FLANGES EXTEND 1½" BELOW BOD CALLOUT)
XXXX OR XXXX / XXXX	EQUIPMENT IDENTIFICATION
T	THERMOSTAT
S	SENSOR
CO	CARBON MONOXIDE
CO2	CARBON DIOXIDE
NO2	NITROGEN DIOXIDE
	CEILING OR INLINE EXHAUST FAN
	24" x 12" RETURN AIR GRILLE W/SOUNDLINED CAN
	SUPPLY AIR ARROW
	RETURN AIR ARROW
FC	FLEXIBLE CONNECTION
	DUCT HEATER
	MANUAL VOLUME DAMPER
	MOTORIZED DAMPER
	SMOKE DETECTOR
	VERTICAL FIRE DAMPER (1½ HOUR)
	HORIZONTAL FIRE DAMPER (1½ HOUR)
3 HR	VERTICAL FIRE DAMPER (3 HOUR)
3 HR	HORIZONTAL FIRE DAMPER (3 HOUR)
BDD–L/M/H	BACK DRAFT DAMPER LOW/MEDIUM/HIGH VELOCITY
CBDD–L/M/H	COUNTER–BALANCED BACK DRAFT DAMPER LOW/MEDIUM/HIGH VELOCITY
	SMOKE DAMPER
	HORIZONTAL COMBINATION SMOKE AND FIRE DAMPER
	VERTICAL COMBINATION SMOKE AND FIRE DAMPER
	SPIN–IN TAKE–OFF & VOLUME DAMPER
12x12/SL	14" x 14" O.D. SHEETMETAL WITH 1" SOUNDLINER (U.N.O.), 12" x 12" NET I.D.
12x12	UNLINED 12" x 12" S.M. DUCT
12x12	12" x 12" I.D. DUCTBOARD
12x12/R–X	UNLINED 12" x 12" S.M. DUCT WITH EXTERNAL INSULATION (X DENOTES MINIMUM R–VALUE FOR INSULATION)
12x12/[FW–X,FWG–X]	UNLINED 12" x 12" S.M. DUCT WITH FIRE–RATED WRAP OR FIRE–RATED WRAP FOR GREASE EXHAUST DUCT (X INDICATES THE HOUR RATING OF THE FIRE WRAP)
R D	RISE OR DROP IN DIRECTION OF FLOW
	FLEXIBLE DUCT
38x24ø	FLAT OVAL DUCT
	SPIN–IN TAKE–OFF & VOLUME DAMPER
	AIRFLOW DIRECTION THROUGH THE PARKING GARAGE TO THE GARAGE EXHAUST FANS.
	EXHAUST LOUVER
	INTAKE LOUVER

SHEET INDEX

REV #	SHEET #	SHEET TITLE
3	M0.01	LEGENDS AND NOTES
3	M0.02	LEGENDS AND NOTES
3	M0.03	LEGENDS AND NOTES
3	M0.04	LOAD CALCULATIONS
3	M0.05	LOAD CALCULATIONS
3	M0.06	LOAD CALCULATIONS
3	M0.07	LOAD CALCULATIONS
3	M0.08	LOAD CALCULATIONS
3	M0.09	LOAD CALCULATIONS
3	M2.00	LEVEL B01 HVAC PLAN
3	M2.01	LEVEL 1 HVAC PLAN
3	M2.02	LEVEL 2 HVAC PLAN
3	M2.03	LEVEL 3 HVAC PLAN
3	M2.RF	ROOF HVAC PLAN
3	MP2.00	LEVEL B01 HVAC PIPING PLAN
3	MP2.01	LEVEL 1 HVAC PIPING PLAN
3	MP2.02	LEVEL 2 HVAC PIPING PLAN
3	MP2.03	LEVEL 3 HVAC PIPING PLAN
3	MP2.RF	ROOF HVAC PIPING PLAN
–	* M3.01	ENLARGED PLANS
3	M4.01	SECTIONS
3	M5.01	VRF RISER DIAGRAMS
3	M5.02	VRF RISER DIAGRAMS
3	M5.03	VRF RISER DIAGRAMS
3	M6.01	DETAILS
3	M6.02	STRUCTURAL CALCULATIONS
3	M6.03	STRUCTURAL CALCULATIONS
3	M6.04	STRUCTURAL CALCULATIONS
3	M6.05	STRUCTURAL CALCULATIONS
3	M6.06	STRUCTURAL CALCULATIONS
3	M7.01	SCHEDULES
3	M7.02	SCHEDULES
3	M7.03	SCHEDULES

* INDICATES SHEETS NOT INCLUDED IN THIS ISSUE

VICINITY MAP



PROPERTY INFORMATION

PARCEL NUMBER: 151560–0010

LEGAL DESCRIPTION:

CHANNEL CREST ADD & AN UND 7/8 INT IN TR A SUBJ TO ESMT & SH LDS ADJ LOTS 1 & 2

APPLICABLE CODES

1. 2021 INTERNATIONAL BUILDING CODE (2021 IBC) WITH WA STATE AMENDMENTS
2. 2021 INTERNATIONAL MECHANICAL CODE (2021 IMC) WITH WA STATE AMENDMENTS
3. 2021 WASHINGTON STATE ENERGY CODE (2021 WSEC)
4. 2021 INTERNATIONAL FIRE CODE (2021 IFC) WITH WA STATE AMENDMENTS
5. 2021 INTERNATIONAL FUEL GAS CODE (2021 IFGC) WITH WA STATE AMENDMENTS
6. 2021 UNIFORM PLUMBING CODE (2021 UPC) WITH WA STATE AMENDMENTS
7. 2023 NATIONAL ELECTRICAL CODE (NFPA 70 – 2023)

SCOPE OF WORK

1. INSTALL THREE (3) VRF HEAT RECOVERY CONDENSERS, FOUR (4) VRF BRANCH CONTROLLERS, FIFTY–FOUR (54) VRF FAN COILS, ASSOCIATED DUCTWORKS, GRDS AND CONTROL THERMOSTATS.
2. INSTALL ONE (1) VRF HEAT PUMP CONDENSER, ONE (1) VRF HEAT PUMP FAN COIL, ASSOCIATED DUCTWORKS, GRDS AND CONTROL THERMOSTAT.
3. INSTALL TWO (2) ROOFTOP PACKAGED HEAT PUMP WITH ECONOMIZER, ASSOCIATED DUCTWORKS, GRDS AND CONTROL THERMOSTAT.
4. INSTALL ELEVEN (11) INDOOR HEAT RECOVERY VENTILATOR, ASSOCIATED DUCTWORKS, GRDS AND CONTROL.
5. INSTALL ONE (1) ROOFTOP HEAT RECOVERY VENTILATOR, ASSOCIATED DUCTWORKS, GRDS AND CONTROL.
6. INSTALL THREE (3) EXHAUST FANS FOR ELECTRICAL ROOM, KILN ROOM, AND FUME HOOD.
7. INSTALL ONE (1) FAN HEATER FOR SCIENCE LAB MAKEUP AIR.
8. INSTALL THREE (3) DUCTLESS SPLIT SYSTEM FOR ELEVATOR MACHINE, MDF & IDF ROOM.

HOLADAY–PARKS, INC.
SMART Mechanical Solutions©
Mechanical Solutions • Energy Services
Building Controls • Service & Maintenance
4600 S. 134TH PLACE
TUKWILA, WA 98168 • (206) 248–9700
HOLADAYPARKS.COM
WA LICENSE NUMBER: HOLADPI379N0

MAXWELL GREENSTREET — STATE OF WASHINGTON — 52096 — REGISTERED PROFESSIONAL ENGINEER

12/15/2025

APPROVED FOR CONSTRUCTION

3700 E MERCER WAY
BARNABIE POINT

NO.	DATE	DESCRIPTION
3	12/15/25	100% CONSTRUCTION DOCS
2	08/25/25	90% CONSTRUCTION DOCS
1	06/04/25	BUILDING PERMIT

4 JUNE 2025
BUILDING PERMIT

PROJECT: 64605

LEGENDS AND NOTES

M0.01

ORIGINAL SHEET SIZE: 24" X 36"

ALL RIGHTS RESERVED: THESE DRAWINGS BELONG IN ANY FORM TO HOLADAY–PARKS, INC. NO PART OF THIS DOCUMENT MAY BE REPRODUCED IN ANY FORM OR BY ANY MEANS WITHOUT PERMISSION IN WRITING FROM HOLADAY PARKS, INC.

NON-RESIDENTIAL VENTILATION CALCULATIONS (CONSTANT VOLUME SINGLE ZONE)

SYSTEM AND ZONE INFORMATION					2021 IMC / SMC CRITERIA (NOTE 1)										
SYSTEM TAG	FLOOR	ROOM DESCRIPTION	GROSS SQUARE FOOTAGE (SQFT)	OCCUPANCY CLASSIFICATION	CODE CRITERIA PEOPLE OUTDOOR AIRFLOW, Rp (CFM/PERSON)	CODE CRITERIA AREA OUTDOOR AIRFLOW, Ra (CFM/SF)	ACTUAL AREA OUTDOOR AIRFLOW USED (CFM/SF)	CODE CRITERIA OCCUPANT DENSITY (#1000 SF)	CODE CRITERIA NUMBER OF OCCUPANTS	ACTUAL NUMBER OF OCCUPANTS USED	ZONE AIR DISTRIBUTION EFFECTIVENESS (EZ) TABLE 403.3.1.1.1.2	2021 IMC CRITERIA DEFAULT CALCULATED OUTSIDE AIR (CFM)	CALCULATED OUTSIDE AIR (CFM)	ACTUAL DESIGN (CFM)	REMARK
SINGLE ZONE EQUIPMENT WITH DUCTED VENTILATION															
ERV-B-1	B	CONFERENCE 006	450	CONFERENCE	5	0.06	0.06	20	9	14	0.8	90	121	125	
	B	WORKROOM 005	290	OFFICE	5	0.06	0.06	5	2	2	0.8	34	34	35	
	B	FACULTY 004	635	OFFICE	5	0.06	0.06	5	4	4	0.8	73	73	75	
	B	ART 003	826	CLASSROOM	10	0.12	0.12	35	29	25	1	389	580	580	4
	B	CIRCULATION 001	900	CORRIDOR	5	0.06	0.06	0	0	5	0.8	68	99	100	
ERV-B-2	B	STEM / SCIENCE 002	1200	CLASSROOM	10	0.18	0.18	25	30	25	0.8	645	1300	1300	5
ERV-1-1	1	LRC-1 119	290	CLASSROOM	10	0.12	0.12	35	11	7	1	145	105	105	
	1	PRESCHOOL 118	855	CLASSROOM	10	0.12	0.12	25	22	19	1	323	293	295	
	1	PRESCHOOL 117	848	CLASSROOM	10	0.12	0.12	25	22	19	1	322	292	295	
ERV-1-2	1	CLASSRM 116	752	CLASSROOM	10	0.12	0.12	35	27	25	1	360	340	340	
	1	CLASSRM 115	752	CLASSROOM	10	0.12	0.12	35	27	25	1	360	340	340	
	1	OFFICE 107	146	OFFICE	5	0.06	0.06	5	1	1	0.8	17	17	20	
	1	OFFICE 112	153	OFFICE	5	0.06	0.06	5	1	1	0.8	18	18	20	
ERV-1-3	1	OFFICE 112A	85	OFFICE	5	0.06	0.06	5	1	1	0.8	13	13	15	
	1	OFFICE 114D	90	OFFICE	5	0.06	0.06	5	1	1	0.8	13	13	15	
	1	OFFICE 114C	90	OFFICE	5	0.06	0.06	5	1	1	0.8	13	13	15	
	1	OFFICE 114B	95	OFFICE	5	0.06	0.06	5	1	1	0.8	13	13	15	
	1	CLASSRM 113	735	CLASSROOM	10	0.12	0.12	35	26	25	1	348	338	340	
	1	KITCHEN 102	229	KITCHEN	7.5	0.12	0.12	20	5	2	0.8	81	53	55	
	1	ADMIN 114	335	OFFICE	5	0.06	0.06	5	2	4	0.8	38	50	50	
	1	MP LOBBY 101	705	CORRIDOR	5	0.06	0.06	0	0	2	0.8	53	65	65	
	1	CIRCULATION 111	1191	CORRIDOR	5	0.06	0.06	0	0	2	0.8	89	102	105	
ERV-2-1	2	CLASSRM 207	750	CLASSROOM	10	0.12	0.12	35	27	27	1	360	360	360	
ERV-2-2	2	CLASSRM 206	750	CLASSROOM	10	0.12	0.12	35	27	27	1	360	360	360	
ERV-2-3	2	BREAKOUT 200A	405	OFFICE	5	0.06	0.06	5	3	10	1	39	74	95	
	2	LRC-2 205	181	CLASSROOM	5	0.06	0.06	5	1	2	0.8	20	26	30	
	2	CLASSRM 204	744	CLASSROOM	10	0.12	0.12	35	27	25	1	359	339	340	
ERV-2-4	2	CLASSRM 203	743	CLASSROOM	10	0.12	0.12	35	27	25	1	359	339	340	
	2	CLASSRM 202	734	CLASSROOM	10	0.12	0.12	35	26	25	1	348	338	340	
ERV-2-5	2	RENTAL 212	361	OFFICE	5	0.06	0.06	5	2	2	1	32	32	40	
	2	CONF RM 212A	241	CONFERENCE	5	0.06	0.06	20	5.0	5	1	39	39	50	
	2	OFFICE 212B	120	OFFICE	5	0.06	0.06	5	1	1	0.8	15	15	15	
	2	CONF RM 213A	468	CONFERENCE	5	0.06	0.06	20	10.0	10	0.8	98	98	100	
	2	WORKRM 213B	88	OFFICE	5	0.06	0.06	5	1	1	0.8	13	13	15	
	2	OFFICE 213C	102	OFFICE	5	0.06	0.06	5	1	1	0.8	14	14	15	
	2	RENTAL 213	630	OFFICE	5	0.06	0.06	5	4	5	1	58	63	80	
	2	CIRCULATION 200	1270	CORRIDOR	5	0.06	0.06	0	0	4	0.8	95	120	165	
	2	BREAK RM 211A	328	OFFICE	5	0.06	0.12	35	12	8	1	80	79	80	
RTU-R-1	1	GYM / MULTI 103B EAST	2152	AUDITORIUM	5	0.06	0.06	100	216	140	1	1209	829	840	
RTU-R-2	1	GYM / MULTI 103B WEST	1550	GYM	20	0.18	0.18	7	11	15	1	499	579	600	
ERV-C-1	1	CHAPEL 103A	1450	AUDITORIUM	5	0.06	0.06	150	218	125	0.8	1471	890	900	
ERV-R-1	3	OFF/PHONE 303C	77	OFFICE	5	0.06	0.06	5	1.0	1	0.8	12	12	15	
	3	COO 303B	102	OFFICE	5	0.06	0.06	5	1.0	2	0.8	14	20	20	
	3	DEV/COMM 303D	245	OFFICE	5	0.06	0.06	5	2.0	4	0.8	31	43	45	
	3	PROGRAM OFFICE 303E	316	OFFICE	5	0.06	0.06	5	2.0	5	1	29	44	55	
	3	EXEC OFFICE 303F	176	OFFICE	5	0.06	0.06	5	1.0	2	0.8	19	26	30	
	3	CAMP SCHECHTER 303	350	OFFICE	5	0.06	0.06	5	2.0	2	0.8	39	39	40	
	3	RENTAL OFFICE	122	OFFICE	5	0.06	0.06	5	1.0	2	0.8	15	22	25	
	3	CONF RM 303A	387	CONFERENCE	5	0.06	0.06	20	8.0	10	0.8	79	92	95	
	3	CIRC 300	1253	CORRIDOR	5	0.06	0.06	0	0.0	8	0.8	94	144	145	
	3	RENTAL 302	479	OFFICE	5	0.06	0.06	5	3.0	5	0.8	55	67	70	
	3	OFFICE 302D	112	OFFICE	5	0.06	0.06	5	1.0	2	0.8	15	21	25	
	3	OFFICE 302A	78	OFFICE	5	0.06	0.06	5	1.0	1	0.8	12	12	15	
	3	OFFICE 302B	79	OFFICE	5	0.06	0.06	5	1.0	1	0.8	12	12	15	
	3	OFFICE 302C	78	OFFICE	5	0.06	0.06	5	1.0	1	0.8	12	12	15	
	3	OFFICE 301A	210	OFFICE	5	0.06	0.06	5	2.0	4	0.8	28	41	45	
	3	OFFICE 301B	102	OFFICE	5	0.06	0.06	5	1.0	1	0.8	14	14	15	
	3	OFFICE 301C	102	OFFICE	5	0.06	0.06	5	1.0	1	0.8	14	14	15	
	3	SNOEZELEN RM 301E	204	OFFICE	5	0.06	0.06	5	2.0	3	1	22	27	30	
	3	OPEN OFFICE	580	OFFICE	5	0.06	0.06	5	3.0	4	1	50	55	55	
	3	GAME / TECH 301G	330	CLASSROOM	10	0.12	0.12	35	12.0	16	1	160	200	200	
	3	MUSIC 301F	430	CLASSROOM	10	0.12	0.12	35	16.0	10	0.8	265	190	220	
	3	ART / STEM 301D	458	LECTURE CLASSROOM	7.5	0.06	0.06	35	17.0	52	0.8	194	522	525	

1 VENTILATION CALCULATIONS PERFORMED PER 2018 SMC AND IMC, EQUATION 4-1 AND 4-2.
2 PER SECTION 403.3.1.1 EXCEPTION, IF THE OCCUPANCY DENSITY IS KNOWN AND DOCUMENTED IN THE PLANS, THE OUTSIDE AIR RATE MAY BE BASED ON THE DESIGN OCCUPANT DENSITY.
3 THE OCCUPANT QUANTITY USED SHALL NOT BE LESS THAN ONE-HALF THAT RESULTING FROM APPLICATION OF TABLE 403.3.1.1 ESTIMATED MAXIMUM OCCUPANCY RATE.
4 PER 2021 IMC TABLE 403.3.1, ART CLASSROOM REQUIRED 0.7 CFM / SQ.FT. EXHAUST AIRFLOW. ERV PROVIDE MAKEUP AIR FOR THE EXHAUST AIR.
5 PER 2021 IMC TABLE 403.3.1, SCIENCE LABORATORY REQUIRED 1.0 CFM / SQ.FT. EXHAUST AIRFLOW. ERV PROVIDE MAKEUP AIR FOR THE EXHAUST AIR.

MAXIMUM ALLOWABLE REFRIGERANT VOLUME

	SPACE AND VOLUME DATA				REFRIGERANT DATA (2)			CALCULATIONS		
EQUIPMENT TAG	SPACE SERVED	TOTAL FLOOR AREA (SQFT)	TOTAL VOLUME OF SPACES (CUFT)	VOLUME OF SMALLEST SPACES SERVED (CUFT)	NAME	CLASSIFICATION	MAXIMUM CODE ALLOWED LBS PER 1000 CUFT	TOTAL INSTALLED REFRIGERANT QUANTITY (LBS)	MAXIMUM CODE ALLOWED QUANTITY (LBS)	DOES QUANTITY COMPLY WITH MAXIMUM (Y/N)
VRF-R-3	LEVEL 3 VARIES	7146	67887	67887	R410A	A1	26	84.7	1765	YES
VRF-R-2	LEVEL 2 VARIES	7915	75192.5	75192.5	R410A	A1	26	80.1	1955	YES
VRF-R-1	LEVEL 1 & B VARIES	11652	110694	110694	R410A	A1	26	110.2	2878	YES
VRF-R-4	CHAPEL	1663	29934	29934	R410A	A1	26	46.0	778	YES
CU-B-1	MDF ROOM	171	1881	1881	R454B	A2L	22	7.7	41	YES
CU-R-1	SHARED IDF RM	157	1727	1727	R454B	A2L	22	7.7	38	YES
CU-R-2	3RD FLR IDF RM	32	352	352	R454B	A2L	22	7.7	8	YES
CU-R-3	ELEVATOR MACHINE	66	726	726	R454B	A2L	22	7.7	16	YES

ELECTRICAL COORDINATION NOTES

1. NE VOLTAGE (120 VOLT AND ABOVE) WIRING FOR MECHANICAL EQUIPMENT SHALL BE PROVIDED AND INSTALLED BY THE ELECTRICAL CONTRACTOR. LOW VOLTAGE (LESS THAN 120 VOLT) WIRING FOR MECHANICAL EQUIPMENT AND DDC SYSTEMS SHALL BE PROVIDED BY THE CONTROLS CONTRACTOR.
2. ALL ELECTRICAL INSTALLATIONS FOR MECHANICAL EQUIPMENT SHALL BE INSTALLED IN ACCORDANCE WITH THE 2023 NATIONAL ELECTRICAL CODE (NEC) AND ALL STATE AND LOCAL CODES AND AMENDMENTS.
3. MECHANICAL EQUIPMENT MAY REQUIRE A SHORT-CIRCUIT CURRENT RATING (SCCR) GREATER THAN WHAT IS AVAILABLE FROM THE MECHANICAL EQUIPMENT MANUFACTURER. THE ELECTRICAL CONTRACTOR SHALL BE RESPONSIBLE FOR FURNISHING AND INSTALLING ANY COMPONENTS, DEVICES, OR WIRING NECESSARY TO COMPLY WITH THE ELECTRICAL CODE AND TO MEET THE EQUIPMENT SCCR REQUIREMENTS.
4. WHERE INDICATED ON EQUIPMENT SCHEDULES, THE EQUIPMENT COMES COMPLETE FROM THE FACTORY WITH MOTOR STARTERS OR VARIABLE FREQUENCY DRIVES. THE ELECTRICAL CONTRACTOR SHALL PROVIDE ELECTRICAL SERVICE AND DISCONNECTS AS REQUIRED BY STATE AND LOCAL CODES, AND INSTALL ALL POWER WIRING, INCLUDING CONNECTING TO EQUIPMENT.
5. WHERE INDICATED ON EQUIPMENT SCHEDULES, THE EQUIPMENT REQUIRES FIELD INSTALLED MOTOR STARTERS, DISCONNECTS, AND/OR VARIABLE SPEED DRIVES. THE ELECTRICAL CONTRACTOR SHALL PROVIDE AND INSTALL MOTOR STARTERS (OR CONTACTORS WHERE INDICATED), PROVIDE SERVICE AND DISCONNECTS PER CODE, INSTALL VARIABLE SPEED DRIVES AND MOTOR OVERLOAD PROTECTION AS REQUIRED, AND INSTALL ALL POWER WIRING, INCLUDING CONNECTING TO EQUIPMENT. FOR AUTOMATIC MOTOR STARTERS, HOLDING COIL CIRCUIT SHALL BE POWERED BY ELECTRICAL CONTRACTOR AND SHALL BE 120 VOLT/1 PHASE UNLESS INDICATED OTHERWISE. ALL STARTERS SHALL BE PROVIDED WITH AN H-O-A SWITCH.
6. WHERE INDICATED ON FAN SCHEDULES, FANS MAY BE FURNISHED WITH A SPEED CONTROLLER AND/OR LINE VOLTAGE THERMOSTAT. THE ELECTRICAL CONTRACTOR SHALL PROVIDE ROUGH-IN AND INSTALL OF THE SPEED CONTROLLER ON FAN HOUSINGS AND THERMOSTATS AS INDICATED ON THE MECHANICAL PLANS. THE ELECTRICAL CONTRACTOR SHALL PROVIDE WIRING AND DISCONNECTS AS REQUIRED BY THE NEC AND OTHER STATE AND LOCAL CODES AND CONNECTIONS TO THE FAN EQUIPMENT.
7. WHERE INDICATED ON MECHANICAL PLANS AND EQUIPMENT SCHEDULES, THE ELECTRICAL CONTRACTOR SHALL PROVIDE AND INSTALL ELECTRIC UNIT HEATERS, BASEBOARD ELECTRIC HEAT, AND OR UNIT HEATERS. THERMOSTATS AND ALL POWER WIRING SHALL BE BY THE ELECTRICAL CONTRACTOR.
8. A FIRE AND/OR SMOKE DETECTION AND ALARM SYSTEM, AS MAY BE REQUIRED BY THE OWNER, ARCHITECT, OR CODE AUTHORITY, IS THE RESPONSIBILITY OF THE ELECTRICAL CONTRACTOR OR THE FIRE/LIFE/SAFETY CONTRACTOR. ALL ASPECTS OF THIS SYSTEM HAVE BEEN EXCLUDED BY THE MECHANICAL CONTRACTOR, EXCEPT THAT THE MECHANICAL CONTRACTOR MAY PROVIDE THE FANS, DAMPERS, AND OTHER MECHANICAL EQUIPMENT. IT IS THE RESPONSIBILITY OF THE ELECTRICAL CONTRACTOR OR FIRE/LIFE/SAFETY CONTRACTOR TO INTERLOCK THE MECHANICAL CONTRACTOR SUPPLIED EQUIPMENT WITH THE FIRE AND/OR SMOKE DETECTION AND ALARM SYSTEM.
9. WHERE INDICATED ON MECHANICAL PLANS AND EQUIPMENT SCHEDULES, DUCT SMOKE DETECTORS ARE TO BE INSTALLED PER THE 2021 INTERNATIONAL MECHANICAL CODE (IMC). WHERE INDICATED ON THE MECHANICAL PLANS, DUCT SMOKE DETECTORS SHALL BE FURNISHED BY THE ELECTRICAL CONTRACTOR OR FIRE/LIFE/SAFETY CONTRACTOR, INSTALLED IN THE DUCT BY THE MECHANICAL CONTRACTOR, AND WIRED TO THE FIRE/LIFE/SAFETY SYSTEM AND TO THE MECHANICAL EQUIPMENT FOR EQUIPMENT SHUTDOWN BY THE ELECTRICAL CONTRACTOR OR THE FIRE/LIFE/SAFETY CONTRACTOR. WHERE INDICATED ON THE MECHANICAL EQUIPMENT SCHEDULES THAT THE EQUIPMENT IS PROVIDED WITH FACTORY INSTALLED DUCT SMOKE DETECTORS, THE DUCT SMOKE DETECTOR SHALL BE WIRED TO THE FIRE/LIFE/SAFETY SYSTEM AND TO THE MECHANICAL EQUIPMENT FOR EQUIPMENT SHUTDOWN.
10. WHERE INDICATED ON THE MECHANICAL PLANS, COMBINATION FIRE SMOKE DAMPERS ARE FURNISHED AND INSTALLED BY THE MECHANICAL CONTRACTOR. DUCT OR AREA SMOKE DETECTORS FOR THE COMBINATION FIRE SMOKE DAMPERS SHALL BE FURNISHED BY THE ELECTRICAL CONTRACTOR OR FIRE/LIFE/SAFETY CONTRACTOR. DUCT MOUNTED SMOKE DETECTORS SHALL BE INSTALLED IN THE DUCT BY THE MECHANICAL CONTRACTOR. AREA SMOKE DETECTORS SHALL BE INSTALLED BY THE ELECTRICAL CONTRACTOR OR THE FIRE/LIFE/SAFETY CONTRACTOR. WIRING OF THE DUCT OR AREA SMOKE DETECTOR TO THE COMBINATION FIRE SMOKE DAMPER ACTUATOR AND TO THE BUILDING FIRE ALARM SYSTEM SHALL BE PROVIDED BY THE ELECTRICAL CONTRACTOR OR FIRE/LIFE/SAFETY CONTRACTOR.
11. A MINIMUM OF TWO, 120V, 50 AMP CONTROL CIRCUITS ARE REQUIRED PER FLOOR FOR THE BUILDING DDC SYSTEM. THE ELECTRICAL CONTRACTOR SHALL PROVIDE ELECTRICAL SERVICE AND A DISCONNECT PER STATE AND LOCAL CODES, AND INSTALL ALL POWER WIRING, INCLUDING CONNECTING TO THE CONTROLS CONTRACTOR PROVIDED TRANSFORMERS AND EQUIPMENT.

DUCT SEALING AND LEAKAGE TESTING NOTES

1. ALL DUCTS AND PLENUMS SHALL BE CONSTRUCTED IN ACCORDANCE WITH SECTION C403.10.2 OF THE 2021 WASHINGTON STATE ENERGY CODE (WSEC) AND THE 2021 INTERNATIONAL MECHANICAL CODE. FOR LOW PRESSURE (2" W.C. OR LESS) DUCTS, MEDIUM PRESSURE (GREATER THAN 2" BUT LESS THAN 3" W.C.), AND HIGH PRESSURE (3" W.C. OR GREATER), ALL DUCTS SHALL BE SEALED PER SECTIONS C403.10.2 OF THE 2021 WSEC. WHERE REQUIRED BY THE 2021 WSEC, DUCTS SHALL BE LEAK TESTED (SEE NOTE 5 BELOW).
2. THE PRESSURE CLASSIFICATION OF ALL DUCTS SHALL BE INDICATED, EITHER ON THE SHEET METAL CONSTRUCTION NOTES, OR LISTED ON THE HVAC FLOOR PLANS. SEE THE SHEET METAL NOTES ON THESE PLANS FOR DESIGN DUCT CONSTRUCTION STANDARDS AND DESIGN PRESSURE CLASSIFICATION.
3. DUCT JOINTS, SEAMS, AND CONNECTIONS SHALL BE CONSTRUCTED AND SEALED IN ACCORDANCE WITH SECTION C403.10.2 OF THE 2021 WSEC AND SECTION 603.9 OF THE 2021 INTERNATIONAL MECHANICAL CODE (IMC) AND CONSTRUCTED AS SPECIFIED IN SMACNA HVAC DUCT AND CONSTRUCTION STANDARDS – METAL AND FLEXIBLE. JOINTS, LONGITUDINAL AND TRANSVERSE SEAMS AND CONNECTIONS SHALL BE SECURELY FASTENED AND SEALED WITH WELDS, GASKETS, MASTICS, MASTIC-PLUS-EMBEDDED-FABRIC SYSTEMS, LIQUID SEALANTS, OR TAPES. TAPES AND MASTICS USED TO SEAL METALLIC AND FLEXIBLE AIR DUCTS AND FLEXIBLE AIR CONNECTORS SHALL COMPLY WITH UL 181B. DUCT CONNECTIONS TO FLANGES OF AIR DISTRIBUTION EQUIPMENT SHALL BE SEALED AND MECHANICALLY FASTENED. MECHANICAL FASTENERS FOR USE WITH FLEXIBLE NON-METALLIC AIR DUCTS SHALL COMPLY WITH UL 181B. CLOSURE SYSTEMS USED TO SEAL ALL DUCTWORK SHALL BE INSTALLED PER THE MANUFACTURER'S INSTRUCTIONS.
4. FOR LOW PRESSURE SUPPLY AND RETURN AIR DUCTS (2" W.C. OR LESS) ADDITIONAL CLOSURE SYSTEMS ARE NOT REQUIRED FOR CONTINUOUSLY WELDED JOINTS AND SEAMS AND LOCKING-TYPE JOINTS AND SEAMS.
5. HIGH PRESSURE DUCTS (GREATER THAN 3" W.C.) SHALL BE LEAK TESTED IN ACCORDANCE WITH THE SMACNA HVAC AIR DUCT LEAKAGE TEST MANUAL AND PROVEN TO HAVE A LEAKAGE RATE (CL) OF 4.0 OR LESS BASED ON THE EQUATION LISTED IN SECTION C403.10.2.3 OF THE 2021 WSEC. DOCUMENTATION OF THE LEAKAGE TESTING AND FINAL LEAKAGE RATE SHALL BE PROVIDED TO THE ENGINEER OF RECORD. AT LEAST 25 PRECENT OF ALL DUCT SURFACE AREA SHALL BE TESTED AND SHALL CONFORM TO THESE REQUIREMENTS. THE TEST PRESSURE USED FOR THE LEAKAGE TEST SHALL BE EITHER THE DESIGN DUCT CONSTRUCTION PRESSURE CLASS OR THE AVERAGE OPERATING PRESSURE. SEE THE SHEET METAL NOTES ON THESE PLANS FOR DESIGN DUCT CONSTRUCTION STANDARDS AND DESIGN PRESSURE CLASSIFICATION.

PROJECT COMMISSIONING NOTES

COMMISSIONING OF MECHANICAL (HVAC) SYSTEMS, LIGHTING SYSTEMS, SERVICE WATER HEATING SYSTEMS, AND METERING SYSTEMS MAY BE PROVIDED BY A THIRD PARTY COMMISSIONING AGENT (NOT HOLADAY-PARKS). THE NOTES BELOW ARE PROVIDED FOR REFERENCE TO MECHANICAL SYSTEM COMMISSIONING REQUIREMENTS IN THE 2021 WASHINGTON STATE ENERGY CODE (WSEC) ONLY. THESE NOTES DO NOT CONSTITUTE THE PERFORMANCE OF THE REQUIRED COMMISSIONING BY HOLADAY-PARKS. REFER TO SECTION 408 OF THE 2021 WSEC FOR COMPLETE REQUIREMENTS.

1. PROJECTS WHERE THE BUILDING MECHANICAL SYSTEM HAVE A HEATING CAPACITY GREATER THAN 300 MBH OR A HAVE COOLING CAPACITY GREATER THAN 20 TONS (240 MBH) SHALL BE COMMISSIONED IN ACCORDANCE WITH SECTION 408.2 OF THE 2021 WSEC. ALL OTHER PROJECTS INSTALLING MECHANICALS SYSTEM THAT DO NOT MEET OR EXCEED THE HEATING OR COOLING LIMITS ABOVE ARE NOT REQUIRED TO PERFORM MECHANICAL SYSTEM COMMISSIONING.
2. WHERE REQUIRED BY THE 2021 WSEC (SEE 1 ABOVE), MECHANICAL SYSTEM COMMISSIONING SHALL INCLUDE THE FOLLOWING AS REQUIRED BY SECTION C408.1 OF THE 2021 WSEC:
   A. COMMISSIONING PLAN.
   B. SYSTEM ADJUSTING AND BALANCING INCLUDING AIR SYSTEMS AND HYDRONIC SYSTEM BALANCING.
   C. HVAC EQUIPMENT AND HVAC CONTROLS AND ECONOMIZER FUNCTIONAL TESTING.
   D. OPERATING AND MAINTENANCE DOCUMENTS (MANUALS) AND RECORD DOCUMENTS (DRAWINGS).
   E. COMMISSIONING REPORT.
3. A COMMISSIONING PLAN SHALL BE DEVELOPED BY THE PROJECTS CERTIFIED COMMISSIONING PROFESSIONAL (CPE) IN ACCORDANCE WITH SECTION C408.1.2. THE COMMISSIONING PLAN SHALL INCLUDE ORGANIZATION, SCHEDULES, RESOURCES, AND DOCUMENTATION FOR THE COMMISSIONING PROCESS. THE CPE SHALL MEET THE REQUIREMENTS SPECIFIED IN SECTION C202 OF THE 2021 WSEC. THE CPE SHALL PROVIDE ITEMS 1 THROUGH 3, AS DESCRIBED IN SECTION C408.1.2, FOR THE COMMISSIONING PLAN. NOTE THAT HOLADAY-PARKS OR ITS EMPLOYEES ARE NOT DESIGNATED AS THE CERTIFIED COMMISSIONING PROFESSIONAL ON THE PROJECT.
4. A COMMISSIONING COMPLIANCE CHECKLIST SHALL BE SUBMITTED TO THE BUILDING OFFICIAL UPON SUBSTANTIAL COMPLETION OF THE BUILDING OR PROJECT. THE COMPLIANCE CHECKLIST SHALL BE PROVIDED TO THE BUILDING OWNER OR OWNER'S REPRESENTATIVE WITHIN 14 DAYS OF THE DATE OF SUBSTANTIAL COMPLETION BY THE COMMISSIONING AGENT. THE BUILDING OWNER OR OWNER'S AGENT IS RESPONSIBLE FOR PROVIDING A COMPLETED AND SIGNED COPY OF THE COMPLIANCE CHECKLIST TO THE BUILDING OFFICIAL. THE COMPLETED COMMISSIONING COMPLIANCE CHECKLIST PROVIDED TO THE BUILDING OFFICIAL IS DEEMED TO SATISFY THE REQUIREMENTS OF SECTION C408.1.4.1 OF THE 2021 WSEC.
5. A COMMISSIONING REPORT IS TO BE PROVIDED TO THE BUILDING OWNER, IN ACCORDANCE WITH SECTION C408.1.3. THE COMMISSIONING REPORT SHALL MEET THE REQUIREMENTS OF SECTION C408.1.3 AND SHALL INCLUDE RESULTS OF FUNCTIONAL TESTING, A LIST OF DEFICIENCIES INCLUDING CORRECTIVE ACTIONS, FUNCTIONAL PERFORMANCE TEST PROCEDURES INCLUDING MEASURED DATA, AND BALANCING REPORT. ANY TESTING THAT COULD NOT BE PERFORMED DUE TO CLIMATE CONDITIONS ARE NOT REQUIRED TO BE INCLUDED IN THE FINAL COMMISSIONING REPORT.

DUCT INSULATION REQUIREMENTS

1. ALL DUCTS AND PLENUMS SHALL BE INSULATED IN ACCORDANCE WITH THE 2021 INTERNATIONAL MECHANICAL CODE (IMC), THE 2021 WASHINGTON STATE ENERGY CODE (WSEC), AS REQUIRED BY ANY LOCAL CODES, AND AS SPECIFIED IN THESE NOTES AND/OR ON THE HVAC PLANS.
2. ALL SHAFTS AND PLENUMS THAT CONVEY OUTSIDE AIR SHALL BE INSULATED AND SEALED TO THE SAME REQUIREMENT AS THE BUILDING ENVELOPE (WALLS). BASED ON THE 2021 WSEC WALL U-VALUE OF 0.052 FOR METAL FRAMED WALLS, THE INSULATION SHALL BE A MINIMUM OF R-19.2. THE BUILDING ENVELOPE LEVEL INSULATION SHALL BE CONTINUOUS FROM THE EXTERIOR OPENING TO A BUILDING ENVELOPE ISOLATION MOTORIZED CONTROL DAMPER (MCD) OR TO THE CONNECTION TO THE MECHANICAL EQUIPMENT INLET, INCLUDING THE RETURN AIR/OUTSIDE AIR MIXING PLENUM THAT MAY BE CONNECTED TO THE INLET OF THE HVAC EQUIPMENT.
3. ALL DUCTS THAT CONVEY OUTSIDE AIR SHALL BE INSULATED IN ACCORDANCE WITH SECTION C403.10.1.1 OF THE 2021 WSEC.
   a. OUTSIDE AIR DUCTS INSIDE CONDITIONED SPACES UPSTREAM OF A BUILDING ENVELOPE ISOLATION MOTORIZED CONTROL DAMPER AND THAT DELIVERS GREATER THAN 2800 CFM OF OUTSIDE AIR SHALL BE INSULATED TO A MINIMUM OF R-16.
   b. OUTSIDE AIR DUCTS INSIDE CONDITIONED SPACES DOWNSTREAM OF A BUILDING ENVELOPE ISOLATION MOTORIZED CONTROL DAMPER AND THAT DELIVERS GREATER THAN 2800 CFM OF OUTSIDE AIR SHALL BE INSULATED TO A MINIMUM OF R-8.
   c. OUTSIDE AIR DUCTS THAT SERVE INDIVIDUAL MECHANICAL UNITS AND THAT DELIVER LESS THAN 2800 CFM OF SUPPLY AIR TO EACH UNIT SHALL BE INSULATED TO A MINIMUM OF R-7 AND DO NOT NEED TO COMPLY WITH THE REQUIREMENTS OF NOTE 2.a ABOVE. THE BUILDING ENVELOPE ISOLATION DAMPER SHALL BE LOCATED AT THE MECHANICAL EQUIPMENT UNIT INTAKE UNLESS SHOWN OTHERWISE ON THESE PLANS.
4. ALL SUPPLY, RETURN, AND EXHAUST AIR DUCTS AND PLENUMS SHALL BE INSULATED IN ACCORDANCE WITH SECTION C403.10.1.2 OF THE WSEC.
   a. SUPPLY AND RETURN AIR DUCTS OUTSIDE THE BUILDING (ON THE ROOF, ABOVE INSULATED CEILINGS, WITHIN UNCONDITIONED PARKING GARAGES, AND WITHIN CRAWL SPACES) SHALL BE INSULATED TO A MINIMUM OF R-8.
   b. SUPPLY AND RETURN AIR DUCTS LOCATED IN UNCONDITIONED SPACES INSIDE THE BUILDING SHALL BE INSULATED TO A MINIMUM OF R-6. UNCONDITIONED SPACES INSIDE THE BUILDING ARE THOSE SPACES THAT HAVE NEITHER HEATING OR COOLING AND ARE NOT INSULATED TO BUILDING ENVELOPE REQUIREMENTS. WHERE REQUIRED, THE INSULATION REQUIREMENT SHALL BE NOTED ON THESE HVAC PLANS ALONG WITH THE DUCT SIZE (E.G. 12x12/R-6).
   c. SUPPLY AND RETURN AIR DUCTS LOCATED IN UNCONDITIONED SPACES WHERE THE DUCT CONVEYS AIR WITHIN 15'F OF THE AIR TEMPERATURE OF THE UNCONDITIONED SPACE SHALL BE INSULATED TO A MINIMUM OF R-3.3. WHERE REQUIRED, THE INSULATION REQUIREMENT SHALL BE NOTED AS "W" FOR WRAPPED INSULATION ON THESE HVAC PLANS ALONG WITH THE DUCT SIZE (E.G. 12x12/W).
   d. ALL SUPPLY AND RETURN AIR DUCTS AND PLENUMS THAT ARE LOCATED INSIDE THE CONDITIONED SPACES AND THE AIR STREAM TEMPERATURE CAN OPERATE BELOW 55'F OR ABOVE 105'F SHALL BE INSULATED TO A MINIMUM OF R-3.3 UNLESS THE DUCTS AND PLENUMS ARE EXPOSED TO THE SPACE THAT IS BEING SERVED (E.G. OPEN TO STRUCTURE). WHERE REQUIRED, THE INSULATION REQUIREMENT SHALL BE NOTED AS "W" FOR WRAPPED INSULATION ON THESE HVAC PLANS ALONG WITH THE DUCT SIZE (E.G. 12x12/W).
   e. EXHAUST DUCTS FROM AN ENERGY RECOVERY VENTILATO

SEQUENCE OF OPERATIONS

AIR COOLED HEAT RECOVERY VRF SYSTEMS

AIR-COOLED HEAT RECOVERY VRF OUTDOOR CONDENSERS, VRF-R-1, VRF-R-2 & VRF-R-3, PROVIDE HEATING & COOLING FOR LEVEL B THRU LEVEL 3. THE OUTDOOR CONDENSERS WILL BE CONTROLLED BY THE VRF SYSTEM CONTROLLERS. SEE VRF FAN COIL SEQUENCE OF OPERATION FOR ADDITIONAL REQUIREMENTS

HEAT RECOVERY VRF FAN COILS

ALL HEAT PUMP FAN COILS MUST BE MANUFACTURED BY THE SAME MANUFACTURER AS THE VRF SYSTEM AND SHALL BE PROVIDED WITH THE VRF MANUFACTURER'S CONTROLS SYSTEM.

THERMOSTATS SHALL BE PROVIDED BY THE VRF EQUIPMENT MANUFACTURER. THERMOSTAT SETPOINTS, INCLUDING OFF-HOUR CONTROLS AND SETBACK SHALL BE CONTROLLED VIA THE VRF EQUIPMENT MANUFACTURER'S BACNET INTERFACE THROUGH THE BUILDING DDC SYSTEM.

1. OCCUPIED OPERATION:
   WHEN THE FAN COILS ARE CONTROLLED TO THE OCCUPIED MODE, THE FAN COIL UNIT WILL CONTROL TO PROVIDE HEATING OR COOLING ACCORDING TO PRE-PROGRAMMED SETPOINT TEMPERATURE. FAN SHALL BE PROGRAMMED TO OFF DURING SYSTEM DEAD BAND.
2. UNOCCUPIED OPERATION:
   WHEN THE FAN COILS ARE CONTROLLED TO THE UNOCCUPIED MODE, THE FAN COIL SUPPLY FAN WILL RUN ONLY DURING HEATING OR COOLING TO MEET UNOCCUPIED TEMPERATURE SETPOINTS.

HEAT RECOVERY VENTILATION SYSTEMS

OPERATING MODES OF HEAT RECOVERY VENTILATION SYSTEMS ARE AS FOLLOWS:
SINGLE ZONE HEAT RECOVERY VENTILATOR: ERV-2-1 & ERV-2-2, & ERV-C-1
CONSTANT VOLUME HEAT RECOVERY VENTILATOR: ERV-B-1, ERV-B-2, ERV-1-3, ERV-2-4 & ERV-2-5
VARIABLE VOLUME HEAT RECOVERY VENTILATOR: ERV-1-1, ERV-1-2, ERV-2-3 & ERV-R-1

1. UNOCCUPIED MODE:
   BMS SHALL COMMAND THE MOTROIZED DAMPERS ON EACH SYSTEM INTO THE UNOCCUPIED MODE BASED UPON A SCHEDULE DETERMINED BY THE OWNER/TENANT. THE SUPPLY AND RETURN AIR DAMPERS SHALL BE CLOSED.
2. OCCUPIED OPERATION:
   WHEN BUILDING BMS CONTROLLED THE ERV UNIT TO THE OCCUPIED MODE AND ALL ERV UNIT FUNCTIONS ARE ENABLED.
   SUPPLY & RETURN AIR DAMPERS SHALL BE COMMANDED TO OPEN.

   SINGLE ZONE HEAT RECOVERY VENTILATOR:
   BMS SHALL MODULATE THE ERV FAN SPEED BASED ON CO2 SENSOR PROVIDED IN SPACE. BMS SHALL PROVIDE MINIMUM FAN SPEED TO PROVIDE 20% OF THE DESIGN OSA CFM AND MODULATE UP WHEN SPACE CO2 LEVEL GOES UP.

   CONSTANT VOLUME HEAT RECOVERY VENTILATOR:
   BMS SHALL ACTIVATE THE CONSTANT VOLUME VENTILATOR TO PROVIDE CONSTANT OSA TO SPACE FOR ONE OF THE TWO CONDITIONS. NO DEMAND CONTROL VENTILATION REQUIRED FOR THE SYSTEM OR FULL CONSTANT EXHAUST AIR VOLUME EQUAL TO SUPPLY AIR VOLUME.

   VARIABLE VOLUME HEAT RECOVERY VENTILATOR
   FOR ROOM WHICH DCV IS REQUIRED, A MOTORIZED DAMPER SHALL BE PROVIDED TO MODULATE OPEN / CLOSE BASED ON CO2 SENSOR IN SPACE.
   BMS SHALL MODULATE THE ERV SUPPLY FAN SPEED TO MAINTAIN MINIMUM DUCT STATIC PRESSURE OF +0.3% W.G. (ADJ).

   BMS SHALL MODULATE THE ERV RETURN FAN SPEED TO MAINTAIN DUCT STATIC PRESSURE OF -0.3% W.G. (ADJ).

   AUTOMATIC AIRFLOW REGULATOR SHALL BE PROVIDED FOR ANY EXHAUST GRILLE TO PROVIDE CONSTANT EXHAUST AIR VOLUME FOR THE ROOM, SUCH AS RESTROOM, JANITOR CLOSET, ETC.

   HEATING / COOLING:
   HEATING / COOLING IS PROVIDED AT THE ZONE LEVEL VIA LOCAL FAN COILS.

ELECTRIC ROOM EXHAUST FAN (EF-B-1)

EXHAUST FAN, EF-B-1, SHALL BE CONTROLLED BY A LOCAL THERMOSTAT TO MAINTAIN SPACE TEMPERATURE NOT TO EXCEED 85 DEG F.

KILN ROOM EXHAUST FAN (EF-B-2)

EXHAUST FAN, EF-B-1, SHALL BE CONTROLLED BY A LOCAL THERMOSTAT TO MAINTAIN SPACE TEMPERATURE NOT TO EXCEED 100 DEG F.

FUME HOOD EXHAUST FAN (EF-R-1)

ROOFTOP EXHAUST FAN, EF-R-1, SHALL BE CONTROLLED BY BMS DURING OCCUPY HOURS TO PROVIDE THE MINIMUM AIRFLOW OF 100 CFM. FAN SPEED SHALL MODULATE UP TO 550 CFM WHEN HOOD IS IN OPERATION.

SPLIT HEAT PUMP SYSTEM (CU-R-1/DXFC-2-1 & CU-B-2/DXFC-B-2)

SPLIT HEAT PUMP SYSTEM PROVIDED 24/7 COOLING & HEATING FOR THE ELEVATOR CONTROL ROOM ON LEVEL B & SHARED IDF ROOM ON LEVEL 2. FAN COILS SHALL BE PROGRAMMED TO PROVIDE A COOLING SETPOINT TO MAINTAIN THE ROOM TEMPERATURE OF 75°F (ADJ).

SPLIT AC SYSTEM (CU-B-1/DXFC-B-1)

SPLIT HEAT PUMP SYSTEM PROVIDED 24/7 COOLING FOR THE MDF ROOM ON LEVEL B. FAN COILS SHALL BE PROGRAMMED TO PROVIDE A COOLING SETPOINT TO MAINTAIN THE ROOM TEMPERATURE OF 75°F (ADJ).

ROOFTOP PACKAGED HEAT PUMP (RTU-R-1 & RTU-R-2)

ROOFTOP PACKAGED HEAT PUMP SYSTEMS SERVING GYM / MULTI-FUNCTION SHALL BE CONTROLLED BY BMS BASED ON THE TIME OF DAY SCHEDULE PROVIDED BY OWNER.

WHEN THE HEAT PUMP IS CONTROLLED TO THE UNOCCUPIED MODE, OSA DAMPER SHALL BE CLOSED UNLESS OUTSIDE AIR TEMPERATURES ARE SUCH THAT ECONOMIZER COOLING IS AVAILABLE. THE SUPPLY FAN WILL RUN ONLY DURING HEATING OR COOLING TO MEET UNOCCUPIED TEMPERATURE SETPOINTS.

WHEN THE HEAT PUMP IS CONTROLLED TO THE OCCUPIED MODE, ALL UNIT FUNCTION SHALL BE ENABLED. EACH PACKAGED HEAT PUMP SYSTEM PROVIDED WITH AIR-SIDE ECONOMIZER CONTROLLED BY ON-BOARD CONTROLLER.

DURING OCCUPIED OPERATION, OSA DAMPER SHALL BE COMMANDED TO OPEN TO THE PRESET OSA AIRFLOW VOLUME PER SCHEDULE. OSA DAMPER SHALL ALSO CONTROLLED BY A SPACE CO2 SENSOR TO MODULATE CLOSE. MINIMUM OSA AIRFLOW SHALL BE 10% OF FAN AIRFLOW CFM.

SEISMIC RESTRAINT NOTES

1. ALL HVAC EQUIPMENT AND DUCT WORK SHALL BE INSTALLED IN ACCORDANCE WITH THE 2021 INTERNATIONAL BUILDING CODE (IBC), THE 2021 INTERNATIONAL MECHANICAL CODE (IMC), AND OTHER APPLICABLE STATE AND LOCAL CODES. EQUIPMENT AND DUCT WORK SHALL BE SEISMICALLY RESTRAINED IN ACCORDANCE WITH THESE CODES AND THE LATEST EDITION OF THE SMACNA SEISMIC RESTRAINT MANUAL GUIDELINES FOR MECHANICAL SYSTEMS.
2. FOR SOME EQUIPMENT, HOLADAY-PARKS, INC. WILL UTILIZE SEISMIC RESTRAINTS AND MATERIALS SPECIFIED BY A WASHINGTON STATE LICENSED STRUCTURAL ENGINEER. THE SEISMIC DESIGN AND CALCULATION PACKAGE PREPARED BY THE STRUCTURAL ENGINEER SHALL BE PROVIDED TO THE BUILDING OFFICIAL FOR REVIEW.
3. BASE-MOUNTED EQUIPMENT INSTALLED USING SPRING-ISOLATORS SHALL HAVE TOTALLY ENCLOSED, SEISMIC RATED, SPRING ISOLATORS (MASON MODEL SSLFH OR APPROVED EQUAL) OR OPEN SPRING ISOLATORS PLUS SEISMIC RATED "SNUBBERS" (MASON MODEL Z-1225 OR EQUAL). SPRING ISOLATORS AND SNUBBERS, WHERE REQUIRED, SHALL BE INSTALLED PER STRUCTURAL SEISMIC DESIGN CALCULATIONS AND IN ACCORDANCE WITH THE MANUFACTURER'S RECOMMENDATIONS.
4. EQUIPMENT SUSPENDED FROM THE STRUCTURE ABOVE SHALL BE INSTALLED USING SEISMIC RATED SPRING HANGERS OR AN ENGINEERED SUPPORT SYSTEM. SEISMIC RATED SPRING HANGERS SHALL BE DOUBLE DEFLECTION TYPE PRE-COMPRESSED HANGERS (MASON MODEL PC30NS OR APPROVED EQUAL). SPRING HANGERS SHALL BE INSTALLED PER THE STRUCTURAL SEISMIC DESIGN CALCULATIONS AND IN ACCORDANCE WITH THE MANUFACTURER'S RECOMMENDATIONS. SEE NOTE 5 BELOW FOR ADDITIONAL REQUIREMENTS FOR SUSPENDED EQUIPMENT. EQUIPMENT INSTALLED USING AN ENGINEERED SUPPORT SYSTEM SHALL BE INSTALLED IN ACCORDANCE WITH THE STRUCTURAL SEISMIC DESIGN CALCULATIONS FOR THE ENGINEERED SUPPORT SYSTEM.
5. SUSPENDED EQUIPMENT INSTALLED USING SPRING ISOLATORS SHALL HAVE SEISMIC CABLING INSTALLED IN ADDITION TO THE EQUIPMENT HANGERS. CABLING SHALL BE INSTALLED DIAGONALLY UP AND AWAY FROM EQUIPMENT CORNERS AND BE ATTACHED TO THE STRUCTURE ABOVE. CABLES SHALL BE LEFT PARTIALLY SLACK. SIZE AND INSTALL CABLES PER THE SMACNA SEISMIC RESTRAINT MANUAL AND IN ACCORDANCE WITH THE MANUFACTURER'S INSTALLATION REQUIREMENTS.
6. EQUIPMENT MOUNTED RIGIDLY TO THE BUILDING STRUCTURE SHALL NOT REQUIRE ADDITIONAL SEISMIC RESTRAINT. INSTALLATION OF EQUIPMENT TO THE BUILDING STRUCTURE SHALL BE PER THE STRUCTURAL SEISMIC DESIGN CALCULATIONS AND PER THE MANUFACTURER'S INSTALLATION REQUIREMENTS.
7. ALL RECTANGULAR DUCTS HAVING A CROSS SECTIONAL AREA GREATER THAN 6 SQFT AND ALL ROUND DUCTS GREATER THAN 32" IN DIAMETER SHALL BE BRACED IN ACCORDANCE WITH THE SMACNA SEISMIC RESTRAINT MANUAL. BRACING SIZE AND SPACING SHALL BE PER THE SMACNA SEISMIC RESTRAINT MANUAL. CONNECTION OF BRACING TO STRUCTURAL MEMBERS SHALL BE IN ACCORDANCE WITH THE SMACNA SEISMIC RESTRAINT MANUAL.
8. ALL CEILING MOUNTED DIFFUSERS SHALL HAVE SAFETY WIRES (16 GA.) ATTACHED TO THE FLOOR SLAB OR STRUCTURE ABOVE. SAFETY WIRES SHALL BE LEFT PARTIALLY SLACK. ALTERNATE METHOD SHALL BE TO ATTACH DIFFUSERS TO T-BAR GRID WITH SCREWS, RIVETS, OR CEILING CLIPS FOR TERMINALS WEIGHING LESS THAN 20 POUNDS.
9. ALL HYDRONIC PIPING GREATER THAN 3" DIAMETER SHALL BE BRACED IN ACCORDANCE WITH THE SMACNA SEISMIC RESTRAINT MANUAL. ALL GAS, FUEL, AND COMPRESSED AIR PIPING SHALL BE BRACED PER THE STATE AND LOCAL CODES. ALL PLUMBING PIPING SHALL BE BRACED IN ACCORDANCE WITH STATE AND LOCAL CODES.
10. WHERE THE BUILDING IMPORTANCE FACTOR (Ip) IS GREATER THAN 1.0, NOTES 7, 8, AND 9 ABOVE WILL NOT APPLY. REFER TO THE SMACNA SEISMIC RESTRAINT MANUAL FOR ADDITIONAL BRACING AND SEISMIC RESTRAINT REQUIREMENTS AND CONTACT HP ENGINEERING FOR ADDITIONAL INFORMATION.

COMMISSIONING NOTES

COMMISSIONING OF MECHANICAL (HVAC) SYSTEMS, LIGHTING SYSTEMS, SERVICE WATER HEATING SYSTEMS, AND METERING SYSTEMS MAY BE PROVIDED BY A THIRD PARTY COMMISSIONING AGENT (NOT HOLADAY-PARKS). THE NOTES BELOW ARE PROVIDED FOR REFERENCE TO MECHANICAL SYSTEM COMMISSIONING REQUIREMENTS IN THE 2021 WASHINGTON STATE ENERGY CODE (WSEC) ONLY. THESE NOTES DO NOT CONSTITUTE THE PERFORMANCE OF THE REQUIRED COMMISSIONING BY HOLADAY-PARKS. REFER TO SECTION 408 OF THE 2021 WSEC FOR COMPLETE REQUIREMENTS.

1. PROJECTS WHERE THE BUILDING MECHANICAL SYSTEM HAVE A HEATING CAPACITY GREATER THAN 300 MBH OR A HAVE COOLING CAPACITY GREATER THAN 20 TONS (240 MBH) SHALL BE COMMISSIONED IN ACCORDANCE WITH SECTION 408.2 OF THE 2021 WSEC. ALL OTHER PROJECTS INSTALLING MECHANICALS SYSTEM THAT DO NOT MEET OR EXCEED THE HEATING OR COOLING LIMITS ABOVE ARE NOT REQUIRED TO PERFORM MECHANICAL SYSTEM COMMISSIONING.
2. WHERE REQUIRED BY THE 2021 WSEC (SEE 1 ABOVE), MECHANICAL SYSTEM COMMISSIONING SHALL INCLUDE THE FOLLOWING AS REQUIRED BY SECTION C408.1 OF THE 2021 WSEC:
   A. COMMISSIONING PLAN.
   B. SYSTEM ADJUSTING AND BALANCING INCLUDING AIR SYSTEMS AND HYDRONIC SYSTEM BALANCING.
   C. HVAC EQUIPMENT AND HVAC CONTROLS AND ECONOMIZER FUNCTIONAL TESTING.
   D. OPERATING AND MAINTENANCE DOCUMENTS (MANUALS) AND RECORD DOCUMENTS (DRAWINGS).
   E. COMMISSIONING REPORT.
3. A COMMISSIONING PLAN SHALL BE DEVELOPED BY THE PROJECTS CERTIFIED COMMISSIONING PROFESSIONAL (CPE) IN ACCORDANCE WITH SECTION C408.1.2. THE COMMISSIONING PLAN SHALL INCLUDE ORGANIZATION, SCHEDULES, RESOURCES, AND DOCUMENTATION FOR THE COMMISSIONING PROCESS. THE CPE SHALL MEET THE REQUIREMENTS SPECIFIED IN SECTION C202 OF THE 2021 WSEC. THE CPE SHALL PROVIDE ITEMS 1 THROUGH 3, AS DESCRIBED IN SECTION C408.1.2, FOR THE COMMISSIONING PLAN. NOTE THAT HOLADAY-PARKS OR ITS EMPLOYEES ARE NOT DESIGNATED AS THE CERTIFIED COMMISSIONING PROFESSIONAL ON THE PROJECT.
4. A COMMISSIONING COMPLIANCE CHECKLIST SHALL BE SUBMITTED TO THE BUILDING OFFICIAL UPON SUBSTANTIAL COMPLETION OF THE BUILDING OR PROJECT. THE COMPLIANCE CHECKLIST SHALL BE PROVIDED TO THE BUILDING OWNER OR OWNER'S REPRESENTATIVE WITHIN 14 DAYS OF THE DATE OF SUBSTANTIAL COMPLETION BY THE COMMISSIONING AGENT. THE BUILDING OWNER OR OWNER'S AGENT IS RESPONSIBLE FOR PROVIDING A COMPLETED AND SIGNED COPY OF THE COMPLIANCE CHECKLIST TO THE BUILDING OFFICIAL. THE COMPLETED COMMISSIONING COMPLIANCE CHECKLIST PROVIDED TO THE BUILDING OFFICIAL IS DEEMED TO SATISFY THE REQUIREMENTS OF SECTION C408.1.4.1 OF THE 2021 WSEC.
5. A COMMISSIONING REPORT IS TO BE PROVIDED TO THE BUILDING OWNER, IN ACCORDANCE WITH SECTION C408.1.3. THE COMMISSIONING REPORT SHALL MEET THE REQUIREMENTS OF SECTION C408.1.3 AND SHALL INCLUDE RESULTS OF FUNCTIONAL TESTING, A LIST OF DEFICIENCIES INCLUDING CORRECTIVE ACTIONS, FUNCTIONAL PERFORMANCE TEST PROCEDURES INCLUDING MEASURED DATA, AND BALANCING REPORT. ANY TESTING THAT COULD NOT BE PERFORMED DUE TO CLIMATE CONDITIONS ARE NOT REQUIRED TO BE INCLUDED IN THE FINAL COMMISSIONING REPORT.

SHEET METAL NOTES

1. ALL DUCT SHALL BE INSTALLED IN ACCORDANCE WITH THE 2021 INTERNATIONAL MECHANICAL CODE (IMC), OTHER STATE AND LOCAL CODES AND STANDARDS. ALL DUCTS SHALL BE CONSTRUCTED IN ACCORDANCE WITH THE SMACNA DUCT CONSTRUCTION STANDARDS AND WITH HOLADAY PARKS SHOP FABRICATION STANDARDS.
2. ALL DUCTS SHALL BE SEISMICALLY BRACED IN ACCORDANCE WITH SMACNA SEISMIC RESTRAINT MANUAL (SEE SEISMIC RESTRAINT NOTES ON THIS SHEET).
3. DUCT SIZES INDICATED ON PLANS ARE NET INSIDE DIMENSIONS. A CALL-OUT SUCH AS 12 X 12/SL MEANS A 14 X 14 SHEET METAL DUCT WITH 1" DUCT LINER, GIVING A NET INSIDE DIMENSION OF 12" X 12".
4. DUCT PENETRATIONS THROUGH FIRE AND OR SMOKE RATED WALLS, CEILINGS, AND FLOORS SHALL BE PROTECTED IN ACCORDANCE WITH THE 2021 IMC. SEE PLANS FOR THESE LOCATIONS. PROTECTION, WHERE REQUIRED, SHALL BE INSTALLED IN ACCORDANCE WITH THE MANUFACTURER'S INSTALLATION REQUIREMENTS AND STATE AND LOCAL CODES.
5. DUCT SHALL BE CONSTRUCTED TO DIMENSIONS INDICATED ON PLANS. THE TOLERANCE OF THESE DIMENSIONS SHALL BE AS SPECIFIED IN HOLADAY-PARKS, INC. SHOP STANDARDS MANUAL. LENGTHS, AND CRITICAL DIMENSIONS BETWEEN DUCT AND OTHER BUILDING OR SYSTEM ELEMENTS ARE INDICATED WHERE A LOCATION OR DIMENSION SCALED FROM THE DRAWING WILL NOT BE ADEQUATE. THE TOLERANCE OF CRITICAL DIMENSIONS, IF NOT INDICATED, SHALL DEFAULT TO THAT OF THE INSTALLING MECHANIC'S MEASURING DEVICES. SCALED LOCATIONS OR DIMENSIONS ARE NOT SUBJECT TO TOLERANCE GUIDELINES.
6. THESE PLANS HAVE BEEN COORDINATED WITH THE ARCHITECTURAL, STRUCTURAL, SPRINKLER, AND ELECTRICAL DRAWINGS. ANY CHANGES IN THIS LAY-OUT MUST BE REVIEWED BY HOLADAY-PARKS' ENGINEERING DEPARTMENT.
7. DUCT ELBOWS SHALL BE RADIUS TYPE WITH FULL WIDTH THROAT RADIUS, UNLESS SHOWN OTHERWISE. TURNING VANE ELBOWS SHALL HAVE DOUBLE THICKNESS TURNING VANES INSTALLED IN EVERY RAIL TAB.
8. DUCT SHALL BE SEALED PER 2021 WASHINGTON STATE ENERGY CODE (WSEC) REQUIREMENTS (SEE DUCT SEALING AND LEAKAGE TEST NOTES ON THIS SHEET). DUCT SYSTEMS SHALL BE LEAK TESTED IN ACCORDANCE WITH THE 2021 WSEC REQUIREMENTS (SEE DUCT SEALING AND LEAKAGE TEST NOTES ON THIS SHEET).
9. DUCT SHALL BE INSULATED PER 2021 WSEC REQUIREMENTS. INSULATION IN ADDITION TO THAT REQUIRED BY THE ENERGY CODE SHALL BE AS INDICATED ON THE PLANS AND IN NOTES BELOW.
10. INDOOR FAN COIL OR HEAT PUMP SYSTEM DUCT CONSTRUCTION SHALL BE AS FOLLOWS:
    a. SUPPLY DUCT FROM FAN COILS AND HEAT PUMPS TO SUPPLY DIFFUSER RUNOUTS SHALL BE AS SHOWN ON THE PLANS. WHERE INDICATED ON PLANS WITH "W" (WRAP), SHEET METAL SUPPLY DUCT SHALL BE WRAPPED WITH 1-1/2" DUCT INSULATION (SEE NOTE 21.e BELOW). WHERE INDICATED WITH "SL", DUCTS SHALL HAVE 1" DUCT LINER (SEE NOTE 21.a BELOW). FABRICATE AND INSTALL SUPPLY DUCT TO 1/2" PRESSURE CLASSIFICATION PER SMACNA DUCT CONSTRUCTION STANDARDS.
    b. RUNOUTS FROM SUPPLY DUCT TO DIFFUSERS SHALL BE LOW PRESSURE (1/2" PRESSURE CLASS) DUCT AND LOW PRESSURE (1/2" PRESSURE CLASS) INSULATED FLEX DUCT. FLEX DUCT SHALL BE LIMITED TO 12 FEET AND TWO 45 DEGREE TURNS.
    c. WHERE RETURN AIR IS DUCTED, RETURN AIR DUCT SHALL BE SAME AS SUPPLY. RETURN AIR PLENUMS AT FAN COILS AND HEAT PUMPS SHALL BE GALVANIZED SHEET METAL WITH 1" DUCT LINER (SEE NOTE 21.a BELOW). FIBERGLASS RETURN AIR PLENUMS ARE NOT ACCEPTABLE. FABRICATE AND INSTALL RETURN AIR DUCTS AND PLENUMS TO 1/2" PRESSURE CLASSIFICATION PER SMACNA DUCT CONSTRUCTION STANDARDS.
    d. OUTSIDE AIR DUCT, WHERE INDICATED ON DRAWINGS, SHALL BE AS FOLLOWS:
       1. DUCT FROM BUILDING EXTERIOR TO OUTSIDE AIR DAMPER SHALL BE SHEET METAL WITH DUCT INSULATION. R-VALUE OF INSULATION SHALL BE EQUIVALENT THE BUILDING ENVELOPE (MINIMUM R-19).
       2. DUCT FROM OUTSIDE AIR DAMPER UP TO FAN COIL OR HEAT PUMP SHALL BE RECTANGULAR GALVANIZED SHEET METAL WITH 2" DUCT LINER (SEE NOTE 21.b BELOW) OR DUCT INSULATION WITH R-VALUE NOTED ON PLANS. DUCT FROM OUTSIDE AIR DAMPER UP TO INLINE DUCT HEATER OR FAN/DUCT HEATER COMBINATION, SHALL BE THE SAME AS NOTED ABOVE.
       3. DUCT AFTER INLINE DUCT HEATER OR FAN/DUCT HEATER COMBINATION SHALL BE RECTANGULAR GALVANIZED SHEET METAL OR GALVANIZED SPIRAL DUCT. DUCT INDICATED WITH "W" (WRAP) ON THE PLANS SHALL BE INSULATED TO THE R-VALUE NOTED. MAKE CONNECTION TO FAN COIL OR HEAT PUMP RETURN PLENUM WITH SHORT PIECE OF INSULATED FLEXIBLE DUCT (SEE NOTE 21.c BELOW) OR FLEXIBLE CONNECTOR.
       4. DUCT SHALL BE FABRICATED AND INSTALLED TO SMACNA 1/2" PRESSURE CLASSIFICATION.
11. ROOFTOP PACKAGED AC OR HEAT PUMP SYSTEMS DUCT CONSTRUCTION SHALL BE AS FOLLOWS:
    a. VERTICAL DROPS FROM ROOFTOP A/C UNITS SHALL BE RECTANGULAR GALVANIZED SHEET METAL WITH 1" DUCT LINER. FABRICATE AND INSTALL PER SMACNA 1/2" PRESSURE CLASSIFICATION.
    b. SUPPLY DUCT FROM VERTICAL DROPS TO SUPPLY DIFFUSER RUNOUTS SHALL BE AS SHOWN ON THE PLANS. SHEET METAL SUPPLY DUCT INDICATED WITH "W" (WRAP) ON THE PLANS SHALL BE INSULATED TO THE R-VALUE NOTED. LINED SHEET METAL SHALL HAVE 1" DUCT LINER (SEE NOTE 21.a BELOW). FABRICATE AND INSTALL SUPPLY DUCT TO SMACNA 1/2" PRESSURE CLASSIFICATION.
    c. RUNOUTS FROM SUPPLY DUCT TO DIFFUSERS SHALL BE LOW PRESSURE (1/2" PRESSURE CLASS) DUCT AND LOW PRESSURE (1/2" PRESSURE CLASS) INSULATED FLEX DUCT. FLEX DUCT SHALL BE LIMITED TO 14 FEET AND TWO 45 DEGREE TURNS.
    d. WHERE RETURN AIR IS DUCTED, RETURN AIR DUCT SHALL BE THE SAME AS FOR SUPPLY (SEE NOTE 11.b AND 11.c ABOVE).
12. GENERAL EXHAUST DUCTS SHALL BE UNLINED GALVANIZED SHEET METAL (UNLESS OTHERWISE INDICATED), WITH UN-INSULATED FURNACE PIPE RUNOUTS AND UN-INSULATED VAPOR PROOF FLEX CONNECTIONS (SEE 21.e BELOW) TO REGISTER AND/OR GRILLE CANS. FLEX AIR DUCT CONNECTIONS SHALL BE LIMITED TO A MAXIMUM OF 4 FEET FROM GRILLE OR REGISTER TO EXHAUST DUCT. FABRICATE AND INSTALL PER SMACNA 1" PRESSURE CLASSIFICATION.
13. DRYER EXHAUST DUCTS SHALL NOT BE CONNECTED OR INSTALLED WITH SHEET METAL SCREWS OR FASTENERS THAT PROTRUDE INTO THE EXHAUST AIRSTREAM. DRYER EXHAUST DUCT TERMINATIONS SHALL NOT HAVE SCREENS.
14. FIRE DAMPERS, SMOKE DAMPERS, AND COMBINATION FIRE/SMOKE DAMPERS SHALL BE INSTALLED IN ACCORDANCE WITH THE 2021 IMC. SEE FLOOR PLANS FOR LOCATIONS AND EQUIPMENT SCHEDULES IN THESE PLANS FOR ADDITIONAL INFORMATION.
15. SUPPLY AND RETURN AIR DUCTS INSTALLED ON EXTERIOR OF BUILDING SHALL HAVE MINIMUM R-7 (IF LESS THAN 2800 CFM) OR R-8 (IF GREATER THAN 2800 CFM) DUCT LINER (SEE NOTE 21.a BELOW) OR DUCT INSULATION WITH WATERPROOF JACKET MEETING THE SAME INSULATION REQUIREMENTS. REFER TO NOTE 21 BELOW FOR MATERIALS.
16. FLUE VENT CONSTRUCTION SHALL BE OF CLASS 'B', DOUBLE WALL VENT PIPE, (METALBESTOS RV OR APPROVED EQUAL) UNLESS NOTED OTHERWISE ON THE PLANS. VENT PIPE SHALL BE INSTALLED IN ACCORDANCE WITH THE MANUFACTURER'S INSTALLATION REQUIREMENTS, APPLIANCE MANUFACTURER'S RECOMMENDATIONS, AND THE 2021 INTERNATIONAL FUEL GAS CODE (IFGC).
17. PROCESS EXHAUST DUCTS SHALL BE {RECTANGULAR} {ROUND} {SPIRAL} {GALVANIZED SHEET METAL} {STAINLESS STEEL} DUCT {AS SHOWN ON PLANS} WITH SHOP OR FIELD INSTALLED TAKE-OFFS AND FITTINGS. PROCESS EXHAUST DUCT RISERS SHALL BE UNLINED {RECTANGULAR} {ROUND} {SPIRAL} {GALVANIZED SHEET METAL} {STAINLESS STEEL} DUCT {AS SHOWN ON THE PLANS}. FABRICATE AND INSTALL TO SMACNA ({1"}) PRESSURE CLASSIFICATION UNLESS NOTED OTHERWISE.
18. DUCT OPENINGS AND DUCTED WALL OPENINGS, WHERE NOTED ON THESE DRAWINGS, SHALL BE COVERED USING 1/2 INCH X 1/2 INCH GALVANIZED, WELDED, #19 GAUGE WIRE MESH. THE WIRE MESH SHALL BE FURNISHED WITH A GALVANIZED SHEET METAL 22 GAUGE FRAME ON ALL SIDES OF THE SCREEN AND ATTACHED TO THE DUCT OR WALL OPENING USING SHEET METAL SCREWS.

SHEET METAL NOTES (CONT'D.)

19. MATERIALS:
    a. DUCT LINER INDOORS (SL): 1-1/2 PCF DENSITY FIBERGLASS DUCT LINER WITH BLACK MAT FACING, MEETS UL 723 AND E 84, JOHNS MANVILLE "LINACOUSTIC RC", OWENS CORNING "QUIET R", OR CERTAINTEED "TOUGHGARD R", MINIMUM INSTALLED R-VALUE = 3.3/PER INCH, SEE HVAC PLANS FOR THICKNESS REQUIREMENTS.
    b. DUCT LINER OUTDOORS (2" SL): 2" THICK, 1-1/2 PCF DENSITY FIBERGLASS DUCT LINER WITH BLACK MAT FACING, JOHNS MANVILLE "LINACOUSTIC RC", OWENS CORNING "QUIET R", OR CERTAINTEED "TOUGHGARD R", MINIMUM INSTALLED R-VALUE = 7 OR 8 DEPENDING ON APPLICATION, SEE HVAC PLANS FOR INSULATION VALUE REQUIREMENT.
    c. INSULATED FLEX DUCT (LOW AND HIGH PRESSURE): UL 181 CLASS 1 AIR DUCT: THERMAFLEX MK-E OR APPROVED EQUAL.
    d. UN-INSULATED FLEX DUCT (LOW AND HIGH PRESSURE): UL 181 CLASS 1 AIR DUCT: THERMAFLEX S-TL.
    e. DUCT INSULATION (INDOORS): 1-1/2" THICK, 3/4 LB. DENSITY FIBERGLASS WITH F.S.K. VAPOR BARRIER JACKET. (MINIMUM INSTALLED R-VALUE = 3.3)
    f. DUCT INSULATION (OUTDOORS): 3" FIBERGLASS, MINIMUM 3/4 LB. DENSITY OR 2" FIBERGLASS 1.5 LB. DENSITY, WITH VAPOR BARRIER AND WEATHERPROOF JACKET (MINIMUM INSTALLED R-VALUE = 7 OR 8, SEE HVAC PLANS FOR INSULATION VALUE).
    g. PERFORATED METAL: 20" GAUGE COLD ROLLED STEEL WITH 3/16" DIAMETER HOLES ON 1/4" STAGGERED CENTER GIVING 51% OPEN AREA.

GENERAL NOTES

1. THESE DOCUMENTS ARE BASED ON HOLADAY PARKS ENGINEERING AND SHOP FABRICATION STANDARDS, SMACNA DUCT CONSTRUCTION STANDARDS, AND APPLICABLE LOCAL AND STATE CODES WHICH ARE NOT SHOWN IN DETAIL ON THESE DRAWINGS. VARIATION FROM THESE PLANS REQUIRES NOTIFICATION OF HOLADAY-PARKS ENGINEERING DEPARTMENT
2. ALL TRADES SHALL LEAVE A MINIMUM OF 36" CLEARANCE IN FRONT OF MECHANICAL EQUIPMENT ACCESS PANELS FOR SERVICING. ACCESS PANELS THAT CONTAIN LINE VOLTAGE POWER (120 VOLT AND GREATER) SHALL HAVE A MINIMUM OF 42" CLEARANCE IN FRONT OF THE ACCESS PANEL AND A MINIMUM OF THE ACCESS PANEL WIDTH CLEAR FROM OBSTRUCTIONS AS REQUIRED BY STATE AND LOCAL ELECTRICAL CODES.
3. CUTTING, FRAMING, PATCHING AND PAINTING OF WALL, CEILING AND FLOOR OPENINGS, AS REQUIRED BY THESE MECHANICAL PLANS, SHALL BE BY THE GENERAL CONTRACTOR.
4. ROOF CURBS, FLASHINGS, SLEEPERS, PITCH POCKETS, CUTTING AND PATCHING OF ROOF OPENINGS, ROOFING, AND ROOF INSULATION SHALL BE BY THE GENERAL CONTRACTOR, ((EXCEPT FOR ROOFTOP A/C UNITS NO._____ (SEE NOTE #5 BELOW) OR AS NOTED ON PLANS.))
5. ROOF CURBS, SLEEPERS, CANT STRIPS, ROOFING, AND ROOF INSULATION SHALL BE PROVIDED AND INSTALLED BY THE GENERAL CONTRACTOR. CURBS ARE TO BE CONSTRUCTED ACCORDING TO THE SIZES PROVIDED BY HOLADAY-PARKS' FIELD FOREMEN AND/OR AS SHOWN ON THE MECHANICAL PLANS. THE ROOF CURBS SHALL BE SHIMMED AS REQUIRED TO MAKE ROOF CURBS AND/OR SLEEPERS LEVEL. TOP OF CURBS MUST BE TRUE (FLAT) TO PROVIDE AN ACCEPTABLE SEALING SURFACE. THE MAXIMUM ALLOWABLE DEVIATION FROM LEVEL OR FLAT SHALL BE 1/4" IN 10'. ROOF CURBS AND SLEEPERS MUST BE SECURELY FASTENED TO STRUCTURAL SUPPORT MEMBERS BY THE GENERAL CONTRACTOR.
6. ROOFTOP AIR CONDITIONERS NO. _____ ARE FURNISHED WITH FACTORY CURB REQUIRING INSULATION AND CANT STRIP BY THE GENERAL CONTRACTOR. CURB SHALL BE ASSEMBLED AND SET IN PLACE BY THE MECHANICAL CONTRACTOR. LEVELING, TRUING, AND FASTENING OF CURBS TO ROOF STRUCTURE SHALL BE BY THE GENERAL CONTRACTOR. TOP OF THE CURB MUST BE TRUE (FLAT) TO PROVIDE AN ACCEPTABLE SEALING SURFACE. THE MAXIMUM ALLOWABLE DEVIATION FROM LEVEL OR FLAT SHALL BE 1/4" IN 10'. THE ROOF CURB MUST BE SECURELY FASTENED TO STRUCTURAL SUPPORT MEMBERS.
7. PAINTING OF GRILLES, REGISTERS, AND DIFFUSERS, AS MAY BE REQUIRED BY ARCHITECT OR OWNER, SHALL BE DONE BY THE GENERAL CONTRACTOR.
8. ALL LOUVERS, BOTH DUCTED AND NON-DUCTED, ARE TO BE FURNISHED AND INSTALLED BY THE GENERAL CONTRACTOR. LOUVERS ARE SHOWN AND SCHEDULED ON THESE PLANS BOTH FOR COORDINATION, AND TO INDICATE THE REQUIRED LEVEL OF PERFORMANCE. LOUVERS OF ALTERNATE MAKE AND/OR TYPE MAY BE SUBSTITUTED ONLY IF THEY HAVE BOTH PRESSURE DROP AND WATER CARRY-OVER PERFORMANCE EQUAL TO OR BETTER THAN THE LOUVERS SPECIFIED IN THESE MECHANICAL PLANS.
9. DUCTED LOUVERS SHALL BE FURNISHED AND INSTALLED BY MECH

Air System Sizing Summary for Chapel

Project Name: Barnbie Point
Prepared by: Holaday-Parks
05/28/2025
02:01PM

Air System Information
Air System Name: **Chapel**
Air System Type: **Single Zone CAV**
Number of zones: **1**
Floor Area: **1760.0** sqft
Location: **Seattle IAP, Washington**

Sizing Calculation Information
Calculation Months: **Jan to Dec**
Calculation method: **Radiant Time Series**

Central Cooling Coil Sizing Data
Total coil load: **7.3** Tons
Total coil load: **87.9** MBH
Sensible coil load: **73.3** MBH
Coil airflow: **3432** CFM
Sensible heat ratio: **0.835**
Area per unit load: **240.4** sqft/Ton
Load per unit area: **49.9** BTU/(hr-sqft)
Load occurs at: **Jun 1000**
OA DB / WB: **73.8/63.7** F
Entering DB / WB: **75.2/62.9** F
Leaving DB / WB: **55.1/53.9** F
Coil ADP: **52.8** F
Bypass Factor: **0.100**
Resulting RH: **50** %
Design supply temp: **55.0** F

Central Heating Coil Sizing Data
Max coil load: **32.4** MBH
Coil airflow: **3432** CFM
Load per unit area: **18.4** BTU/(hr-sqft)
Load occurs at: **Des Htg**
Ent DB / Lvg DB: **65.9/74.8** F

Supply Fan Sizing Data
Actual max airflow: **3432** CFM
Standard airflow: **3377** CFM
Actual max airflow per unit area: **1.95** CFM/sqft
Fan motor BHP: **0.75** BHP
Fan motor kW: **0.56** kW
Fan static: **0.75** in wg

Outdoor Ventilation Air Data
Design airflow: **303** CFM
Airflow per unit floor area: **0.17** CFM/sqft
Airflow per person: **3.03** CFM/person

Space Sizing Data

Space Name	Maximum Cooling Sensible MBH	Design Airflow CFM	Time of Peak Load	Maximum Heating Load MBH	Space Floor Area sqft	Space CFM/sqft
Chapel	72.9	3432	Jul 1000	19.1	1760.0	1.95

Air System Sizing Summary for Gym East

Project Name: Barnbie Point
Prepared by: Holaday-Parks
05/28/2025
02:01PM

Air System Information
Air System Name: **Gym East**
Air System Type: **Single Zone CAV**
Number of zones: **1**
Floor Area: **2152.0** sqft
Location: **Seattle IAP, Washington**

Sizing Calculation Information
Calculation Months: **Jan to Dec**
Calculation method: **Radiant Time Series**

Central Cooling Coil Sizing Data
Total coil load: **7.3** Tons
Total coil load: **87.5** MBH
Sensible coil load: **70.3** MBH
Coil airflow: **2894** CFM
Sensible heat ratio: **0.804**
Area per unit load: **295.3** sqft/Ton
Load per unit area: **40.6** BTU/(hr-sqft)
Load occurs at: **Jun 1400**
OA DB / WB: **83.5/66.8** F
Entering DB / WB: **78.0/64.3** F
Leaving DB / WB: **55.1/53.9** F
Coil ADP: **52.6** F
Bypass Factor: **0.100**
Resulting RH: **51** %
Design supply temp: **55.0** F

Central Heating Coil Sizing Data
Max coil load: **54.8** MBH
Coil airflow: **2894** CFM
Load per unit area: **25.5** BTU/(hr-sqft)
Load occurs at: **Des Htg**
Ent DB / Lvg DB: **55.1/72.9** F

Supply Fan Sizing Data
Actual max airflow: **2894** CFM
Standard airflow: **2847** CFM
Actual max airflow per unit area: **1.34** CFM/sqft
Fan motor BHP: **0.63** BHP
Fan motor kW: **0.47** kW
Fan static: **0.75** in wg

Outdoor Ventilation Air Data
Design airflow: **900** CFM
Airflow per unit floor area: **0.42** CFM/sqft
Airflow per person: **8.57** CFM/person

Space Sizing Data

Space Name	Maximum Cooling Sensible MBH	Design Airflow CFM	Time of Peak Load	Maximum Heating Load MBH	Space Floor Area sqft	Space CFM/sqft
Gym East	61.5	2894	Jun 1400	14.0	2152.0	1.34

Air System Sizing Summary for Gym West

Project Name: Barnbie Point
Prepared by: Holaday-Parks
05/28/2025
02:01PM

Air System Information
Air System Name: **Gym West**
Air System Type: **Single Zone CAV**
Number of zones: **1**
Floor Area: **1550.0** sqft
Location: **Seattle IAP, Washington**

Sizing Calculation Information
Calculation Months: **Jan to Dec**
Calculation method: **Radiant Time Series**

Central Cooling Coil Sizing Data
Total coil load: **4.1** Tons
Total coil load: **48.8** MBH
Sensible coil load: **34.7** MBH
Coil airflow: **1322** CFM
Sensible heat ratio: **0.711**
Area per unit load: **381.2** sqft/Ton
Load per unit area: **31.5** BTU/(hr-sqft)
Load occurs at: **Jul 1500**
OA DB / WB: **85.0/67.0** F
Entering DB / WB: **79.8/66.4** F
Leaving DB / WB: **55.1/53.9** F
Coil ADP: **52.3** F
Bypass Factor: **0.100**
Resulting RH: **61** %
Design supply temp: **55.0** F

Central Heating Coil Sizing Data
Max coil load: **34.3** MBH
Coil airflow: **1322** CFM
Load per unit area: **22.1** BTU/(hr-sqft)
Load occurs at: **Des Htg**
Ent DB / Lvg DB: **48.6/73.0** F

Supply Fan Sizing Data
Actual max airflow: **1322** CFM
Standard airflow: **1301** CFM
Actual max airflow per unit area: **0.85** CFM/sqft
Fan motor BHP: **0.29** BHP
Fan motor kW: **0.22** kW
Fan static: **0.75** in wg

Outdoor Ventilation Air Data
Design airflow: **600** CFM
Airflow per unit floor area: **0.39** CFM/sqft
Airflow per person: **40.00** CFM/person

Space Sizing Data

Space Name	Maximum Cooling Sensible MBH	Design Airflow CFM	Time of Peak Load	Maximum Heating Load MBH	Space Floor Area sqft	Space CFM/sqft
Gym West	28.1	1322	Jun 1600	5.8	1550.0	0.85

Air System Sizing Summary for VFC-1-01

Project Name: Barnbie Point
Prepared by: Holaday-Parks
05/28/2025
02:01PM

Air System Information
Air System Name: **VFC-1-01**
Air System Type: **Single Zone CAV**
Number of zones: **1**
Floor Area: **290.0** sqft
Location: **Seattle IAP, Washington**

Sizing Calculation Information
Calculation Months: **Jan to Dec**
Calculation method: **Radiant Time Series**

Central Cooling Coil Sizing Data
Total coil load: **0.7** Tons
Total coil load: **8.8** MBH
Sensible coil load: **8.0** MBH
Coil airflow: **367** CFM
Sensible heat ratio: **0.912**
Area per unit load: **395.7** sqft/Ton
Load per unit area: **30.3** BTU/(hr-sqft)
Load occurs at: **Oct 1300**
OA DB / WB: **77.6/63.3** F
Entering DB / WB: **75.4/62.1** F
Leaving DB / WB: **54.8/53.5** F
Coil ADP: **52.5** F
Bypass Factor: **0.100**
Resulting RH: **48** %
Design supply temp: **55.0** F

Central Heating Coil Sizing Data
Max coil load: **2.8** MBH
Coil airflow: **367** CFM
Load per unit area: **9.6** BTU/(hr-sqft)
Load occurs at: **Des Htg**
Ent DB / Lvg DB: **66.4/73.6** F

Supply Fan Sizing Data
Actual max airflow: **367** CFM
Standard airflow: **361** CFM
Actual max airflow per unit area: **1.26** CFM/sqft
Fan motor BHP: **0.03** BHP
Fan motor kW: **0.02** kW
Fan static: **0.30** in wg

Outdoor Ventilation Air Data
Design airflow: **30** CFM
Airflow per unit floor area: **0.10** CFM/sqft
Airflow per person: **5.00** CFM/person

Space Sizing Data

Space Name	Maximum Cooling Sensible MBH	Design Airflow CFM	Time of Peak Load	Maximum Heating Load MBH	Space Floor Area sqft	Space CFM/sqft
Classroom LRC-1 119	7.8	367	Oct 1300	1.4	290.0	1.26

Air System Sizing Summary for VFC-1-02

Project Name: Barnbie Point
Prepared by: Holaday-Parks
05/28/2025
02:01PM

Air System Information
Air System Name: **VFC-1-02**
Air System Type: **Single Zone CAV**
Number of zones: **1**
Floor Area: **861.0** sqft
Location: **Seattle IAP, Washington**

Sizing Calculation Information
Calculation Months: **Jan to Dec**
Calculation method: **Radiant Time Series**

Central Cooling Coil Sizing Data
Total coil load: **2.3** Tons
Total coil load: **27.3** MBH
Sensible coil load: **24.0** MBH
Coil airflow: **1091** CFM
Sensible heat ratio: **0.878**
Area per unit load: **378.2** sqft/Ton
Load per unit area: **31.7** BTU/(hr-sqft)
Load occurs at: **Sep 1400**
OA DB / WB: **82.5/65.8** F
Entering DB / WB: **76.3/63.1** F
Leaving DB / WB: **55.6/54.4** F
Coil ADP: **53.3** F
Bypass Factor: **0.100**
Resulting RH: **49** %
Design supply temp: **55.0** F

Central Heating Coil Sizing Data
Max coil load: **11.8** MBH
Coil airflow: **1091** CFM
Load per unit area: **13.7** BTU/(hr-sqft)
Load occurs at: **Des Htg**
Ent DB / Lvg DB: **64.8/75.0** F

Supply Fan Sizing Data
Actual max airflow: **1091** CFM
Standard airflow: **1074** CFM
Actual max airflow per unit area: **1.27** CFM/sqft
Fan motor BHP: **0.10** BHP
Fan motor kW: **0.07** kW
Fan static: **0.30** in wg

Outdoor Ventilation Air Data
Design airflow: **125** CFM
Airflow per unit floor area: **0.15** CFM/sqft
Airflow per person: **5.00** CFM/person

Space Sizing Data

Space Name	Maximum Cooling Sensible MBH	Design Airflow CFM	Time of Peak Load	Maximum Heating Load MBH	Space Floor Area sqft	Space CFM/sqft
Preschool 118	23.2	1091	Oct 1400	5.7	861.0	1.27

Air System Sizing Summary for VFC-1-03

Project Name: Barnbie Point
Prepared by: Holaday-Parks
05/28/2025
02:01PM

Air System Information
Air System Name: **VFC-1-03**
Air System Type: **Single Zone CAV**
Number of zones: **1**
Floor Area: **852.0** sqft
Location: **Seattle IAP, Washington**

Sizing Calculation Information
Calculation Months: **Jan to Dec**
Calculation method: **Radiant Time Series**

Central Cooling Coil Sizing Data
Total coil load: **2.1** Tons
Total coil load: **24.7** MBH
Sensible coil load: **21.2** MBH
Coil airflow: **949** CFM
Sensible heat ratio: **0.859**
Area per unit load: **413.8** sqft/Ton
Load per unit area: **29.0** BTU/(hr-sqft)
Load occurs at: **Jul 1700**
OA DB / WB: **83.2/66.4** F
Entering DB / WB: **76.4/63.2** F
Leaving DB / WB: **55.4/54.1** F
Coil ADP: **53.0** F
Bypass Factor: **0.100**
Resulting RH: **50** %
Design supply temp: **55.0** F

Central Heating Coil Sizing Data
Max coil load: **11.7** MBH
Coil airflow: **949** CFM
Load per unit area: **13.7** BTU/(hr-sqft)
Load occurs at: **Des Htg**
Ent DB / Lvg DB: **63.6/75.2** F

Supply Fan Sizing Data
Actual max airflow: **949** CFM
Standard airflow: **934** CFM
Actual max airflow per unit area: **1.11** CFM/sqft
Fan motor BHP: **0.08** BHP
Fan motor kW: **0.06** kW
Fan static: **0.30** in wg

Outdoor Ventilation Air Data
Design airflow: **125** CFM
Airflow per unit floor area: **0.15** CFM/sqft
Airflow per person: **5.00** CFM/person

Space Sizing Data

Space Name	Maximum Cooling Sensible MBH	Design Airflow CFM	Time of Peak Load	Maximum Heating Load MBH	Space Floor Area sqft	Space CFM/sqft
Preschool 117	20.2	949	Jun 1700	6.0	852.0	1.11

Air System Sizing Summary for VFC-1-04

Project Name: Barnbie Point
Prepared by: Holaday-Parks
05/28/2025
02:01PM

Air System Information
Air System Name: **VFC-1-04**
Air System Type: **Single Zone CAV**
Number of zones: **1**
Floor Area: **752.0** sqft
Location: **Seattle IAP, Washington**

Sizing Calculation Information
Calculation Months: **Jan to Dec**
Calculation method: **Radiant Time Series**

Central Cooling Coil Sizing Data
Total coil load: **1.5** Tons
Total coil load: **17.5** MBH
Sensible coil load: **13.8** MBH
Coil airflow: **575** CFM
Sensible heat ratio: **0.789**
Area per unit load: **516.4** sqft/Ton
Load per unit area: **23.2** BTU/(hr-sqft)
Load occurs at: **Jul 1500**
OA DB / WB: **85.0/67.0** F
Entering DB / WB: **77.9/64.6** F
Leaving DB / WB: **55.4/54.2** F
Coil ADP: **52.9** F
Bypass Factor: **0.100**
Resulting RH: **53** %
Design supply temp: **55.0** F

Central Heating Coil Sizing Data
Max coil load: **9.9** MBH
Coil airflow: **575** CFM
Load per unit area: **13.2** BTU/(hr-sqft)
Load occurs at: **Des Htg**
Ent DB / Lvg DB: **57.8/74.1** F

Supply Fan Sizing Data
Actual max airflow: **575** CFM
Standard airflow: **566** CFM
Actual max airflow per unit area: **0.76** CFM/sqft
Fan motor BHP: **0.05** BHP
Fan motor kW: **0.04** kW
Fan static: **0.30** in wg

Outdoor Ventilation Air Data
Design airflow: **150** CFM
Airflow per unit floor area: **0.20** CFM/sqft
Airflow per person: **5.00** CFM/person

Space Sizing Data

Space Name	Maximum Cooling Sensible MBH	Design Airflow CFM	Time of Peak Load	Maximum Heating Load MBH	Space Floor Area sqft	Space CFM/sqft
Classroom 116	12.2	575	Jun 1400	2.5	752.0	0.76

Air System Sizing Summary for VFC-1-05

Project Name: Barnbie Point
Prepared by: Holaday-Parks
05/28/2025
02:01PM

Air System Information
Air System Name: **VFC-1-05**
Air System Type: **Single Zone CAV**
Number of zones: **1**
Floor Area: **752.0** sqft
Location: **Seattle IAP, Washington**

Sizing Calculation Information
Calculation Months: **Jan to Dec**
Calculation method: **Radiant Time Series**

Central Cooling Coil Sizing Data
Total coil load: **1.5** Tons
Total coil load: **17.8** MBH
Sensible coil load: **13.9** MBH
Coil airflow: **585** CFM
Sensible heat ratio: **0.782**
Area per unit load: **508.0** sqft/Ton
Load per unit area: **23.6** BTU/(hr-sqft)
Load occurs at: **Jun 1500**
OA DB / WB: **84.0/67.0** F
Entering DB / WB: **77.6/64.6** F
Leaving DB / WB: **55.3/54.1** F
Coil ADP: **52.8** F
Bypass Factor: **0.100**
Resulting RH: **53** %
Design supply temp: **55.0** F

Central Heating Coil Sizing Data
Max coil load: **10.1** MBH
Coil airflow: **585** CFM
Load per unit area: **13.4** BTU/(hr-sqft)
Load occurs at: **Des Htg**
Ent DB / Lvg DB: **57.9/74.1** F

Supply Fan Sizing Data
Actual max airflow: **585** CFM
Standard airflow: **576** CFM
Actual max airflow per unit area: **0.78** CFM/sqft
Fan motor BHP: **0.05** BHP
Fan motor kW: **0.04** kW
Fan static: **0.30** in wg

Outdoor Ventilation Air Data
Design airflow: **150** CFM
Airflow per unit floor area: **0.20** CFM/sqft
Airflow per person: **5.00** CFM/person

Space Sizing Data

Space Name	Maximum Cooling Sensible MBH	Design Airflow CFM	Time of Peak Load	Maximum Heating Load MBH	Space Floor Area sqft	Space CFM/sqft
Classroom 115	12.4	585	Jun 1400	2.7	752.0	0.78

Air System Sizing Summary for VFC-1-06

Project Name: Barnbie Point
Prepared by: Holaday-Parks
05/28/2025
02:01PM

Air System Information
Air System Name: **VFC-1-06**
Air System Type: **Single Zone CAV**
Number of zones: **1**
Floor Area: **290.0** sqft
Location: **Seattle IAP, Washington**

Sizing Calculation Information
Calculation Months: **Jan to Dec**
Calculation method: **Radiant Time Series**

Central Cooling Coil Sizing Data
Total coil load: **0.3** Tons
Total coil load: **3.8** MBH
Sensible coil load: **3.4** MBH
Coil airflow: **155** CFM
Sensible heat ratio: **0.885**
Area per unit load: **907.8** sqft/Ton
Load per unit area: **13.2** BTU/(hr-sqft)
Load occurs at: **Jun 1500**
OA DB / WB: **84.0/67.0** F
Entering DB / WB: **76.2/63.0** F
Leaving DB / WB: **55.5/54.3** F
Coil ADP: **53.3** F
Bypass Factor: **0.100**
Resulting RH: **49** %
Design supply temp: **55.0** F

Central Heating Coil Sizing Data
Max coil load: **2.6** MBH
Coil airflow: **155** CFM
Load per unit area: **9.1** BTU/(hr-sqft)
Load occurs at: **Des Htg**
Ent DB / Lvg DB: **65.4/81.5** F

Supply Fan Sizing Data
Actual max airflow: **155** CFM
Standard airflow: **152** CFM
Actual max airflow per unit area: **0.53** CFM/sqft
Fan motor BHP: **0.01** BHP
Fan motor kW: **0.01** kW
Fan static: **0.30** in wg

Outdoor Ventilation Air Data
Design airflow: **15** CFM
Airflow per unit floor area: **0.05** CFM/sqft
Airflow per person: **5.00** CFM/person

Space Sizing Data

Space Name	Maximum Cooling Sensible MBH	Design Airflow CFM	Time of Peak Load	Maximum Heating Load MBH	Space Floor Area sqft	Space CFM/sqft
Office 114C	1.1	54	Jun 1800	0.7	95.0	0.57
Office 114B	1.1	50	Jun 1800	0.6	100.0	0.50
Office 114D	1.1	50	Jun 1800	0.7	95.0	0.53
Zone	**3.3**	**155**	**Jun 1800**	**1.9**	**290.0**	**0.53**

Note: Table contains data for all spaces controlled by a single thermostat:
Space sizing basis: **Peak space load**
Zone sizing basis: **Peak zone load**

HOLADAY-PARKS, INC.
SMART Mechanical Solutions©
Mechanical Solutions • Energy Services
Building Controls • Service & Maintenance
4600 S. 134TH PLACE
TUKWILA, WA 98168 • (206) 248-9700
HOLADAYPARKS.com
WA LICENSE NUMBER: HOLADPI379N0

MAXWELL GREENSTREET — STATE OF WASHINGTON — 52066 — REGISTERED PROFESSIONAL ENGINEER
12/15/2025

APPROVED FOR CONSTRUCTION

3700 E MERCER WAY
BARNABIE POINT

NO.	DATE	DESCRIPTION
3	12/15/25	100% CONSTRUCTION DOCS
2	08/25/25	90% CONSTRUCTION DOCS
1	06/04/25	BUILDING PERMIT

4 JUNE 2025
BUILDING PERMIT

PROJECT: 64605

LOAD CALCULATIONS

M0.04

ORIGINAL SHEET SIZE: 24" X 36"

ALL RIGHTS RESERVED: THESE DRAWINGS BELONG IN ANY FORM TO HOLADAY-PARKS, INC. NO PART OF THIS DOCUMENT MAY BE REPRODUCED IN ANY FORM OR BY ANY MEANS WITHOUT PERMISSION IN WRITING FROM HOLADAY PARKS, INC.

Air System Sizing Summary for VFC-1-07

Project Name: Barnbie Point
Prepared by: Holaday-Parks
05/28/2025
02:01PM

Air System Information

Air System Name:	VFC-1-07	Number of zones:	1
Air System Type:	Single Zone CAV	Floor Area:	735.0 sqft
		Location:	Seattle IAP, Washington

Sizing Calculation Information

Calculation Months:	Jan to Dec	Calculation method:	Radiant Time Series

Central Cooling Coil Sizing Data

Total coil load:	1.4 Tons	Load occurs at:	Jul 1400
Total coil load:	17.4 MBH	OA DB / WB:	84.5/66.8 F
Sensible coil load:	13.7 MBH	Entering DB / WB:	77.8/64.6 F
Coil airflow:	571 CFM	Leaving DB / WB:	55.3/54.1 F
Sensible heat ratio:	0.787	Coil ADP:	52.8 F
Area per unit load:	507.8 sqft/Ton	Bypass Factor:	0.100
Load per unit area:	23.6 BTU/(hr-sqft)	Resulting RH:	53 %
		Design supply temp:	55.0 F

Central Heating Coil Sizing Data

Max coil load:	9.9 MBH	Load occurs at:	Des Htg
Coil airflow:	571 CFM	Ent DB / Lvg DB:	57.7/74.1 F
Load per unit area:	13.5 BTU/(hr-sqft)		

Supply Fan Sizing Data

Actual max airflow:	571 CFM	Fan motor BHP:	0.05 BHP
Standard airflow:	562 CFM	Fan motor kW:	0.04 kW
Actual max airflow per unit area:	0.78 CFM/sqft	Fan static:	0.30 in wg

Outdoor Ventilation Air Data

Design airflow:	150 CFM	Airflow per person:	5.00 CFM/person
Airflow per unit floor area:	0.20 CFM/sqft		

Space Sizing Data

Space Name	Maximum Cooling Sensible MBH	Design Airflow CFM	Time of Peak Load	Maximum Heating Load MBH	Space Floor Area sqft	Space CFM/sqft
Classroom 113	12.1	571	Jun 1400	2.5	735.0	0.78

Air System Sizing Summary for VFC-1-08

Project Name: Barnbie Point
Prepared by: Holaday-Parks
05/28/2025
02:01PM

Air System Information

Air System Name:	VFC-1-08	Number of zones:	1
Air System Type:	Single Zone CAV	Floor Area:	178.0 sqft
		Location:	Seattle IAP, Washington

Sizing Calculation Information

Calculation Months:	Jan to Dec	Calculation method:	Radiant Time Series

Central Cooling Coil Sizing Data

Total coil load:	0.3 Tons	Load occurs at:	Jun 1500
Total coil load:	3.9 MBH	OA DB / WB:	84.0/67.0 F
Sensible coil load:	3.4 MBH	Entering DB / WB:	76.3/63.3 F
Coil airflow:	152 CFM	Leaving DB / WB:	55.5/54.3 F
Sensible heat ratio:	0.852	Coil ADP:	53.2 F
Area per unit load:	542.7 sqft/Ton	Bypass Factor:	0.100
Load per unit area:	22.1 BTU/(hr-sqft)	Resulting RH:	50 %
		Design supply temp:	55.0 F

Central Heating Coil Sizing Data

Max coil load:	0.5 MBH	Load occurs at:	Des Htg
Coil airflow:	152 CFM	Ent DB / Lvg DB:	66.9/69.8 F
Load per unit area:	2.6 BTU/(hr-sqft)		

Supply Fan Sizing Data

Actual max airflow:	152 CFM	Fan motor BHP:	0.01 BHP
Standard airflow:	150 CFM	Fan motor kW:	0.01 kW
Actual max airflow per unit area:	0.85 CFM/sqft	Fan static:	0.30 in wg

Outdoor Ventilation Air Data

Design airflow:	10 CFM	Airflow per person:	5.00 CFM/person
Airflow per unit floor area:	0.06 CFM/sqft		

Space Sizing Data

Space Name	Maximum Cooling Sensible MBH	Design Airflow CFM	Time of Peak Load	Maximum Heating Load MBH	Space Floor Area sqft	Space CFM/sqft
Kitchen 102	3.2	152	Jan 000	0.0	178.0	0.85

Air System Sizing Summary for VFC-1-09

Project Name: Barnbie Point
Prepared by: Holaday-Parks
05/28/2025
02:01PM

Air System Information

Air System Name:	VFC-1-09	Number of zones:	1
Air System Type:	Single Zone CAV	Floor Area:	85.0 sqft
		Location:	Seattle IAP, Washington

Sizing Calculation Information

Calculation Months:	Jan to Dec	Calculation method:	Radiant Time Series

Central Cooling Coil Sizing Data

Total coil load:	0.3 Tons	Load occurs at:	Oct 1300
Total coil load:	3.8 MBH	OA DB / WB:	77.6/63.3 F
Sensible coil load:	3.6 MBH	Entering DB / WB:	75.2/61.9 F
Coil airflow:	168 CFM	Leaving DB / WB:	55.1/53.8 F
Sensible heat ratio:	0.937	Coil ADP:	52.8 F
Area per unit load:	265.6 sqft/Ton	Bypass Factor:	0.100
Load per unit area:	45.2 BTU/(hr-sqft)	Resulting RH:	47 %
		Design supply temp:	55.0 F

Central Heating Coil Sizing Data

Max coil load:	0.9 MBH	Load occurs at:	Des Htg
Coil airflow:	168 CFM	Ent DB / Lvg DB:	70.1/75.2 F
Load per unit area:	10.8 BTU/(hr-sqft)		

Supply Fan Sizing Data

Actual max airflow:	168 CFM	Fan motor BHP:	0.01 BHP
Standard airflow:	165 CFM	Fan motor kW:	0.01 kW
Actual max airflow per unit area:	1.98 CFM/sqft	Fan static:	0.30 in wg

Outdoor Ventilation Air Data

Design airflow:	0 CFM	Airflow per person:	0.00 CFM/person
Airflow per unit floor area:	0.00 CFM/sqft		

Space Sizing Data

Space Name	Maximum Cooling Sensible MBH	Design Airflow CFM	Time of Peak Load	Maximum Heating Load MBH	Space Floor Area sqft	Space CFM/sqft
Office 112A	3.6	168	Oct 1300	0.9	85.0	1.98

Air System Sizing Summary for VFC-1-10

Project Name: Barnbie Point
Prepared by: Holaday-Parks
05/28/2025
02:01PM

Air System Information

Air System Name:	VFC-1-10	Number of zones:	1
Air System Type:	Single Zone CAV	Floor Area:	1242.0 sqft
		Location:	Seattle IAP, Washington

Sizing Calculation Information

Calculation Months:	Jan to Dec	Calculation method:	Radiant Time Series

Central Cooling Coil Sizing Data

Total coil load:	0.5 Tons	Load occurs at:	Jul 1600
Total coil load:	6.1 MBH	OA DB / WB:	84.5/66.8 F
Sensible coil load:	5.4 MBH	Entering DB / WB:	76.4/62.7 F
Coil airflow:	234 CFM	Leaving DB / WB:	54.8/53.5 F
Sensible heat ratio:	0.880	Coil ADP:	52.4 F
Area per unit load:	2445.1 sqft/Ton	Bypass Factor:	0.100
Load per unit area:	4.9 BTU/(hr-sqft)	Resulting RH:	48 %
		Design supply temp:	55.0 F

Central Heating Coil Sizing Data

Max coil load:	1.2 MBH	Load occurs at:	Des Htg
Coil airflow:	234 CFM	Ent DB / Lvg DB:	65.0/69.8 F
Load per unit area:	1.0 BTU/(hr-sqft)		

Supply Fan Sizing Data

Actual max airflow:	234 CFM	Fan motor BHP:	0.02 BHP
Standard airflow:	230 CFM	Fan motor kW:	0.02 kW
Actual max airflow per unit area:	0.19 CFM/sqft	Fan static:	0.30 in wg

Outdoor Ventilation Air Data

Design airflow:	25 CFM	Airflow per person:	5.00 CFM/person
Airflow per unit floor area:	0.02 CFM/sqft		

Space Sizing Data

Space Name	Maximum Cooling Sensible MBH	Design Airflow CFM	Time of Peak Load	Maximum Heating Load MBH	Space Floor Area sqft	Space CFM/sqft
Circulation Corridor 111	5.0	234	Jan 000	0.0	1242.0	0.19

Air System Sizing Summary for VFC-1-11

Project Name: Barnbie Point
Prepared by: Holaday-Parks
05/28/2025
02:01PM

Air System Information

Air System Name:	VFC-1-11	Number of zones:	1
Air System Type:	Single Zone CAV	Floor Area:	430.0 sqft
		Location:	Seattle IAP, Washington

Sizing Calculation Information

Calculation Months:	Jan to Dec	Calculation method:	Radiant Time Series

Central Cooling Coil Sizing Data

Total coil load:	0.5 Tons	Load occurs at:	Jun 1500
Total coil load:	5.8 MBH	OA DB / WB:	84.0/67.0 F
Sensible coil load:	4.9 MBH	Entering DB / WB:	76.7/63.4 F
Coil airflow:	217 CFM	Leaving DB / WB:	55.3/54.1 F
Sensible heat ratio:	0.851	Coil ADP:	52.9 F
Area per unit load:	891.7 sqft/Ton	Bypass Factor:	0.100
Load per unit area:	13.5 BTU/(hr-sqft)	Resulting RH:	50 %
		Design supply temp:	55.0 F

Central Heating Coil Sizing Data

Max coil load:	1.5 MBH	Load occurs at:	Des Htg
Coil airflow:	217 CFM	Ent DB / Lvg DB:	63.5/69.8 F
Load per unit area:	3.4 BTU/(hr-sqft)		

Supply Fan Sizing Data

Actual max airflow:	217 CFM	Fan motor BHP:	0.02 BHP
Standard airflow:	213 CFM	Fan motor kW:	0.01 kW
Actual max airflow per unit area:	0.50 CFM/sqft	Fan static:	0.30 in wg

Outdoor Ventilation Air Data

Design airflow:	30 CFM	Airflow per person:	5.00 CFM/person
Airflow per unit floor area:	0.07 CFM/sqft		

Space Sizing Data

Space Name	Maximum Cooling Sensible MBH	Design Airflow CFM	Time of Peak Load	Maximum Heating Load MBH	Space Floor Area sqft	Space CFM/sqft
Admin 114	4.0	186	Jan 000	0.0	343.0	0.54
Office 114A	0.6	30	Jan 000	0.0	87.0	0.35
Zone	**4.6**	**217**	**Jan 000**	**0.0**	**430.0**	**0.50**

Note: Table contains data for all spaces controlled by a single thermostat:
Space sizing basis: **Peak space load**
Zone sizing basis: **Peak zone load**

Air System Sizing Summary for VFC-1-12

Project Name: Barnbie Point
Prepared by: Holaday-Parks
05/28/2025
02:01PM

Air System Information

Air System Name:	VFC-1-12	Number of zones:	1
Air System Type:	Single Zone CAV	Floor Area:	120.0 sqft
		Location:	Seattle IAP, Washington

Sizing Calculation Information

Calculation Months:	Jan to Dec	Calculation method:	Radiant Time Series

Central Cooling Coil Sizing Data

Total coil load:	0.3 Tons	Load occurs at:	Oct 1300
Total coil load:	4.0 MBH	OA DB / WB:	77.6/63.3 F
Sensible coil load:	3.7 MBH	Entering DB / WB:	75.5/62.3 F
Coil airflow:	177 CFM	Leaving DB / WB:	55.7/54.4 F
Sensible heat ratio:	0.939	Coil ADP:	53.5 F
Area per unit load:	363.0 sqft/Ton	Bypass Factor:	0.100
Load per unit area:	33.1 BTU/(hr-sqft)	Resulting RH:	48 %
		Design supply temp:	55.0 F

Central Heating Coil Sizing Data

Max coil load:	0.9 MBH	Load occurs at:	Des Htg
Coil airflow:	177 CFM	Ent DB / Lvg DB:	70.0/75.0 F
Load per unit area:	7.8 BTU/(hr-sqft)		

Supply Fan Sizing Data

Actual max airflow:	177 CFM	Fan motor BHP:	0.02 BHP
Standard airflow:	174 CFM	Fan motor kW:	0.01 kW
Actual max airflow per unit area:	1.47 CFM/sqft	Fan static:	0.30 in wg

Outdoor Ventilation Air Data

Design airflow:	0 CFM	Airflow per person:	0.00 CFM/person
Airflow per unit floor area:	0.00 CFM/sqft		

Space Sizing Data

Space Name	Maximum Cooling Sensible MBH	Design Airflow CFM	Time of Peak Load	Maximum Heating Load MBH	Space Floor Area sqft	Space CFM/sqft
Office 107	3.8	177	Oct 1300	1.0	120.0	1.47

Air System Sizing Summary for VFC-2-01

Project Name: Barnbie Point
Prepared by: Holaday-Parks
05/28/2025
02:01PM

Air System Information

Air System Name:	VFC-2-01	Number of zones:	1
Air System Type:	Single Zone CAV	Floor Area:	750.0 sqft
		Location:	Seattle IAP, Washington

Sizing Calculation Information

Calculation Months:	Jan to Dec	Calculation method:	Radiant Time Series

Central Cooling Coil Sizing Data

Total coil load:	1.9 Tons	Load occurs at:	Sep 1300
Total coil load:	23.1 MBH	OA DB / WB:	81.0/65.3 F
Sensible coil load:	17.9 MBH	Entering DB / WB:	76.4/64.4 F
Coil airflow:	819 CFM	Leaving DB / WB:	55.9/54.8 F
Sensible heat ratio:	0.773	Coil ADP:	53.6 F
Area per unit load:	389.9 sqft/Ton	Bypass Factor:	0.100
Load per unit area:	30.8 BTU/(hr-sqft)	Resulting RH:	55 %
		Design supply temp:	55.0 F

Central Heating Coil Sizing Data

Max coil load:	9.2 MBH	Load occurs at:	Des Htg
Coil airflow:	819 CFM	Ent DB / Lvg DB:	62.3/72.9 F
Load per unit area:	12.3 BTU/(hr-sqft)		

Supply Fan Sizing Data

Actual max airflow:	819 CFM	Fan motor BHP:	0.07 BHP
Standard airflow:	806 CFM	Fan motor kW:	0.05 kW
Actual max airflow per unit area:	1.09 CFM/sqft	Fan static:	0.30 in wg

Outdoor Ventilation Air Data

Design airflow:	135 CFM	Airflow per person:	5.00 CFM/person
Airflow per unit floor area:	0.18 CFM/sqft		

Space Sizing Data

Space Name	Maximum Cooling Sensible MBH	Design Airflow CFM	Time of Peak Load	Maximum Heating Load MBH	Space Floor Area sqft	Space CFM/sqft
Classroom 207	17.4	819	Oct 1300	2.5	750.0	1.09

Air System Sizing Summary for VFC-2-02

Project Name: Barnbie Point
Prepared by: Holaday-Parks
05/28/2025
02:01PM

Air System Information

Air System Name:	VFC-2-02	Number of zones:	1
Air System Type:	Single Zone CAV	Floor Area:	806.0 sqft
		Location:	Seattle IAP, Washington

Sizing Calculation Information

Calculation Months:	Jan to Dec	Calculation method:	Radiant Time Series

Central Cooling Coil Sizing Data

Total coil load:	2.1 Tons	Load occurs at:	Sep 1400
Total coil load:	24.7 MBH	OA DB / WB:	82.5/65.8 F
Sensible coil load:	19.0 MBH	Entering DB / WB:	76.5/64.4 F
Coil airflow:	849 CFM	Leaving DB / WB:	55.5/54.4 F
Sensible heat ratio:	0.770	Coil ADP:	53.1 F
Area per unit load:	392.0 sqft/Ton	Bypass Factor:	0.100
Load per unit area:	30.6 BTU/(hr-sqft)	Resulting RH:	55 %
		Design supply temp:	55.0 F

Central Heating Coil Sizing Data

Max coil load:	10.1 MBH	Load occurs at:	Des Htg
Coil airflow:	849 CFM	Ent DB / Lvg DB:	62.0/73.2 F
Load per unit area:	12.6 BTU/(hr-sqft)		

Supply Fan Sizing Data

Actual max airflow:	849 CFM	Fan motor BHP:	0.07 BHP
Standard airflow:	835 CFM	Fan motor kW:	0.06 kW
Actual max airflow per unit area:	1.05 CFM/sqft	Fan static:	0.30 in wg

Outdoor Ventilation Air Data

Design airflow:	145 CFM	Airflow per person:	5.00 CFM/person
Airflow per unit floor area:	0.18 CFM/sqft		

Space Sizing Data

Space Name	Maximum Cooling Sensible MBH	Design Airflow CFM	Time of Peak Load	Maximum Heating Load MBH	Space Floor Area sqft	Space CFM/sqft
Classroom 206	18.0	849	Oct 1300	3.1	806.0	1.05

Air System Sizing Summary for VFC-2-03

Project Name: Barnbie Point
Prepared by: Holaday-Parks
05/28/2025
02:01PM

Air System Information

Air System Name:	VFC-2-03	Number of zones:	1
Air System Type:	Single Zone CAV	Floor Area:	712.0 sqft
		Location:	Seattle IAP, Washington

Sizing Calculation Information

Calculation Months:	Jan to Dec	Calculation method:	Radiant Time Series

Central Cooling Coil Sizing Data

Total coil load:	1.7 Tons	Load occurs at:	Jul 1700
Total coil load:	20.7 MBH	OA DB / WB:	83.2/66.4 F
Sensible coil load:	17.4 MBH	Entering DB / WB:	76.2/63.4 F
Coil airflow:	798 CFM	Leaving DB / WB:	55.6/54.5 F
Sensible heat ratio:	0.842	Coil ADP:	53.4 F
Area per unit load:	413.5 sqft/Ton	Bypass Factor:	0.100
Load per unit area:	29.0 BTU/(hr-sqft)	Resulting RH:	51 %
		Design supply temp:	55.0 F

Central Heating Coil Sizing Data

Max coil load:	7.5 MBH	Load occurs at:	Des Htg
Coil airflow:	798 CFM	Ent DB / Lvg DB:	65.4/74.2 F
Load per unit area:	10.5 BTU/(hr-sqft)		

Supply Fan Sizing Data

Actual max airflow:	798 CFM	Fan motor BHP:	0.07 BHP
Standard airflow:	785 CFM	Fan motor kW:	0.05 kW
Actual max airflow per unit area:	1.12 CFM/sqft	Fan static:	0.30 in wg

Outdoor Ventilation Air Data

Design airflow:	75 CFM	Airflow per person:	5.00 CFM/person
Airflow per unit floor area:	0.11 CFM/sqft		

Space Sizing Data

Space Name	Maximum Cooling Sensible MBH	Design Airflow CFM	Time of Peak Load	Maximum Heating Load MBH	Space Floor Area sqft	Space CFM/sqft
Breakout 200A	17.0	798	Jun 1700	4.1	712.0	1.12

HOLADAY-PARKS, INC.
SMART Mechanical Solutions©
Mechanical Solutions • Energy Services
Building Controls • Service & Maintenance
4600 S. 134TH PLACE
TUKWILA, WA 98168 • (206) 248-9700
HOLADAYPARKS.com
WA LICENSE NUMBER: HOLADPI379N0

MAXWELL GREENSTREET — STATE OF WASHINGTON — 52066 — REGISTERED PROFESSIONAL ENGINEER
12/15/2025

APPROVED FOR CONSTRUCTION

3700 E MERCER WAY
BARNABIE POINT

NO.	DATE	DESCRIPTION
3	12/15/25	100% CONSTRUCTION DOCS
2	08/25/25	90% CONSTRUCTION DOCS
1	06/04/25	BUILDING PERMIT

4 JUNE 2025

BUILDING PERMIT

PROJECT: 64605

LOAD CALCULATIONS

M0.05

ORIGINAL SHEET SIZE: 24" X 36"

ALL RIGHTS RESERVED: THESE DRAWINGS BELONG IN ANY FORM TO HOLADAY-PARKS, INC. NO PART OF THIS DOCUMENT MAY BE REPRODUCED IN ANY FORM OR BY ANY MEANS WITHOUT PERMISSION IN WRITING FROM HOLADAY PARKS, INC.

Air System Sizing Summary for VFC-2-04

Project Name: Barnbie Point
Prepared by: Holaday-Parks
05/28/2025
02:01PM

Air System Information
Air System Name: VFC-2-04
Air System Type: Single Zone CAV
Number of zones: 1
Floor Area: 181.0 sqft
Location: Seattle IAP, Washington

Sizing Calculation Information
Calculation Months: Jan to Dec
Calculation method: Radiant Time Series

Central Cooling Coil Sizing Data
Total coil load: 0.3 Tons
Total coil load: 4.1 MBH
Sensible coil load: 3.5 MBH
Coil airflow: 160 CFM
Sensible heat ratio: 0.837
Area per unit load: 524.0 sqft/Ton
Load per unit area: 22.9 BTU/(hr-sqft)
Load occurs at: Jun 1800
OA DB / WB: 80.2/65.8 F
Entering DB / WB: 75.9/63.3 F
Leaving DB / WB: 55.4/54.2 F
Coil ADP: 53.1 F
Bypass Factor: 0.100
Resulting RH: 51 %
Design supply temp: 55.0 F

Central Heating Coil Sizing Data
Max coil load: 1.7 MBH
Coil airflow: 160 CFM
Load per unit area: 9.5 BTU/(hr-sqft)
Load occurs at: Des Htg
Ent DB / Lvg DB: 65.4/75.5 F

Supply Fan Sizing Data
Actual max airflow: 160 CFM
Standard airflow: 157 CFM
Actual max airflow per unit area: 0.88 CFM/sqft
Fan motor BHP: 0.01 BHP
Fan motor kW: 0.01 kW
Fan static: 0.30 in wg

Outdoor Ventilation Air Data
Design airflow: 15 CFM
Airflow per unit floor area: 0.08 CFM/sqft
Airflow per person: 5.00 CFM/person

Space Sizing Data

Space Name	Maximum Cooling Sensible MBH	Design Airflow CFM	Time of Peak Load	Maximum Heating Load MBH	Space Floor Area sqft	Space CFM/sqft
LRC-2	3.4	160	Jun 1800	1.0	181.0	0.88

Air System Sizing Summary for VFC-2-05

Project Name: Barnbie Point
Prepared by: Holaday-Parks
05/28/2025
02:01PM

Air System Information
Air System Name: VFC-2-05
Air System Type: Single Zone CAV
Number of zones: 1
Floor Area: 744.0 sqft
Location: Seattle IAP, Washington

Sizing Calculation Information
Calculation Months: Jan to Dec
Calculation method: Radiant Time Series

Central Cooling Coil Sizing Data
Total coil load: 1.4 Tons
Total coil load: 16.3 MBH
Sensible coil load: 11.9 MBH
Coil airflow: 502 CFM
Sensible heat ratio: 0.729
Area per unit load: 547.5 sqft/Ton
Load per unit area: 21.9 BTU/(hr-sqft)
Load occurs at: Jun 1500
OA DB / WB: 84.0/67.0 F
Entering DB / WB: 77.2/65.0 F
Leaving DB / WB: 55.0/53.9 F
Coil ADP: 52.5 F
Bypass Factor: 0.100
Resulting RH: 56 %
Design supply temp: 55.0 F

Central Heating Coil Sizing Data
Max coil load: 7.9 MBH
Coil airflow: 502 CFM
Load per unit area: 10.7 BTU/(hr-sqft)
Load occurs at: Des Htg
Ent DB / Lvg DB: 59.8/74.6 F

Supply Fan Sizing Data
Actual max airflow: 502 CFM
Standard airflow: 494 CFM
Actual max airflow per unit area: 0.68 CFM/sqft
Fan motor BHP: 0.04 BHP
Fan motor kW: 0.03 kW
Fan static: 0.30 in wg

Outdoor Ventilation Air Data
Design airflow: 110 CFM
Airflow per unit floor area: 0.15 CFM/sqft
Airflow per person: 5.00 CFM/person

Space Sizing Data

Space Name	Maximum Cooling Sensible MBH	Design Airflow CFM	Time of Peak Load	Maximum Heating Load MBH	Space Floor Area sqft	Space CFM/sqft
Classroom 204	10.7	502	Jun 1400	2.5	744.0	0.68

Air System Sizing Summary for VFC-2-06

Project Name: Barnbie Point
Prepared by: Holaday-Parks
05/28/2025
02:01PM

Air System Information
Air System Name: VFC-2-06
Air System Type: Single Zone CAV
Number of zones: 1
Floor Area: 743.0 sqft
Location: Seattle IAP, Washington

Sizing Calculation Information
Calculation Months: Jan to Dec
Calculation method: Radiant Time Series

Central Cooling Coil Sizing Data
Total coil load: 1.4 Tons
Total coil load: 16.3 MBH
Sensible coil load: 11.9 MBH
Coil airflow: 502 CFM
Sensible heat ratio: 0.729
Area per unit load: 546.3 sqft/Ton
Load per unit area: 22.0 BTU/(hr-sqft)
Load occurs at: Jun 1500
OA DB / WB: 84.0/67.0 F
Entering DB / WB: 77.2/65.0 F
Leaving DB / WB: 55.0/53.9 F
Coil ADP: 52.5 F
Bypass Factor: 0.100
Resulting RH: 56 %
Design supply temp: 55.0 F

Central Heating Coil Sizing Data
Max coil load: 7.7 MBH
Coil airflow: 502 CFM
Load per unit area: 10.4 BTU/(hr-sqft)
Load occurs at: Des Htg
Ent DB / Lvg DB: 59.7/74.1 F

Supply Fan Sizing Data
Actual max airflow: 502 CFM
Standard airflow: 494 CFM
Actual max airflow per unit area: 0.68 CFM/sqft
Fan motor BHP: 0.04 BHP
Fan motor kW: 0.03 kW
Fan static: 0.30 in wg

Outdoor Ventilation Air Data
Design airflow: 110 CFM
Airflow per unit floor area: 0.15 CFM/sqft
Airflow per person: 5.00 CFM/person

Space Sizing Data

Space Name	Maximum Cooling Sensible MBH	Design Airflow CFM	Time of Peak Load	Maximum Heating Load MBH	Space Floor Area sqft	Space CFM/sqft
Classroom 203	10.7	502	Jun 1400	2.5	743.0	0.68

Air System Sizing Summary for VFC-2-07

Project Name: Barnbie Point
Prepared by: Holaday-Parks
05/28/2025
02:01PM

Air System Information
Air System Name: VFC-2-07
Air System Type: Single Zone CAV
Number of zones: 1
Floor Area: 734.0 sqft
Location: Seattle IAP, Washington

Sizing Calculation Information
Calculation Months: Jan to Dec
Calculation method: Radiant Time Series

Central Cooling Coil Sizing Data
Total coil load: 1.4 Tons
Total coil load: 16.4 MBH
Sensible coil load: 11.9 MBH
Coil airflow: 500 CFM
Sensible heat ratio: 0.728
Area per unit load: 538.1 sqft/Ton
Load per unit area: 22.3 BTU/(hr-sqft)
Load occurs at: Jun 1500
OA DB / WB: 84.0/67.0 F
Entering DB / WB: 77.2/64.9 F
Leaving DB / WB: 54.8/53.7 F
Coil ADP: 52.3 F
Bypass Factor: 0.100
Resulting RH: 56 %
Design supply temp: 55.0 F

Central Heating Coil Sizing Data
Max coil load: 7.7 MBH
Coil airflow: 500 CFM
Load per unit area: 10.6 BTU/(hr-sqft)
Load occurs at: Des Htg
Ent DB / Lvg DB: 59.6/74.2 F

Supply Fan Sizing Data
Actual max airflow: 500 CFM
Standard airflow: 492 CFM
Actual max airflow per unit area: 0.68 CFM/sqft
Fan motor BHP: 0.04 BHP
Fan motor kW: 0.03 kW
Fan static: 0.30 in wg

Outdoor Ventilation Air Data
Design airflow: 110 CFM
Airflow per unit floor area: 0.15 CFM/sqft
Airflow per person: 5.00 CFM/person

Space Sizing Data

Space Name	Maximum Cooling Sensible MBH	Design Airflow CFM	Time of Peak Load	Maximum Heating Load MBH	Space Floor Area sqft	Space CFM/sqft
Classroom 202	10.6	500	Jun 1400	2.5	734.0	0.68

Air System Sizing Summary for VFC-2-08

Project Name: Barnbie Point
Prepared by: Holaday-Parks
05/28/2025
02:01PM

Air System Information
Air System Name: VFC-2-08
Air System Type: Single Zone CAV
Number of zones: 1
Floor Area: 328.0 sqft
Location: Seattle IAP, Washington

Sizing Calculation Information
Calculation Months: Jan to Dec
Calculation method: Radiant Time Series

Central Cooling Coil Sizing Data
Total coil load: 1.3 Tons
Total coil load: 15.6 MBH
Sensible coil load: 14.0 MBH
Coil airflow: 652 CFM
Sensible heat ratio: 0.895
Area per unit load: 252.3 sqft/Ton
Load per unit area: 47.6 BTU/(hr-sqft)
Load occurs at: Oct 1300
OA DB / WB: 77.6/63.3 F
Entering DB / WB: 75.7/62.7 F
Leaving DB / WB: 55.5/54.3 F
Coil ADP: 53.3 F
Bypass Factor: 0.100
Resulting RH: 49 %
Design supply temp: 55.0 F

Central Heating Coil Sizing Data
Max coil load: 4.6 MBH
Coil airflow: 652 CFM
Load per unit area: 14.1 BTU/(hr-sqft)
Load occurs at: Des Htg
Ent DB / Lvg DB: 67.1/73.8 F

Supply Fan Sizing Data
Actual max airflow: 652 CFM
Standard airflow: 642 CFM
Actual max airflow per unit area: 1.99 CFM/sqft
Fan motor BHP: 0.06 BHP
Fan motor kW: 0.04 kW
Fan static: 0.30 in wg

Outdoor Ventilation Air Data
Design airflow: 40 CFM
Airflow per unit floor area: 0.12 CFM/sqft
Airflow per person: 5.00 CFM/person

Space Sizing Data

Space Name	Maximum Cooling Sensible MBH	Design Airflow CFM	Time of Peak Load	Maximum Heating Load MBH	Space Floor Area sqft	Space CFM/sqft
Breakroom 211 / Kitchen	13.9	652	Oct 1300	2.8	328.0	1.99

Air System Sizing Summary for VFC-2-09

Project Name: Barnbie Point
Prepared by: Holaday-Parks
05/28/2025
02:01PM

Air System Information
Air System Name: VFC-2-09
Air System Type: Single Zone CAV
Number of zones: 1
Floor Area: 1282.0 sqft
Location: Seattle IAP, Washington

Sizing Calculation Information
Calculation Months: Jan to Dec
Calculation method: Radiant Time Series

Central Cooling Coil Sizing Data
Total coil load: 0.8 Tons
Total coil load: 9.0 MBH
Sensible coil load: 7.0 MBH
Coil airflow: 301 CFM
Sensible heat ratio: 0.773
Area per unit load: 1708.4 sqft/Ton
Load per unit area: 7.0 BTU/(hr-sqft)
Load occurs at: Jul 1500
OA DB / WB: 85.0/67.0 F
Entering DB / WB: 77.1/64.5 F
Leaving DB / WB: 55.3/54.2 F
Coil ADP: 52.9 F
Bypass Factor: 0.100
Resulting RH: 54 %
Design supply temp: 55.0 F

Central Heating Coil Sizing Data
Max coil load: 2.4 MBH
Coil airflow: 301 CFM
Load per unit area: 1.9 BTU/(hr-sqft)
Load occurs at: Des Htg
Ent DB / Lvg DB: 62.2/69.8 F

Supply Fan Sizing Data
Actual max airflow: 301 CFM
Standard airflow: 296 CFM
Actual max airflow per unit area: 0.23 CFM/sqft
Fan motor BHP: 0.03 BHP
Fan motor kW: 0.02 kW
Fan static: 0.30 in wg

Outdoor Ventilation Air Data
Design airflow: 50 CFM
Airflow per unit floor area: 0.04 CFM/sqft
Airflow per person: 5.00 CFM/person

Space Sizing Data

Space Name	Maximum Cooling Sensible MBH	Design Airflow CFM	Time of Peak Load	Maximum Heating Load MBH	Space Floor Area sqft	Space CFM/sqft
Circ. 200	6.4	301	Jan 000	0.0	1282.0	0.23

Air System Sizing Summary for VFC-2-10

Project Name: Barnbie Point
Prepared by: Holaday-Parks
05/28/2025
02:01PM

Air System Information
Air System Name: VFC-2-10
Air System Type: Single Zone CAV
Number of zones: 1
Floor Area: 627.0 sqft
Location: Seattle IAP, Washington

Sizing Calculation Information
Calculation Months: Jan to Dec
Calculation method: Radiant Time Series

Central Cooling Coil Sizing Data
Total coil load: 1.3 Tons
Total coil load: 15.1 MBH
Sensible coil load: 13.8 MBH
Coil airflow: 648 CFM
Sensible heat ratio: 0.912
Area per unit load: 498.2 sqft/Ton
Load per unit area: 24.1 BTU/(hr-sqft)
Load occurs at: Sep 1400
OA DB / WB: 82.5/65.8 F
Entering DB / WB: 75.6/62.5 F
Leaving DB / WB: 55.6/54.3 F
Coil ADP: 53.3 F
Bypass Factor: 0.100
Resulting RH: 49 %
Design supply temp: 55.0 F

Central Heating Coil Sizing Data
Max coil load: 3.6 MBH
Coil airflow: 648 CFM
Load per unit area: 5.7 BTU/(hr-sqft)
Load occurs at: Des Htg
Ent DB / Lvg DB: 67.6/72.7 F

Supply Fan Sizing Data
Actual max airflow: 648 CFM
Standard airflow: 638 CFM
Actual max airflow per unit area: 1.03 CFM/sqft
Fan motor BHP: 0.06 BHP
Fan motor kW: 0.04 kW
Fan static: 0.30 in wg

Outdoor Ventilation Air Data
Design airflow: 30 CFM
Airflow per unit floor area: 0.05 CFM/sqft
Airflow per person: 5.00 CFM/person

Space Sizing Data

Space Name	Maximum Cooling Sensible MBH	Design Airflow CFM	Time of Peak Load	Maximum Heating Load MBH	Space Floor Area sqft	Space CFM/sqft
Rental 213	13.8	648	Oct 1300	2.4	627.0	1.03

Air System Sizing Summary for VFC-2-11

Project Name: Barnbie Point
Prepared by: Holaday-Parks
05/28/2025
02:01PM

Air System Information
Air System Name: VFC-2-11
Air System Type: Single Zone CAV
Number of zones: 1
Floor Area: 361.0 sqft
Location: Seattle IAP, Washington

Sizing Calculation Information
Calculation Months: Jan to Dec
Calculation method: Radiant Time Series

Central Cooling Coil Sizing Data
Total coil load: 0.5 Tons
Total coil load: 5.7 MBH
Sensible coil load: 4.8 MBH
Coil airflow: 217 CFM
Sensible heat ratio: 0.846
Area per unit load: 756.8 sqft/Ton
Load per unit area: 15.9 BTU/(hr-sqft)
Load occurs at: Jul 1400
OA DB / WB: 84.5/66.8 F
Entering DB / WB: 76.3/63.3 F
Leaving DB / WB: 55.3/54.1 F
Coil ADP: 53.0 F
Bypass Factor: 0.100
Resulting RH: 50 %
Design supply temp: 55.0 F

Central Heating Coil Sizing Data
Max coil load: 2.0 MBH
Coil airflow: 217 CFM
Load per unit area: 5.6 BTU/(hr-sqft)
Load occurs at: Des Htg
Ent DB / Lvg DB: 65.8/74.6 F

Supply Fan Sizing Data
Actual max airflow: 217 CFM
Standard airflow: 214 CFM
Actual max airflow per unit area: 0.60 CFM/sqft
Fan motor BHP: 0.02 BHP
Fan motor kW: 0.01 kW
Fan static: 0.30 in wg

Outdoor Ventilation Air Data
Design airflow: 20 CFM
Airflow per unit floor area: 0.06 CFM/sqft
Airflow per person: 5.00 CFM/person

Space Sizing Data

Space Name	Maximum Cooling Sensible MBH	Design Airflow CFM	Time of Peak Load	Maximum Heating Load MBH	Space Floor Area sqft	Space CFM/sqft
Rental 212	4.6	217	Jun 1800	1.0	361.0	0.60

Air System Sizing Summary for VFC-2-12

Project Name: Barnbie Point
Prepared by: Holaday-Parks
05/28/2025
02:01PM

Air System Information
Air System Name: VFC-2-12
Air System Type: Single Zone CAV
Number of zones: 1
Floor Area: 120.0 sqft
Location: Seattle IAP, Washington

Sizing Calculation Information
Calculation Months: Jan to Dec
Calculation method: Radiant Time Series

Central Cooling Coil Sizing Data
Total coil load: 0.2 Tons
Total coil load: 2.5 MBH
Sensible coil load: 2.2 MBH
Coil airflow: 103 CFM
Sensible heat ratio: 0.905
Area per unit load: 579.0 sqft/Ton
Load per unit area: 20.7 BTU/(hr-sqft)
Load occurs at: Jun 1500
OA DB / WB: 84.0/67.0 F
Entering DB / WB: 75.7/62.4 F
Leaving DB / WB: 55.1/53.9 F
Coil ADP: 52.9 F
Bypass Factor: 0.100
Resulting RH: 48 %
Design supply temp: 55.0 F

Central Heating Coil Sizing Data
Max coil load: 1.5 MBH
Coil airflow: 103 CFM
Load per unit area: 12.8 BTU/(hr-sqft)
Load occurs at: Des Htg
Ent DB / Lvg DB: 67.7/81.8 F

Supply Fan Sizing Data
Actual max airflow: 103 CFM
Standard airflow: 101 CFM
Actual max airflow per unit area: 0.86 CFM/sqft
Fan motor BHP: 0.01 BHP
Fan motor kW: 0.01 kW
Fan static: 0.30 in wg

Outdoor Ventilation Air Data
Design airflow: 5 CFM
Airflow per unit floor area: 0.04 CFM/sqft
Airflow per person: 5.00 CFM/person

Space Sizing Data

Space Name	Maximum Cooling Sensible MBH	Design Airflow CFM	Time of Peak Load	Maximum Heating Load MBH	Space Floor Area sqft	Space CFM/sqft
Office 212B	2.2	103	Jun 1400	1.3	120.0	0.86

HOLADAY-PARKS, INC.
SMART Mechanical Solutions©
Mechanical Solutions • Energy Services
Building Controls • Service & Maintenance
4600 S. 134TH PLACE
TUKWILA, WA 98168 • (206) 248-9700
HOLADAYPARKS.com
WA LICENSE NUMBER: HOLADPI379N0

MAXWELL GREENSTREET — STATE OF WASHINGTON — 52096 — REGISTERED PROFESSIONAL ENGINEER
12/15/2025

APPROVED FOR CONSTRUCTION

3700 E MERCER WAY
BARNABIE POINT

NO.	DATE	DESCRIPTION
3	12/15/25	100% CONSTRUCTION DOCS
2	08/25/25	90% CONSTRUCTION DOCS
1	06/04/25	BUILDING PERMIT

4 JUNE 2025
BUILDING PERMIT

PROJECT: 64605

LOAD CALCULATIONS

M0.06

ORIGINAL SHEET SIZE: 24" X 36"

ALL RIGHTS RESERVED: THESE DRAWINGS BELONG IN ANY FORM TO HOLADAY-PARKS, INC. NO PART OF THIS DOCUMENT MAY BE REPRODUCED IN ANY FORM OR BY ANY MEANS WITHOUT PERMISSION IN WRITING FROM HOLADAY PARKS, INC.

Air System Sizing Summary for VFC-2-13

Project Name: Barnbie Point
Prepared by: Holaday-Parks
05/28/2025
02:01PM

Air System Information

Air System Name:	VFC-2-13	Number of zones:	1
Air System Type:	Single Zone CAV	Floor Area:	240.0 sqft
		Location:	Seattle IAP, Washington

Sizing Calculation Information

Calculation Months:	Jan to Dec	Calculation method:	Radiant Time Series

Central Cooling Coil Sizing Data

Total coil load:	0.4 Tons	Load occurs at:	Jul 1500
Total coil load:	5.0 MBH	OA DB / WB:	85.0/67.0 F
Sensible coil load:	3.8 MBH	Entering DB / WB:	77.3/64.8 F
Coil airflow:	162 CFM	Leaving DB / WB:	55.3/54.2 F
Sensible heat ratio:	0.758	Coil ADP:	52.9 F
Area per unit load:	578.9 sqft/Ton	Bypass Factor:	0.100
Load per unit area:	20.7 BTU/(hr-sqft)	Resulting RH:	55 %
		Design supply temp:	55.0 F

Central Heating Coil Sizing Data

Max coil load:	1.5 MBH	Load occurs at:	Des Htg
Coil airflow:	162 CFM	Ent DB / Lvg DB:	61.3/69.8 F
Load per unit area:	6.1 BTU/(hr-sqft)		

Supply Fan Sizing Data

Actual max airflow:	162 CFM	Fan motor BHP:	0.01 BHP
Standard airflow:	159 CFM	Fan motor kW:	0.01 kW
Actual max airflow per unit area:	0.67 CFM/sqft	Fan static:	0.30 in wg

Outdoor Ventilation Air Data

Design airflow:	30 CFM	Airflow per person:	5.00 CFM/person
Airflow per unit floor area:	0.13 CFM/sqft		

Space Sizing Data

Space Name	Maximum Cooling Sensible MBH	Design Airflow CFM	Time of Peak Load	Maximum Heating Load MBH	Space Floor Area sqft	Space CFM/sqft
Conf. 212A	3.4	162	Jan 000	0.0	240.0	0.67

Air System Sizing Summary for VFC-2-14

Project Name: Barnbie Point
Prepared by: Holaday-Parks
05/28/2025
02:01PM

Air System Information

Air System Name:	VFC-2-14	Number of zones:	1
Air System Type:	Single Zone CAV	Floor Area:	468.0 sqft
		Location:	Seattle IAP, Washington

Sizing Calculation Information

Calculation Months:	Jan to Dec	Calculation method:	Radiant Time Series

Central Cooling Coil Sizing Data

Total coil load:	0.7 Tons	Load occurs at:	Jul 1500
Total coil load:	8.9 MBH	OA DB / WB:	85.0/67.0 F
Sensible coil load:	6.9 MBH	Entering DB / WB:	77.1/64.5 F
Coil airflow:	296 CFM	Leaving DB / WB:	55.3/54.2 F
Sensible heat ratio:	0.771	Coil ADP:	52.9 F
Area per unit load:	631.7 sqft/Ton	Bypass Factor:	0.100
Load per unit area:	19.0 BTU/(hr-sqft)	Resulting RH:	54 %
		Design supply temp:	55.0 F

Central Heating Coil Sizing Data

Max coil load:	2.4 MBH	Load occurs at:	Des Htg
Coil airflow:	296 CFM	Ent DB / Lvg DB:	62.1/69.8 F
Load per unit area:	5.2 BTU/(hr-sqft)		

Supply Fan Sizing Data

Actual max airflow:	296 CFM	Fan motor BHP:	0.03 BHP
Standard airflow:	291 CFM	Fan motor kW:	0.02 kW
Actual max airflow per unit area:	0.63 CFM/sqft	Fan static:	0.30 in wg

Outdoor Ventilation Air Data

Design airflow:	50 CFM	Airflow per person:	5.00 CFM/person
Airflow per unit floor area:	0.11 CFM/sqft		

Space Sizing Data

Space Name	Maximum Cooling Sensible MBH	Design Airflow CFM	Time of Peak Load	Maximum Heating Load MBH	Space Floor Area sqft	Space CFM/sqft
Conf. 213A	6.3	296	Jan 000	0.0	468.0	0.63

Air System Sizing Summary for VFC-2-15

Project Name: Barnbie Point
Prepared by: Holaday-Parks
05/28/2025
02:01PM

Air System Information

Air System Name:	VFC-2-15	Number of zones:	1
Air System Type:	Single Zone CAV	Floor Area:	90.0 sqft
		Location:	Seattle IAP, Washington

Sizing Calculation Information

Calculation Months:	Jan to Dec	Calculation method:	Radiant Time Series

Central Cooling Coil Sizing Data

Total coil load:	0.1 Tons	Load occurs at:	Jun 1500
Total coil load:	1.3 MBH	OA DB / WB:	84.0/67.0 F
Sensible coil load:	1.0 MBH	Entering DB / WB:	76.4/63.6 F
Coil airflow:	46 CFM	Leaving DB / WB:	55.3/54.1 F
Sensible heat ratio:	0.823	Coil ADP:	53.0 F
Area per unit load:	857.1 sqft/Ton	Bypass Factor:	0.100
Load per unit area:	14.0 BTU/(hr-sqft)	Resulting RH:	51 %
		Design supply temp:	55.0 F

Central Heating Coil Sizing Data

Max coil load:	0.2 MBH	Load occurs at:	Des Htg
Coil airflow:	46 CFM	Ent DB / Lvg DB:	64.9/69.8 F
Load per unit area:	2.7 BTU/(hr-sqft)		

Supply Fan Sizing Data

Actual max airflow:	46 CFM	Fan motor BHP:	0.00 BHP
Standard airflow:	45 CFM	Fan motor kW:	0.00 kW
Actual max airflow per unit area:	0.51 CFM/sqft	Fan static:	0.30 in wg

Outdoor Ventilation Air Data

Design airflow:	5 CFM	Airflow per person:	5.00 CFM/person
Airflow per unit floor area:	0.06 CFM/sqft		

Space Sizing Data

Space Name	Maximum Cooling Sensible MBH	Design Airflow CFM	Time of Peak Load	Maximum Heating Load MBH	Space Floor Area sqft	Space CFM/sqft
Workrn 213B	1.0	46	Jan 000	0.0	90.0	0.51

Air System Sizing Summary for VFC-2-16

Project Name: Barnbie Point
Prepared by: Holaday-Parks
05/28/2025
02:01PM

Air System Information

Air System Name:	VFC-2-16	Number of zones:	1
Air System Type:	Single Zone CAV	Floor Area:	102.0 sqft
		Location:	Seattle IAP, Washington

Sizing Calculation Information

Calculation Months:	Jan to Dec	Calculation method:	Radiant Time Series

Central Cooling Coil Sizing Data

Total coil load:	0.3 Tons	Load occurs at:	Oct 1400
Total coil load:	4.0 MBH	OA DB / WB:	79.1/63.8 F
Sensible coil load:	3.8 MBH	Entering DB / WB:	75.4/62.1 F
Coil airflow:	178 CFM	Leaving DB / WB:	55.4/54.1 F
Sensible heat ratio:	0.945	Coil ADP:	53.2 F
Area per unit load:	306.2 sqft/Ton	Bypass Factor:	0.100
Load per unit area:	39.2 BTU/(hr-sqft)	Resulting RH:	48 %
		Design supply temp:	55.0 F

Central Heating Coil Sizing Data

Max coil load:	1.2 MBH	Load occurs at:	Des Htg
Coil airflow:	178 CFM	Ent DB / Lvg DB:	69.0/75.3 F
Load per unit area:	11.6 BTU/(hr-sqft)		

Supply Fan Sizing Data

Actual max airflow:	178 CFM	Fan motor BHP:	0.02 BHP
Standard airflow:	175 CFM	Fan motor kW:	0.01 kW
Actual max airflow per unit area:	1.75 CFM/sqft	Fan static:	0.30 in wg

Outdoor Ventilation Air Data

Design airflow:	5 CFM	Airflow per person:	5.00 CFM/person
Airflow per unit floor area:	0.05 CFM/sqft		

Space Sizing Data

Space Name	Maximum Cooling Sensible MBH	Design Airflow CFM	Time of Peak Load	Maximum Heating Load MBH	Space Floor Area sqft	Space CFM/sqft
Office 213C	3.8	178	Oct 1300	0.9	102.0	1.75

Air System Sizing Summary for VFC-3-01

Project Name: Barnbie Point
Prepared by: Holaday-Parks
05/28/2025
02:01PM

Air System Information

Air System Name:	VFC-3-01	Number of zones:	1
Air System Type:	Single Zone CAV	Floor Area:	179.0 sqft
		Location:	Seattle IAP, Washington

Sizing Calculation Information

Calculation Months:	Jan to Dec	Calculation method:	Radiant Time Series

Central Cooling Coil Sizing Data

Total coil load:	0.5 Tons	Load occurs at:	Sep 1400
Total coil load:	5.9 MBH	OA DB / WB:	82.5/65.8 F
Sensible coil load:	5.6 MBH	Entering DB / WB:	75.5/62.1 F
Coil airflow:	262 CFM	Leaving DB / WB:	55.5/54.2 F
Sensible heat ratio:	0.951	Coil ADP:	53.3 F
Area per unit load:	365.9 sqft/Ton	Bypass Factor:	0.100
Load per unit area:	32.8 BTU/(hr-sqft)	Resulting RH:	47 %
		Design supply temp:	55.0 F

Central Heating Coil Sizing Data

Max coil load:	1.8 MBH	Load occurs at:	Des Htg
Coil airflow:	262 CFM	Ent DB / Lvg DB:	67.9/74.5 F
Load per unit area:	10.2 BTU/(hr-sqft)		

Supply Fan Sizing Data

Actual max airflow:	262 CFM	Fan motor BHP:	0.02 BHP
Standard airflow:	258 CFM	Fan motor kW:	0.02 kW
Actual max airflow per unit area:	1.47 CFM/sqft	Fan static:	0.30 in wg

Outdoor Ventilation Air Data

Design airflow:	10 CFM	Airflow per person:	5.00 CFM/person
Airflow per unit floor area:	0.06 CFM/sqft		

Space Sizing Data

Space Name	Maximum Cooling Sensible MBH	Design Airflow CFM	Time of Peak Load	Maximum Heating Load MBH	Space Floor Area sqft	Space CFM/sqft
COO 303C	3.5	164	Oct 1300	0.9	102.0	1.61
Office 303B	2.1	98	Oct 1300	0.6	77.0	1.28
Zone	**5.6**	**262**	**Oct 1300**	**1.5**	**179.0**	**1.47**

Note: Table contains data for all spaces controlled by a single thermostat:
Space sizing basis: **Peak space load**
Zone sizing basis: **Peak zone load**

Air System Sizing Summary for VFC-3-02

Project Name: Barnbie Point
Prepared by: Holaday-Parks
05/28/2025
02:01PM

Air System Information

Air System Name:	VFC-3-02	Number of zones:	1
Air System Type:	Single Zone CAV	Floor Area:	245.0 sqft
		Location:	Seattle IAP, Washington

Sizing Calculation Information

Calculation Months:	Jan to Dec	Calculation method:	Radiant Time Series

Central Cooling Coil Sizing Data

Total coil load:	0.9 Tons	Load occurs at:	Sep 1500
Total coil load:	10.6 MBH	OA DB / WB:	83.0/66.0 F
Sensible coil load:	9.7 MBH	Entering DB / WB:	75.8/62.4 F
Coil airflow:	450 CFM	Leaving DB / WB:	55.4/54.1 F
Sensible heat ratio:	0.915	Coil ADP:	53.1 F
Area per unit load:	276.5 sqft/Ton	Bypass Factor:	0.100
Load per unit area:	43.4 BTU/(hr-sqft)	Resulting RH:	48 %
		Design supply temp:	55.0 F

Central Heating Coil Sizing Data

Max coil load:	3.9 MBH	Load occurs at:	Des Htg
Coil airflow:	450 CFM	Ent DB / Lvg DB:	68.0/76.2 F
Load per unit area:	16.1 BTU/(hr-sqft)		

Supply Fan Sizing Data

Actual max airflow:	450 CFM	Fan motor BHP:	0.04 BHP
Standard airflow:	442 CFM	Fan motor kW:	0.03 kW
Actual max airflow per unit area:	1.83 CFM/sqft	Fan static:	0.30 in wg

Outdoor Ventilation Air Data

Design airflow:	20 CFM	Airflow per person:	5.00 CFM/person
Airflow per unit floor area:	0.08 CFM/sqft		

Space Sizing Data

Space Name	Maximum Cooling Sensible MBH	Design Airflow CFM	Time of Peak Load	Maximum Heating Load MBH	Space Floor Area sqft	Space CFM/sqft
DEV/COMM	9.6	450	Sep 1500	3.0	245.0	1.83

Air System Sizing Summary for VFC-3-03

Project Name: Barnbie Point
Prepared by: Holaday-Parks
05/28/2025
02:01PM

Air System Information

Air System Name:	VFC-3-03	Number of zones:	1
Air System Type:	Single Zone CAV	Floor Area:	316.0 sqft
		Location:	Seattle IAP, Washington

Sizing Calculation Information

Calculation Months:	Jan to Dec	Calculation method:	Radiant Time Series

Central Cooling Coil Sizing Data

Total coil load:	1.0 Tons	Load occurs at:	Jul 1700
Total coil load:	12.1 MBH	OA DB / WB:	83.2/66.4 F
Sensible coil load:	11.0 MBH	Entering DB / WB:	75.7/62.5 F
Coil airflow:	506 CFM	Leaving DB / WB:	55.3/54.1 F
Sensible heat ratio:	0.905	Coil ADP:	53.0 F
Area per unit load:	312.6 sqft/Ton	Bypass Factor:	0.100
Load per unit area:	38.4 BTU/(hr-sqft)	Resulting RH:	48 %
		Design supply temp:	55.0 F

Central Heating Coil Sizing Data

Max coil load:	5.0 MBH	Load occurs at:	Des Htg
Coil airflow:	506 CFM	Ent DB / Lvg DB:	67.7/77.0 F
Load per unit area:	15.8 BTU/(hr-sqft)		

Supply Fan Sizing Data

Actual max airflow:	506 CFM	Fan motor BHP:	0.04 BHP
Standard airflow:	498 CFM	Fan motor kW:	0.03 kW
Actual max airflow per unit area:	1.60 CFM/sqft	Fan static:	0.30 in wg

Outdoor Ventilation Air Data

Design airflow:	25 CFM	Airflow per person:	5.00 CFM/person
Airflow per unit floor area:	0.08 CFM/sqft		

Space Sizing Data

Space Name	Maximum Cooling Sensible MBH	Design Airflow CFM	Time of Peak Load	Maximum Heating Load MBH	Space Floor Area sqft	Space CFM/sqft
Program Office 303E	10.8	506	Jun 1700	3.8	316.0	1.60

Air System Sizing Summary for VFC-3-04

Project Name: Barnbie Point
Prepared by: Holaday-Parks
05/28/2025
02:01PM

Air System Information

Air System Name:	VFC-3-04	Number of zones:	1
Air System Type:	Single Zone CAV	Floor Area:	176.0 sqft
		Location:	Seattle IAP, Washington

Sizing Calculation Information

Calculation Months:	Jan to Dec	Calculation method:	Radiant Time Series

Central Cooling Coil Sizing Data

Total coil load:	0.4 Tons	Load occurs at:	Jul 1400
Total coil load:	4.5 MBH	OA DB / WB:	84.5/66.8 F
Sensible coil load:	3.8 MBH	Entering DB / WB:	76.2/63.2 F
Coil airflow:	173 CFM	Leaving DB / WB:	55.4/54.1 F
Sensible heat ratio:	0.852	Coil ADP:	53.0 F
Area per unit load:	469.3 sqft/Ton	Bypass Factor:	0.100
Load per unit area:	25.6 BTU/(hr-sqft)	Resulting RH:	50 %
		Design supply temp:	55.0 F

Central Heating Coil Sizing Data

Max coil load:	2.5 MBH	Load occurs at:	Des Htg
Coil airflow:	173 CFM	Ent DB / Lvg DB:	65.7/79.4 F
Load per unit area:	14.4 BTU/(hr-sqft)		

Supply Fan Sizing Data

Actual max airflow:	173 CFM	Fan motor BHP:	0.02 BHP
Standard airflow:	171 CFM	Fan motor kW:	0.01 kW
Actual max airflow per unit area:	0.98 CFM/sqft	Fan static:	0.30 in wg

Outdoor Ventilation Air Data

Design airflow:	15 CFM	Airflow per person:	5.00 CFM/person
Airflow per unit floor area:	0.09 CFM/sqft		

Space Sizing Data

Space Name	Maximum Cooling Sensible MBH	Design Airflow CFM	Time of Peak Load	Maximum Heating Load MBH	Space Floor Area sqft	Space CFM/sqft
Exec Office 303F	3.7	173	Jun 1400	1.9	176.0	0.98

Air System Sizing Summary for VFC-3-05

Project Name: Barnbie Point
Prepared by: Holaday-Parks
05/28/2025
02:01PM

Air System Information

Air System Name:	VFC-3-05	Number of zones:	1
Air System Type:	Single Zone CAV	Floor Area:	350.0 sqft
		Location:	Seattle IAP, Washington

Sizing Calculation Information

Calculation Months:	Jan to Dec	Calculation method:	Radiant Time Series

Central Cooling Coil Sizing Data

Total coil load:	0.4 Tons	Load occurs at:	Jul 1600
Total coil load:	5.0 MBH	OA DB / WB:	84.5/66.8 F
Sensible coil load:	4.4 MBH	Entering DB / WB:	76.1/63.0 F
Coil airflow:	198 CFM	Leaving DB / WB:	55.3/54.1 F
Sensible heat ratio:	0.866	Coil ADP:	53.0 F
Area per unit load:	832.8 sqft/Ton	Bypass Factor:	0.100
Load per unit area:	14.4 BTU/(hr-sqft)	Resulting RH:	50 %
		Design supply temp:	55.0 F

Central Heating Coil Sizing Data

Max coil load:	1.2 MBH	Load occurs at:	Des Htg
Coil airflow:	198 CFM	Ent DB / Lvg DB:	66.5/72.2 F
Load per unit area:	3.5 BTU/(hr-sqft)		

Supply Fan Sizing Data

Actual max airflow:	198 CFM	Fan motor BHP:	0.02 BHP
Standard airflow:	195 CFM	Fan motor kW:	0.01 kW
Actual max airflow per unit area:	0.57 CFM/sqft	Fan static:	0.30 in wg

Outdoor Ventilation Air Data

Design airflow:	15 CFM	Airflow per person:	5.00 CFM/person
Airflow per unit floor area:	0.04 CFM/sqft		

Space Sizing Data

Space Name	Maximum Cooling Sensible MBH	Design Airflow CFM	Time of Peak Load	Maximum Heating Load MBH	Space Floor Area sqft	Space CFM/sqft
Camp Schechter 303	4.2	198	Jun 1500	0.4	350.0	0.57

HOLADAY-PARKS, INC.
SMART Mechanical Solutions©
Mechanical Solutions • Energy Services
Building Controls • Service & Maintenance
4600 S. 134TH PLACE
TUKWILA, WA 98168 • (206) 248-9700
HOLADAYPARKS.com
WA LICENSE NUMBER: HOLADPI379N0

MAXWELL GREENSTREET — STATE OF WASHINGTON — 52096 — REGISTERED PROFESSIONAL ENGINEER
12/15/2025

APPROVED FOR CONSTRUCTION

3700 E MERCER WAY
BARNABIE POINT

NO.	DATE	DESCRIPTION
3	12/15/25	100% CONSTRUCTION DOCS
2	08/25/25	90% CONSTRUCTION DOCS
1	06/04/25	BUILDING PERMIT

4 JUNE 2025
BUILDING PERMIT

PROJECT: 64605

LOAD CALCULATIONS

M0.07

ORIGINAL SHEET SIZE: 24" X 36"

ALL RIGHTS RESERVED: THESE DRAWINGS BELONG IN ANY FORM TO HOLADAY-PARKS, INC. NO PART OF THIS DOCUMENT MAY BE REPRODUCED IN ANY FORM OR BY ANY MEANS WITHOUT PERMISSION IN WRITING FROM HOLADAY PARKS, INC.

Air System Sizing Summary for VFC-3-06

Project Name: Barnbie Point
Prepared by: Holaday-Parks
05/28/2025
02:01PM

Air System Information
Air System Name: VFC-3-06
Air System Type: Single Zone CAV
Number of zones: 1
Floor Area: 122.0 sqft
Location: Seattle IAP, Washington

Sizing Calculation Information
Calculation Months: Jan to Dec
Calculation method: Radiant Time Series

Central Cooling Coil Sizing Data
Total coil load: 0.2 Tons
Total coil load: 2.3 MBH
Sensible coil load: 2.1 MBH
Coil airflow: 95 CFM
Sensible heat ratio: 0.898
Area per unit load: 634.8 sqft/Ton
Load per unit area: 18.9 BTU/(hr-sqft)
Load occurs at: Jun 1500
OA DB / WB: 84.0/67.0 F
Entering DB / WB: 75.9/62.6 F
Leaving DB / WB: 55.4/54.1 F
Coil ADP: 53.1 F
Bypass Factor: 0.100
Resulting RH: 48 %
Design supply temp: 55.0 F

Central Heating Coil Sizing Data
Max coil load: 1.2 MBH
Coil airflow: 95 CFM
Load per unit area: 10.1 BTU/(hr-sqft)
Load occurs at: Des Htg
Ent DB / Lvg DB: 67.5/79.7 F

Supply Fan Sizing Data
Actual max airflow: 95 CFM
Standard airflow: 94 CFM
Actual max airflow per unit area: 0.78 CFM/sqft
Fan motor BHP: 0.01 BHP
Fan motor kW: 0.01 kW
Fan static: 0.30 in wg

Outdoor Ventilation Air Data
Design airflow: 5 CFM
Airflow per unit floor area: 0.04 CFM/sqft
Airflow per person: 5.00 CFM/person

Space Sizing Data

Space Name	Maximum Cooling Sensible MBH	Design Airflow CFM	Time of Peak Load	Maximum Heating Load MBH	Space Floor Area sqft	Space CFM/sqft
Rental Office 302	2.0	95	Jun 1400	1.0	122.0	0.78

Air System Sizing Summary for VFC-3-07

Project Name: Barnbie Point
Prepared by: Holaday-Parks
05/28/2025
02:01PM

Air System Information
Air System Name: VFC-3-07
Air System Type: Single Zone CAV
Number of zones: 1
Floor Area: 598.0 sqft
Location: Seattle IAP, Washington

Sizing Calculation Information
Calculation Months: Jan to Dec
Calculation method: Radiant Time Series

Central Cooling Coil Sizing Data
Total coil load: 1.7 Tons
Total coil load: 20.5 MBH
Sensible coil load: 19.2 MBH
Coil airflow: 890 CFM
Sensible heat ratio: 0.937
Area per unit load: 350.5 sqft/Ton
Load per unit area: 34.2 BTU/(hr-sqft)
Load occurs at: Oct 1300
OA DB / WB: 77.6/63.3 F
Entering DB / WB: 75.3/61.9 F
Leaving DB / WB: 55.0/53.7 F
Coil ADP: 52.8 F
Bypass Factor: 0.100
Resulting RH: 47 %
Design supply temp: 55.0 F

Central Heating Coil Sizing Data
Max coil load: 6.2 MBH
Coil airflow: 890 CFM
Load per unit area: 10.4 BTU/(hr-sqft)
Load occurs at: Des Htg
Ent DB / Lvg DB: 68.3/74.9 F

Supply Fan Sizing Data
Actual max airflow: 890 CFM
Standard airflow: 876 CFM
Actual max airflow per unit area: 1.49 CFM/sqft
Fan motor BHP: 0.08 BHP
Fan motor kW: 0.06 kW
Fan static: 0.30 in wg

Outdoor Ventilation Air Data
Design airflow: 30 CFM
Airflow per unit floor area: 0.05 CFM/sqft
Airflow per person: 5.00 CFM/person

Space Sizing Data

Space Name	Maximum Cooling Sensible MBH	Design Airflow CFM	Time of Peak Load	Maximum Heating Load MBH	Space Floor Area sqft	Space CFM/sqft
Rental 302	18.9	890	Oct 1300	5.0	598.0	1.49

Air System Sizing Summary for VFC-3-08

Project Name: Barnbie Point
Prepared by: Holaday-Parks
05/28/2025
02:01PM

Air System Information
Air System Name: VFC-3-08
Air System Type: Single Zone CAV
Number of zones: 1
Floor Area: 240.0 sqft
Location: Seattle IAP, Washington

Sizing Calculation Information
Calculation Months: Jan to Dec
Calculation method: Radiant Time Series

Central Cooling Coil Sizing Data
Total coil load: 0.4 Tons
Total coil load: 4.4 MBH
Sensible coil load: 3.6 MBH
Coil airflow: 158 CFM
Sensible heat ratio: 0.808
Area per unit load: 648.3 sqft/Ton
Load per unit area: 18.5 BTU/(hr-sqft)
Load occurs at: Jul 1500
OA DB / WB: 85.0/67.0 F
Entering DB / WB: 76.7/63.8 F
Leaving DB / WB: 55.3/54.1 F
Coil ADP: 52.9 F
Bypass Factor: 0.100
Resulting RH: 52 %
Design supply temp: 55.0 F

Central Heating Coil Sizing Data
Max coil load: 1.3 MBH
Coil airflow: 158 CFM
Load per unit area: 5.2 BTU/(hr-sqft)
Load occurs at: Des Htg
Ent DB / Lvg DB: 64.1/71.6 F

Supply Fan Sizing Data
Actual max airflow: 158 CFM
Standard airflow: 156 CFM
Actual max airflow per unit area: 0.66 CFM/sqft
Fan motor BHP: 0.01 BHP
Fan motor kW: 0.01 kW
Fan static: 0.30 in wg

Outdoor Ventilation Air Data
Design airflow: 20 CFM
Airflow per unit floor area: 0.08 CFM/sqft
Airflow per person: 5.00 CFM/person

Space Sizing Data

Space Name	Maximum Cooling Sensible MBH	Design Airflow CFM	Time of Peak Load	Maximum Heating Load MBH	Space Floor Area sqft	Space CFM/sqft
Office 302A/B/C	3.4	158	Jun 1500	0.3	240.0	0.66

Air System Sizing Summary for VFC-3-09

Project Name: Barnbie Point
Prepared by: Holaday-Parks
05/28/2025
02:01PM

Air System Information
Air System Name: VFC-3-09
Air System Type: Single Zone CAV
Number of zones: 1
Floor Area: 376.0 sqft
Location: Seattle IAP, Washington

Sizing Calculation Information
Calculation Months: Jan to Dec
Calculation method: Radiant Time Series

Central Cooling Coil Sizing Data
Total coil load: 1.6 Tons
Total coil load: 18.6 MBH
Sensible coil load: 14.0 MBH
Coil airflow: 616 CFM
Sensible heat ratio: 0.753
Area per unit load: 242.5 sqft/Ton
Load per unit area: 49.5 BTU/(hr-sqft)
Load occurs at: Sep 1400
OA DB / WB: 82.5/65.8 F
Entering DB / WB: 76.8/64.7 F
Leaving DB / WB: 55.4/54.3 F
Coil ADP: 53.0 F
Bypass Factor: 0.100
Resulting RH: 55 %
Design supply temp: 55.0 F

Central Heating Coil Sizing Data
Max coil load: 7.8 MBH
Coil airflow: 616 CFM
Load per unit area: 20.9 BTU/(hr-sqft)
Load occurs at: Des Htg
Ent DB / Lvg DB: 60.9/72.9 F

Supply Fan Sizing Data
Actual max airflow: 616 CFM
Standard airflow: 606 CFM
Actual max airflow per unit area: 1.64 CFM/sqft
Fan motor BHP: 0.05 BHP
Fan motor kW: 0.04 kW
Fan static: 0.30 in wg

Outdoor Ventilation Air Data
Design airflow: 120 CFM
Airflow per unit floor area: 0.32 CFM/sqft
Airflow per person: 5.00 CFM/person

Space Sizing Data

Space Name	Maximum Cooling Sensible MBH	Design Airflow CFM	Time of Peak Load	Maximum Heating Load MBH	Space Floor Area sqft	Space CFM/sqft
Game/Tech 301G	13.1	616	Oct 1300	1.9	376.0	1.64

Air System Sizing Summary for VFC-3-10

Project Name: Barnbie Point
Prepared by: Holaday-Parks
05/28/2025
02:01PM

Air System Information
Air System Name: VFC-3-10
Air System Type: Single Zone CAV
Number of zones: 1
Floor Area: 388.0 sqft
Location: Seattle IAP, Washington

Sizing Calculation Information
Calculation Months: Jan to Dec
Calculation method: Radiant Time Series

Central Cooling Coil Sizing Data
Total coil load: 1.1 Tons
Total coil load: 13.5 MBH
Sensible coil load: 10.4 MBH
Coil airflow: 467 CFM
Sensible heat ratio: 0.770
Area per unit load: 343.7 sqft/Ton
Load per unit area: 34.9 BTU/(hr-sqft)
Load occurs at: Sep 1400
OA DB / WB: 82.5/65.8 F
Entering DB / WB: 76.7/64.5 F
Leaving DB / WB: 55.7/54.5 F
Coil ADP: 53.3 F
Bypass Factor: 0.100
Resulting RH: 55 %
Design supply temp: 55.0 F

Central Heating Coil Sizing Data
Max coil load: 6.1 MBH
Coil airflow: 467 CFM
Load per unit area: 15.6 BTU/(hr-sqft)
Load occurs at: Des Htg
Ent DB / Lvg DB: 62.1/74.3 F

Supply Fan Sizing Data
Actual max airflow: 467 CFM
Standard airflow: 459 CFM
Actual max airflow per unit area: 1.20 CFM/sqft
Fan motor BHP: 0.04 BHP
Fan motor kW: 0.03 kW
Fan static: 0.30 in wg

Outdoor Ventilation Air Data
Design airflow: 80 CFM
Airflow per unit floor area: 0.21 CFM/sqft
Airflow per person: 5.00 CFM/person

Space Sizing Data

Space Name	Maximum Cooling Sensible MBH	Design Airflow CFM	Time of Peak Load	Maximum Heating Load MBH	Space Floor Area sqft	Space CFM/sqft
Music 301F	9.9	467	Oct 1300	1.9	388.0	1.20

Air System Sizing Summary for VFC-3-11

Project Name: Barnbie Point
Prepared by: Holaday-Parks
05/28/2025
02:01PM

Air System Information
Air System Name: VFC-3-11
Air System Type: Single Zone CAV
Number of zones: 1
Floor Area: 912.0 sqft
Location: Seattle IAP, Washington

Sizing Calculation Information
Calculation Months: Jan to Dec
Calculation method: Radiant Time Series

Central Cooling Coil Sizing Data
Total coil load: 3.6 Tons
Total coil load: 42.9 MBH
Sensible coil load: 32.5 MBH
Coil airflow: 1333 CFM
Sensible heat ratio: 0.758
Area per unit load: 255.0 sqft/Ton
Load per unit area: 47.1 BTU/(hr-sqft)
Load occurs at: Aug 1500
OA DB / WB: 85.0/67.0 F
Entering DB / WB: 78.4/65.2 F
Leaving DB / WB: 55.4/54.2 F
Coil ADP: 52.9 F
Bypass Factor: 0.100
Resulting RH: 56 %
Design supply temp: 55.0 F

Central Heating Coil Sizing Data
Max coil load: 26.6 MBH
Coil airflow: 1333 CFM
Load per unit area: 29.2 BTU/(hr-sqft)
Load occurs at: Des Htg
Ent DB / Lvg DB: 54.6/73.4 F

Supply Fan Sizing Data
Actual max airflow: 1333 CFM
Standard airflow: 1311 CFM
Actual max airflow per unit area: 1.46 CFM/sqft
Fan motor BHP: 0.12 BHP
Fan motor kW: 0.09 kW
Fan static: 0.30 in wg

Outdoor Ventilation Air Data
Design airflow: 432 CFM
Airflow per unit floor area: 0.47 CFM/sqft
Airflow per person: 8.00 CFM/person

Space Sizing Data

Space Name	Maximum Cooling Sensible MBH	Design Airflow CFM	Time of Peak Load	Maximum Heating Load MBH	Space Floor Area sqft	Space CFM/sqft
Art/Stem/Open Office	28.3	1333	Sep 1300	5.6	912.0	1.46

Air System Sizing Summary for VFC-3-12

Project Name: Barnbie Point
Prepared by: Holaday-Parks
05/28/2025
02:01PM

Air System Information
Air System Name: VFC-3-12
Air System Type: Single Zone CAV
Number of zones: 1
Floor Area: 168.0 sqft
Location: Seattle IAP, Washington

Sizing Calculation Information
Calculation Months: Jan to Dec
Calculation method: Radiant Time Series

Central Cooling Coil Sizing Data
Total coil load: 0.5 Tons
Total coil load: 5.7 MBH
Sensible coil load: 5.2 MBH
Coil airflow: 243 CFM
Sensible heat ratio: 0.920
Area per unit load: 355.2 sqft/Ton
Load per unit area: 33.8 BTU/(hr-sqft)
Load occurs at: Sep 1300
OA DB / WB: 81.0/65.3 F
Entering DB / WB: 75.5/62.3 F
Leaving DB / WB: 55.3/54.1 F
Coil ADP: 53.1 F
Bypass Factor: 0.100
Resulting RH: 48 %
Design supply temp: 55.0 F

Central Heating Coil Sizing Data
Max coil load: 1.9 MBH
Coil airflow: 243 CFM
Load per unit area: 11.1 BTU/(hr-sqft)
Load occurs at: Des Htg
Ent DB / Lvg DB: 68.2/75.4 F

Supply Fan Sizing Data
Actual max airflow: 243 CFM
Standard airflow: 239 CFM
Actual max airflow per unit area: 1.45 CFM/sqft
Fan motor BHP: 0.02 BHP
Fan motor kW: 0.02 kW
Fan static: 0.30 in wg

Outdoor Ventilation Air Data
Design airflow: 10 CFM
Airflow per unit floor area: 0.06 CFM/sqft
Airflow per person: 5.00 CFM/person

Space Sizing Data

Space Name	Maximum Cooling Sensible MBH	Design Airflow CFM	Time of Peak Load	Maximum Heating Load MBH	Space Floor Area sqft	Space CFM/sqft
Snoezelen 301E	5.2	243	Oct 1300	1.4	168.0	1.45

Air System Sizing Summary for VFC-3-13

Project Name: Barnbie Point
Prepared by: Holaday-Parks
05/28/2025
02:01PM

Air System Information
Air System Name: VFC-3-13
Air System Type: Single Zone CAV
Number of zones: 1
Floor Area: 1159.0 sqft
Location: Seattle IAP, Washington

Sizing Calculation Information
Calculation Months: Jan to Dec
Calculation method: Radiant Time Series

Central Cooling Coil Sizing Data
Total coil load: 1.6 Tons
Total coil load: 19.7 MBH
Sensible coil load: 17.9 MBH
Coil airflow: 823 CFM
Sensible heat ratio: 0.905
Area per unit load: 704.4 sqft/Ton
Load per unit area: 17.0 BTU/(hr-sqft)
Load occurs at: Jun 1500
OA DB / WB: 84.0/67.0 F
Entering DB / WB: 75.8/62.6 F
Leaving DB / WB: 55.4/54.2 F
Coil ADP: 53.1 F
Bypass Factor: 0.100
Resulting RH: 48 %
Design supply temp: 55.0 F

Central Heating Coil Sizing Data
Max coil load: 9.3 MBH
Coil airflow: 823 CFM
Load per unit area: 8.0 BTU/(hr-sqft)
Load occurs at: Des Htg
Ent DB / Lvg DB: 67.7/78.3 F

Supply Fan Sizing Data
Actual max airflow: 823 CFM
Standard airflow: 809 CFM
Actual max airflow per unit area: 0.71 CFM/sqft
Fan motor BHP: 0.07 BHP
Fan motor kW: 0.05 kW
Fan static: 0.30 in wg

Outdoor Ventilation Air Data
Design airflow: 40 CFM
Airflow per unit floor area: 0.03 CFM/sqft
Airflow per person: 5.00 CFM/person

Space Sizing Data

Space Name	Maximum Cooling Sensible MBH	Design Airflow CFM	Time of Peak Load	Maximum Heating Load MBH	Space Floor Area sqft	Space CFM/sqft
Office 301A	2.0	93	Jun 1400	1.0	119.0	0.79
Office 301B	2.0	93	Jun 1400	1.0	119.0	0.79
Office Left	5.2	245	Jun 1400	1.2	345.0	0.71
Office Right	8.3	391	Jun 1400	4.2	576.0	0.68
Zone	**17.5**	**823**	**Jun 1400**	**7.3**	**1159.0**	**0.71**

Note: Table contains data for all spaces controlled by a single thermostat:
Space sizing basis: Peak space load
Zone sizing basis: Peak zone load

Air System Sizing Summary for VFC-3-14

Project Name: Barnbie Point
Prepared by: Holaday-Parks
05/28/2025
02:01PM

Air System Information
Air System Name: VFC-3-14
Air System Type: Single Zone CAV
Number of zones: 1
Floor Area: 1008.0 sqft
Location: Seattle IAP, Washington

Sizing Calculation Information
Calculation Months: Jan to Dec
Calculation method: Radiant Time Series

Central Cooling Coil Sizing Data
Total coil load: 1.3 Tons
Total coil load: 15.9 MBH
Sensible coil load: 13.6 MBH
Coil airflow: 619 CFM
Sensible heat ratio: 0.856
Area per unit load: 762.9 sqft/Ton
Load per unit area: 15.7 BTU/(hr-sqft)
Load occurs at: Jun 1400
OA DB / WB: 83.5/66.8 F
Entering DB / WB: 76.1/63.1 F
Leaving DB / WB: 55.4/54.2 F
Coil ADP: 53.1 F
Bypass Factor: 0.100
Resulting RH: 50 %
Design supply temp: 55.0 F

Central Heating Coil Sizing Data
Max coil load: 9.7 MBH
Coil airflow: 619 CFM
Load per unit area: 9.6 BTU/(hr-sqft)
Load occurs at: Des Htg
Ent DB / Lvg DB: 66.1/80.8 F

Supply Fan Sizing Data
Actual max airflow: 619 CFM
Standard airflow: 609 CFM
Actual max airflow per unit area: 0.61 CFM/sqft
Fan motor BHP: 0.05 BHP
Fan motor kW: 0.04 kW
Fan static: 0.30 in wg

Outdoor Ventilation Air Data
Design airflow: 50 CFM
Airflow per unit floor area: 0.05 CFM/sqft
Airflow per person: 5.00 CFM/person

Space Sizing Data

Space Name	Maximum Cooling Sensible MBH	Design Airflow CFM	Time of Peak Load	Maximum Heating Load MBH	Space Floor Area sqft	Space CFM/sqft
Circ 300	13.1	619	Jun 1400	7.4	1008.0	0.61

HOLADAY-PARKS, INC.
SMART Mechanical Solutions©
Mechanical Solutions • Energy Services
Building Controls • Service & Maintenance
4600 S. 134TH PLACE
TUKWILA, WA 98168 • (206) 248-9700
HOLADAYPARKS.com
WA LICENSE NUMBER: HOLADPI379N0

MAXWELL GREENSTREET — STATE OF WASHINGTON — 52066 — REGISTERED PROFESSIONAL ENGINEER
12/15/2025

APPROVED FOR CONSTRUCTION

3700 E MERCER WAY
BARNABIE POINT

NO.	DATE	DESCRIPTION
3	12/15/25	100% CONSTRUCTION DOCS
2	08/25/25	90% CONSTRUCTION DOCS
1	06/04/25	BUILDING PERMIT

4 JUNE 2025
BUILDING PERMIT

PROJECT: 64605

LOAD CALCULATIONS

M0.08

ORIGINAL SHEET SIZE: 24" X 36"

ALL RIGHTS RESERVED: THESE DRAWINGS BELONG IN ANY FORM TO HOLADAY-PARKS, INC. NO PART OF THIS DOCUMENT MAY BE REPRODUCED IN ANY FORM OR BY ANY MEANS WITHOUT PERMISSION IN WRITING FROM HOLADAY PARKS, INC.

Air System Sizing Summary for VFC-3-15

Project Name: Barnbie Point
Prepared by: Holaday-Parks
05/28/2025
02:01PM

Air System Information

Air System Name:	VFC-3-15	Number of zones:	1
Air System Type:	Single Zone CAV	Floor Area:	387.0 sqft
		Location:	Seattle IAP, Washington

Sizing Calculation Information

Calculation Months:	Jan to Dec	Calculation method:	Radiant Time Series

Central Cooling Coil Sizing Data

Total coil load:	1.1 Tons	Load occurs at:	Sep 1300
Total coil load:	13.2 MBH	OA DB / WB:	81.0/65.3 F
Sensible coil load:	11.0 MBH	Entering DB / WB:	75.8/63.2 F
Coil airflow:	507 CFM	Leaving DB / WB:	55.4/54.2 F
Sensible heat ratio:	0.839	Coil ADP:	53.1 F
Area per unit load:	353.1 sqft/Ton	Bypass Factor:	0.100
Load per unit area:	34.0 BTU/(hr-sqft)	Resulting RH:	51 %
		Design supply temp:	55.0 F

Central Heating Coil Sizing Data

Max coil load:	5.1 MBH	Load occurs at:	Des Htg
Coil airflow:	507 CFM	Ent DB / Lvg DB:	65.6/75.0 F
Load per unit area:	13.1 BTU/(hr-sqft)		

Supply Fan Sizing Data

Actual max airflow:	507 CFM	Fan motor BHP:	0.04 BHP
Standard airflow:	499 CFM	Fan motor kW:	0.03 kW
Actual max airflow per unit area:	1.31 CFM/sqft	Fan static:	0.30 in wg

Outdoor Ventilation Air Data

Design airflow:	50 CFM	Airflow per person:	5.00 CFM/person
Airflow per unit floor area:	0.13 CFM/sqft		

Space Sizing Data

Space Name	Maximum Cooling Sensible MBH	Design Airflow CFM	Time of Peak Load	Maximum Heating Load MBH	Space Floor Area sqft	Space CFM/sqft
Conf 303A	10.8	507	Oct 1300	2.6	387.0	1.31

Air System Sizing Summary for VFC-B-1

Project Name: Barnbie Point
Prepared by: Holaday-Parks
05/28/2025
02:01PM

Air System Information

Air System Name:	VFC-B-1	Number of zones:	1
Air System Type:	Single Zone CAV	Floor Area:	450.0 sqft
		Location:	Seattle IAP, Washington

Sizing Calculation Information

Calculation Months:	Jan to Dec	Calculation method:	Radiant Time Series

Central Cooling Coil Sizing Data

Total coil load:	0.8 Tons	Load occurs at:	Jul 1500
Total coil load:	9.5 MBH	OA DB / WB:	85.0/67.0 F
Sensible coil load:	7.7 MBH	Entering DB / WB:	77.6/64.2 F
Coil airflow:	325 CFM	Leaving DB / WB:	55.3/54.1 F
Sensible heat ratio:	0.810	Coil ADP:	52.9 F
Area per unit load:	569.5 sqft/Ton	Bypass Factor:	0.100
Load per unit area:	21.1 BTU/(hr-sqft)	Resulting RH:	52 %
		Design supply temp:	55.0 F

Central Heating Coil Sizing Data

Max coil load:	3.4 MBH	Load occurs at:	Des Htg
Coil airflow:	325 CFM	Ent DB / Lvg DB:	59.9/69.8 F
Load per unit area:	7.6 BTU/(hr-sqft)		

Supply Fan Sizing Data

Actual max airflow:	325 CFM	Fan motor BHP:	0.03 BHP
Standard airflow:	320 CFM	Fan motor kW:	0.02 kW
Actual max airflow per unit area:	0.72 CFM/sqft	Fan static:	0.30 in wg

Outdoor Ventilation Air Data

Design airflow:	70 CFM	Airflow per person:	5.00 CFM/person
Airflow per unit floor area:	0.16 CFM/sqft		

Space Sizing Data

Space Name	Maximum Cooling Sensible MBH	Design Airflow CFM	Time of Peak Load	Maximum Heating Load MBH	Space Floor Area sqft	Space CFM/sqft
Conference 006	6.9	325	Jan 000	0.0	450.0	0.72

Air System Sizing Summary for VFC-B-2

Project Name: Barnbie Point
Prepared by: Holaday-Parks
05/28/2025
02:01PM

Air System Information

Air System Name:	VFC-B-2	Number of zones:	1
Air System Type:	Single Zone CAV	Floor Area:	290.0 sqft
		Location:	Seattle IAP, Washington

Sizing Calculation Information

Calculation Months:	Jan to Dec	Calculation method:	Radiant Time Series

Central Cooling Coil Sizing Data

Total coil load:	0.8 Tons	Load occurs at:	Jul 1500
Total coil load:	9.1 MBH	OA DB / WB:	85.0/67.0 F
Sensible coil load:	7.4 MBH	Entering DB / WB:	77.7/64.3 F
Coil airflow:	310 CFM	Leaving DB / WB:	55.4/54.2 F
Sensible heat ratio:	0.805	Coil ADP:	52.9 F
Area per unit load:	381.2 sqft/Ton	Bypass Factor:	0.100
Load per unit area:	31.5 BTU/(hr-sqft)	Resulting RH:	52 %
		Design supply temp:	55.0 F

Central Heating Coil Sizing Data

Max coil load:	3.4 MBH	Load occurs at:	Des Htg
Coil airflow:	310 CFM	Ent DB / Lvg DB:	59.4/69.8 F
Load per unit area:	11.8 BTU/(hr-sqft)		

Supply Fan Sizing Data

Actual max airflow:	310 CFM	Fan motor BHP:	0.03 BHP
Standard airflow:	305 CFM	Fan motor kW:	0.02 kW
Actual max airflow per unit area:	1.07 CFM/sqft	Fan static:	0.30 in wg

Outdoor Ventilation Air Data

Design airflow:	70 CFM	Airflow per person:	5.00 CFM/person
Airflow per unit floor area:	0.24 CFM/sqft		

Space Sizing Data

Space Name	Maximum Cooling Sensible MBH	Design Airflow CFM	Time of Peak Load	Maximum Heating Load MBH	Space Floor Area sqft	Space CFM/sqft
Workroom 005	6.6	310	Jan 000	0.0	290.0	1.07

Air System Sizing Summary for VFC-B-3

Project Name: Barnbie Point
Prepared by: Holaday-Parks
05/28/2025
02:01PM

Air System Information

Air System Name:	VFC-B-3	Number of zones:	1
Air System Type:	Single Zone CAV	Floor Area:	635.0 sqft
		Location:	Seattle IAP, Washington

Sizing Calculation Information

Calculation Months:	Jan to Dec	Calculation method:	Radiant Time Series

Central Cooling Coil Sizing Data

Total coil load:	0.6 Tons	Load occurs at:	Jun 1500
Total coil load:	7.0 MBH	OA DB / WB:	84.0/67.0 F
Sensible coil load:	6.4 MBH	Entering DB / WB:	76.1/62.5 F
Coil airflow:	288 CFM	Leaving DB / WB:	55.3/54.0 F
Sensible heat ratio:	0.912	Coil ADP:	53.0 F
Area per unit load:	1092.3 sqft/Ton	Bypass Factor:	0.100
Load per unit area:	11.0 BTU/(hr-sqft)	Resulting RH:	48 %
		Design supply temp:	55.0 F

Central Heating Coil Sizing Data

Max coil load:	0.9 MBH	Load occurs at:	Des Htg
Coil airflow:	288 CFM	Ent DB / Lvg DB:	66.7/69.8 F
Load per unit area:	1.5 BTU/(hr-sqft)		

Supply Fan Sizing Data

Actual max airflow:	288 CFM	Fan motor BHP:	0.03 BHP
Standard airflow:	283 CFM	Fan motor kW:	0.02 kW
Actual max airflow per unit area:	0.45 CFM/sqft	Fan static:	0.30 in wg

Outdoor Ventilation Air Data

Design airflow:	20 CFM	Airflow per person:	5.00 CFM/person
Airflow per unit floor area:	0.03 CFM/sqft		

Space Sizing Data

Space Name	Maximum Cooling Sensible MBH	Design Airflow CFM	Time of Peak Load	Maximum Heating Load MBH	Space Floor Area sqft	Space CFM/sqft
Faculty 003	6.1	288	Jan 000	0.0	635.0	0.45

Air System Sizing Summary for VFC-B-4

Project Name: Barnbie Point
Prepared by: Holaday-Parks
05/28/2025
02:01PM

Air System Information

Air System Name:	VFC-B-4	Number of zones:	1
Air System Type:	Single Zone CAV	Floor Area:	826.0 sqft
		Location:	Seattle IAP, Washington

Sizing Calculation Information

Calculation Months:	Jan to Dec	Calculation method:	Radiant Time Series

Central Cooling Coil Sizing Data

Total coil load:	1.3 Tons	Load occurs at:	Jun 1500
Total coil load:	15.2 MBH	OA DB / WB:	84.0/67.0 F
Sensible coil load:	13.0 MBH	Entering DB / WB:	76.5/63.0 F
Coil airflow:	566 CFM	Leaving DB / WB:	54.8/53.5 F
Sensible heat ratio:	0.854	Coil ADP:	52.4 F
Area per unit load:	650.1 sqft/Ton	Bypass Factor:	0.100
Load per unit area:	18.5 BTU/(hr-sqft)	Resulting RH:	49 %
		Design supply temp:	55.0 F

Central Heating Coil Sizing Data

Max coil load:	6.2 MBH	Load occurs at:	Des Htg
Coil airflow:	566 CFM	Ent DB / Lvg DB:	63.7/74.0 F
Load per unit area:	7.5 BTU/(hr-sqft)		

Supply Fan Sizing Data

Actual max airflow:	566 CFM	Fan motor BHP:	0.05 BHP
Standard airflow:	556 CFM	Fan motor kW:	0.04 kW
Actual max airflow per unit area:	0.68 CFM/sqft	Fan static:	0.30 in wg

Outdoor Ventilation Air Data

Design airflow:	75 CFM	Airflow per person:	5.00 CFM/person
Airflow per unit floor area:	0.09 CFM/sqft		

Space Sizing Data

Space Name	Maximum Cooling Sensible MBH	Design Airflow CFM	Time of Peak Load	Maximum Heating Load MBH	Space Floor Area sqft	Space CFM/sqft
Art 003	12.0	566	Jun 1800	2.6	826.0	0.68

Air System Sizing Summary for VFC-B-5

Project Name: Barnbie Point
Prepared by: Holaday-Parks
05/28/2025
02:01PM

Air System Information

Air System Name:	VFC-B-5	Number of zones:	1
Air System Type:	Single Zone CAV	Floor Area:	1386.0 sqft
		Location:	Seattle IAP, Washington

Sizing Calculation Information

Calculation Months:	Jan to Dec	Calculation method:	Radiant Time Series

Central Cooling Coil Sizing Data

Total coil load:	2.1 Tons	Load occurs at:	Jul 1400
Total coil load:	25.1 MBH	OA DB / WB:	84.5/66.8 F
Sensible coil load:	21.5 MBH	Entering DB / WB:	76.5/63.0 F
Coil airflow:	933 CFM	Leaving DB / WB:	54.9/53.6 F
Sensible heat ratio:	0.858	Coil ADP:	52.5 F
Area per unit load:	663.7 sqft/Ton	Bypass Factor:	0.100
Load per unit area:	18.1 BTU/(hr-sqft)	Resulting RH:	49 %
		Design supply temp:	55.0 F

Central Heating Coil Sizing Data

Max coil load:	10.1 MBH	Load occurs at:	Des Htg
Coil airflow:	933 CFM	Ent DB / Lvg DB:	63.7/73.9 F
Load per unit area:	7.3 BTU/(hr-sqft)		

Supply Fan Sizing Data

Actual max airflow:	933 CFM	Fan motor BHP:	0.08 BHP
Standard airflow:	918 CFM	Fan motor kW:	0.06 kW
Actual max airflow per unit area:	0.67 CFM/sqft	Fan static:	0.30 in wg

Outdoor Ventilation Air Data

Design airflow:	125 CFM	Airflow per person:	5.00 CFM/person
Airflow per unit floor area:	0.09 CFM/sqft		

Space Sizing Data

Space Name	Maximum Cooling Sensible MBH	Design Airflow CFM	Time of Peak Load	Maximum Heating Load MBH	Space Floor Area sqft	Space CFM/sqft
Stem/Science	19.8	933	Jun 1800	4.0	1386.0	0.67

Air System Sizing Summary for VFC-B-6

Project Name: Barnbie Point
Prepared by: Holaday-Parks
05/28/2025
02:01PM

Air System Information

Air System Name:	VFC-B-6	Number of zones:	1
Air System Type:	Single Zone CAV	Floor Area:	1038.0 sqft
		Location:	Seattle IAP, Washington

Sizing Calculation Information

Calculation Months:	Jan to Dec	Calculation method:	Radiant Time Series

Central Cooling Coil Sizing Data

Total coil load:	0.6 Tons	Load occurs at:	Jun 1500
Total coil load:	6.7 MBH	OA DB / WB:	84.0/67.0 F
Sensible coil load:	6.1 MBH	Entering DB / WB:	76.1/62.6 F
Coil airflow:	277 CFM	Leaving DB / WB:	55.3/54.0 F
Sensible heat ratio:	0.909	Coil ADP:	53.0 F
Area per unit load:	1850.9 sqft/Ton	Bypass Factor:	0.100
Load per unit area:	6.5 BTU/(hr-sqft)	Resulting RH:	48 %
		Design supply temp:	55.0 F

Central Heating Coil Sizing Data

Max coil load:	0.9 MBH	Load occurs at:	Des Htg
Coil airflow:	277 CFM	Ent DB / Lvg DB:	66.6/69.8 F
Load per unit area:	0.9 BTU/(hr-sqft)		

Supply Fan Sizing Data

Actual max airflow:	277 CFM	Fan motor BHP:	0.02 BHP
Standard airflow:	272 CFM	Fan motor kW:	0.02 kW
Actual max airflow per unit area:	0.27 CFM/sqft	Fan static:	0.30 in wg

Outdoor Ventilation Air Data

Design airflow:	20 CFM	Airflow per person:	5.00 CFM/person
Airflow per unit floor area:	0.02 CFM/sqft		

Space Sizing Data

Space Name	Maximum Cooling Sensible MBH	Design Airflow CFM	Time of Peak Load	Maximum Heating Load MBH	Space Floor Area sqft	Space CFM/sqft
Circ 001	5.9	277	Jan 000	0.0	1038.0	0.27

HOLADAY-PARKS, INC.
SMART Mechanical Solutions©

Mechanical Solutions • Energy Services
Building Controls • Service & Maintenance

4600 S. 134TH PLACE
TUKWILA, WA 98168 • (206) 248-9700

HOLADAYPARKS.com
WA LICENSE NUMBER: HOLADPI379N0

MAXWELL GREENSTREET — STATE OF WASHINGTON — 52266 — REGISTERED PROFESSIONAL ENGINEER

12/15/2025

APPROVED FOR CONSTRUCTION

3700 E MERCER WAY
BARNABIE POINT

NO.	DATE	DESCRIPTION
3	12/15/25	100% CONSTRUCTION DOCS
2	08/25/25	90% CONSTRUCTION DOCS
1	06/04/25	BUILDING PERMIT

4 JUNE 2025

BUILDING PERMIT

PROJECT: 64605

LOAD CALCULATIONS

M0.09

ORIGINAL SHEET SIZE: 24" X 36"

ALL RIGHTS RESERVED: THESE DRAWINGS BELONG IN ANY FORM TO HOLADAY-PARKS, INC. NO PART OF THIS DOCUMENT MAY BE REPRODUCED IN ANY FORM OR BY ANY MEANS WITHOUT PERMISSION IN WRITING FROM HOLADAY PARKS, INC.

KEYED NOTES

1. PROVIDE CAR-II CONSTANT AIRFLOW REGULATOR.
2. PROVIDE 1" UNDERCUT DOOR BY G.C.
3. 10"x6"/SL (<150 CFM) SOUNDLINED ACOUSTICAL BOOT W/TOP OPENING.
4. 16"x8"/SL (155-300 CFM) SOUNDLINED ACOUSTICAL BOOT W/TOP OPENING.
5. HEAT PUMP DRYER PROVIDED BY OWNER.

SHEET NOTES

1. (CO2)(S) INDICATES A COMBINED CO2 AND TEMPERATURE LOCATED IN HIGH OCCUPANCY SPACES EXCEEDING 500 SQFT FLOOR AREA. SENSOR INSTALLED AT AN ELEVATION OF 48" A.F.F.
2. (S) INDICATE TEMPERATURE SENSOR INSTALLED AT AN ELEVATION OF 48" A.F.F.
3. ALL SENSORS INSTALLED ON THE INSIDE FACE OF AN EXTERIOR WALL SHALL BE PROVIDED WITH AN INSULATED BASE PLATE THAT PROVIDES A THERMAL BREAK FROM THE WALL FRAMING. FIELD TO VERIFY THERMAL BREAK IS INSTALLED PRIOR TO CLOSURE OF WALL.

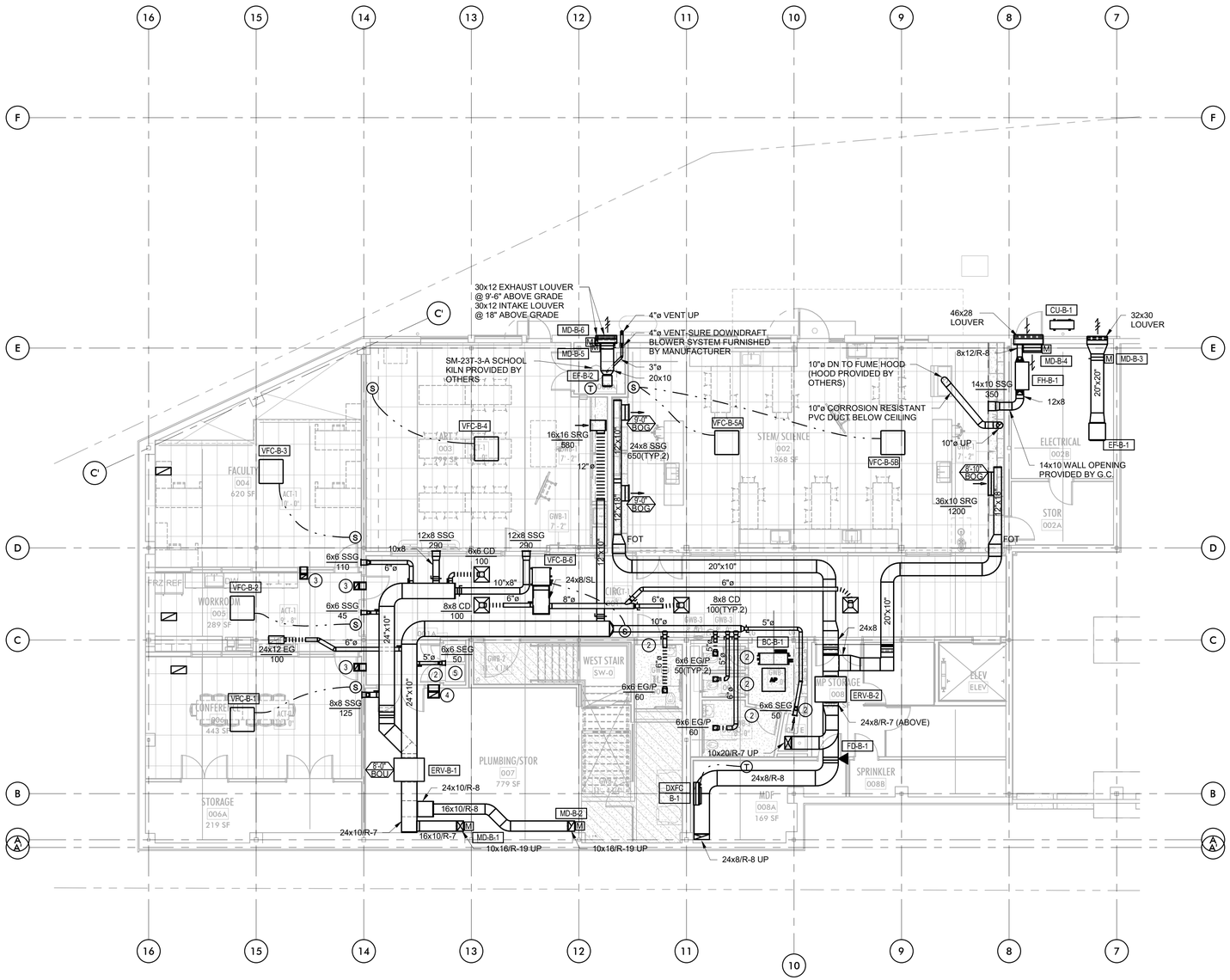

LEVEL B01 HVAC PLAN
Scale: 1/8" = 1'-0"

ORIGINAL SHEET SIZE: 24" X 36"

HOLADAY-PARKS, INC.
SMART Mechanical Solutions ®

Mechanical Solutions • Energy Services
Building Controls • Service & Maintenance
4600 S. 134TH PLACE
TUKWILA, WA 98168 • (206) 248-9700
HOLADAYPARKS.com
WA LICENSE NUMBER: HOLADPI379N0

MAXWELL GREENWALD — STATE OF WASHINGTON — 52266 — REGISTERED PROFESSIONAL ENGINEER
12/15/2025

APPROVED FOR CONSTRUCTION

3700 E MERCER WAY
BARNABIE POINT PROJECT

NO.	DATE	DESCRIPTION
3	12/15/25	100% CONSTRUCTION DOCS
2	08/25/25	90% CONSTRUCTION DOCS
1	06/04/25	BUILDING PERMIT

4 JUNE 2025
BUILDING PERMIT

PROJECT: 64605

LEVEL B01
HVAC PLAN

M2.00

ALL RIGHTS RESERVED. THESE DRAWINGS BELONG IN ANY FORM TO HOLADAY-PARKS, INC. NO PART OF THIS DOCUMENT MAY BE REPRODUCED IN ANY FORM OR BY ANY MEANS WITHOUT PERMISSION IN WRITING FROM HOLADAY PARKS, INC.

KEYED NOTES

1. PROVIDE CAR-II CONSTANT AIRFLOW REGULATOR.
2. PROVIDE 1" UNDERCUT DOOR BY G.C.
3. 10"x6"/SL (<150 CFM) SOUNDLINED ACOUSTICAL BOOT W/TOP OPENING.
4. 16"x8"/SL (155-300 CFM) SOUNDLINED ACOUSTICAL BOOT W/TOP OPENING.
5. PROVIDE R-19 INSULATION BETWEEN EXTERIOR LOUVER AND MOTORIZED DAMPER.
6. PROVIDE PROTECTIVE COVER FOR SENSORS.
7. C.C. TO PROVIDE OCCUPANCY SENSOR TO CLOSE OSA DAMPER WHEN THE SPACE IS UNOCCUPIED.
8. PROVIDE CORROSION RESISTANT PVC DUCT.
9. 24"x8"/SL (305-450 CFM) SOUNDLINED ACOUSTICAL BOOT W/TOP OPENING.

SHEET NOTES

1. (CO2)(S) INDICATES A COMBINED CO2 AND TEMPERATURE LOCATED IN HIGH OCCUPANCY SPACES EXCEEDING 500 SQFT FLOOR AREA. SENSOR INSTALLED AT AN ELEVATION OF 48" A.F.F.
2. (S) INDICATE TEMPERATURE SENSOR INSTALLED AT AN ELEVATION OF 48" A.F.F.
3. ALL SENSORS INSTALLED ON THE INSIDE FACE OF AN EXTERIOR WALL SHALL BE PROVIDED WITH AN INSULATED BASE PLATE THAT PROVIDES A THERMAL BREAK FROM THE WALL FRAMING. FIELD TO VERIFY THERMAL BREAK IS INSTALLED PRIOR TO CLOSURE OF WALL.

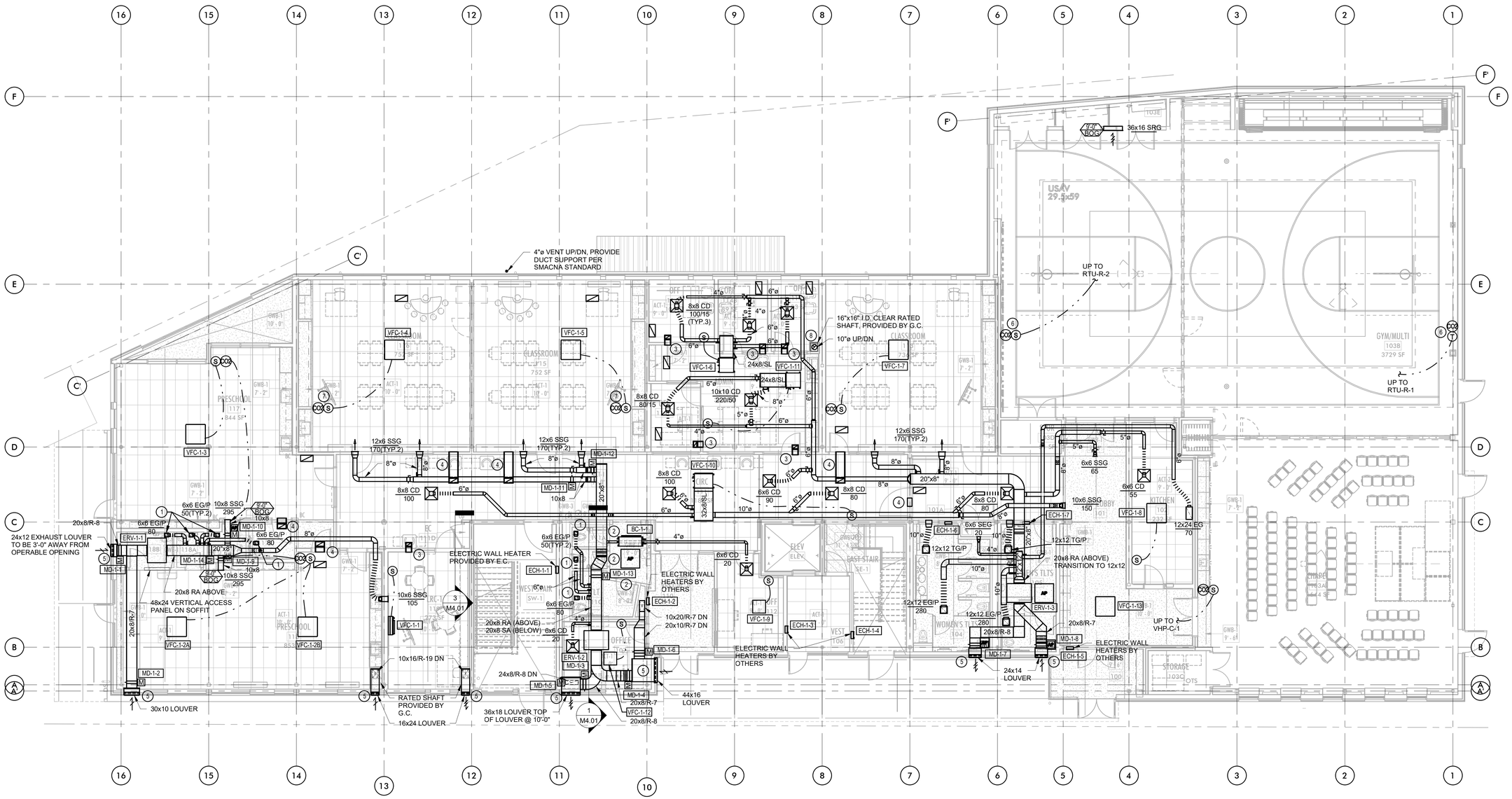

LEVEL 01 HVAC PLAN
Scale: 1/8" = 1'-0"

ORIGINAL SHEET SIZE: 24" X 36"

HOLADAY-PARKS, INC.
SMART Mechanical Solutions ®

Mechanical Solutions • Energy Services
Building Controls • Service & Maintenance

4600 S. 134TH PLACE
TUKWILA, WA 98168 • (206) 248-9700

HOLADAYPARKS.com

WA LICENSE NUMBER: HOLADPI379N0

MAXWELL GREENWALD — STATE OF WASHINGTON — 52266 — REGISTERED PROFESSIONAL ENGINEER

12/15/2025

APPROVED FOR CONSTRUCTION

3700 E MERCER WAY
BARNABIE POINT PROJECT

NO.	DATE	DESCRIPTION
3	12/15/25	100% CONSTRUCTION DOCS
2	08/25/25	90% CONSTRUCTION DOCS
1	06/04/25	BUILDING PERMIT

4 JUNE 2025

BUILDING PERMIT

PROJECT: 64605

LEVEL 01
HVAC PLAN

M2.01

ALL RIGHTS RESERVED. THESE DRAWINGS BELONG IN ANY FORM TO HOLADAY-PARKS, INC. NO PART OF THIS DOCUMENT MAY BE REPRODUCED IN ANY FORM OR BY ANY MEANS WITHOUT PERMISSION IN WRITING FROM HOLADAY PARKS, INC.

KEYED NOTES

1. PROVIDE CAR-II CONSTANT AIRFLOW REGULATOR.
2. PROVIDE 1" UNDERCUT DOOR BY G.C.
3. 10"x6"/SL (<150 CFM) SOUNDLINED ACOUSTICAL BOOT W/TOP OPENING.
4. 16"x8"/SL (155-300 CFM) SOUNDLINED ACOUSTICAL BOOT W/TOP OPENING.
5. PROVIDE R-19 INSULATION BETWEEN EXTERIOR LOUVER AND MOTORIZED DAMPER.
6. PROVIDE CORROSION RESISTANT PVC DUCT.
7. 24"x8"/SL (305-450 CFM) SOUNDLINED ACOUSTICAL BOOT W/TOP OPENING.

SHEET NOTES

1. (CO2)(S) INDICATES A COMBINED CO2 AND TEMPERATURE LOCATED IN HIGH OCCUPANCY SPACES EXCEEDING 500 SQFT FLOOR AREA. SENSOR INSTALLED AT AN ELEVATION OF 48" A.F.F.
2. (S) INDICATE TEMPERATURE SENSOR INSTALLED AT AN ELEVATION OF 48" A.F.F.
3. ALL SENSORS INSTALLED ON THE INSIDE FACE OF AN EXTERIOR WALL SHALL BE PROVIDED WITH AN INSULATED BASE PLATE THAT PROVIDES A THERMAL BREAK FROM THE WALL FRAMING. FIELD TO VERIFY THERMAL BREAK IS INSTALLED PRIOR TO CLOSURE OF WALL.

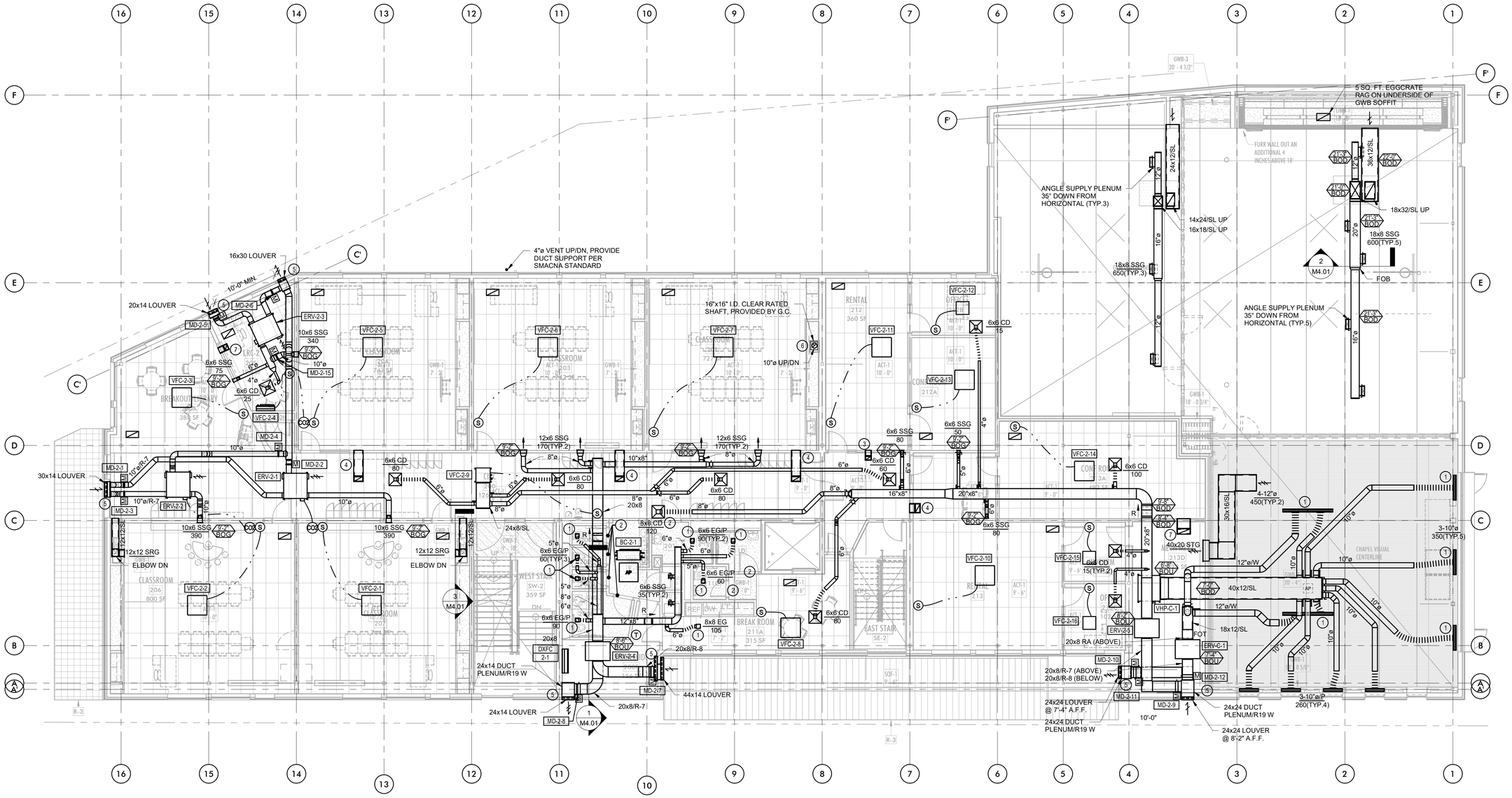

LEVEL 02 HVAC PLAN
Scale: 1/8" = 1'-0"

ORIGINAL SHEET SIZE: 24" X 36"

ALL RIGHTS RESERVED. THESE DRAWINGS BELONG IN ANY FORM TO HOLADAY-PARKS, INC. NO PART OF THIS DOCUMENT MAY BE REPRODUCED IN ANY FORM OR BY ANY MEANS WITHOUT PERMISSION IN WRITING FROM HOLADAY PARKS, INC.

HOLADAY-PARKS, INC.
SMART Mechanical Solutions ®
Mechanical Solutions • Energy Services
Building Controls • Service & Maintenance
4600 S. 134TH PLACE
TUKWILA, WA 98168 • (206) 248-9700
HOLADAYPARKS.com
WA LICENSE NUMBER: HOLADPI379N0

MAXWELL GREENWICK — STATE OF WASHINGTON — 52266 — REGISTERED PROFESSIONAL ENGINEER
12/15/2025

APPROVED FOR CONSTRUCTION

3700 E MERCER WAY
BARNABIE POINT PROJECT

NO.	DATE	DESCRIPTION
3	12/15/25	100% CONSTRUCTION DOCS
2	08/25/25	90% CONSTRUCTION DOCS
1	06/04/25	BUILDING PERMIT

4 JUNE 2025
BUILDING PERMIT

PROJECT: 64605

LEVEL 02
HVAC PLAN

M2.02

KEYED NOTES

1. PROVIDE CAR-II CONSTANT AIRFLOW REGULATOR.
2. PROVIDE 1" UNDERCUT DOOR BY G.C.
3. 10"x6"/SL (<150 CFM) SOUNDLINED ACOUSTICAL BOOT W/TOP OPENING.
4. 16"x8"/SL (155-300 CFM) SOUNDLINED ACOUSTICAL BOOT W/TOP OPENING.
5. 24"x8"/SL (305-450 CFM) SOUNDLINED ACOUSTICAL BOOT W/TOP OPENING.
6. NOT USED.
7. PROVIDE CORROSION RESISTANT PVC DUCT.
8. ROOFTOP PACKAGED UNIT SHALL BE MOUNTED ON SPRING VIBRATION ISOLATION CURB WITH A MINIMUM STATIC DEFLECTION OF 2".
9. INDOOR FAN COIL SHALL BE POSITIONED TO PROVIDE HEATING / COOLING AIR DIRECTLY TOWARDS ELEVATOR CONTROLLER. FIELD COORDINATE FAN COIL LOCATION AND ACCESS REQUIREMENT WITH ELEVATOR CONTRACTOR.

SHEET NOTES

1. (CO2)(S) INDICATES A COMBINED CO2 AND TEMPERATURE LOCATED IN HIGH OCCUPANCY SPACES EXCEEDING 500 SQFT FLOOR AREA. SENSOR INSTALLED AT AN ELEVATION OF 48" A.F.F.
2. (S) INDICATE TEMPERATURE SENSOR INSTALLED AT AN ELEVATION OF 48" A.F.F.
3. ALL SENSORS INSTALLED ON THE INSIDE FACE OF AN EXTERIOR WALL SHALL BE PROVIDED WITH AN INSULATED BASE PLATE THAT PROVIDES A THERMAL BREAK FROM THE WALL FRAMING. FIELD TO VERIFY THERMAL BREAK IS INSTALLED PRIOR TO CLOSURE OF WALL.
4. SOFFIT COORDINATED FOR RETURN AIR PATH SHALL REMAIN CLEAR. PARTITIION WALL SHALL NOT PENETRATED IN SOFFIT.

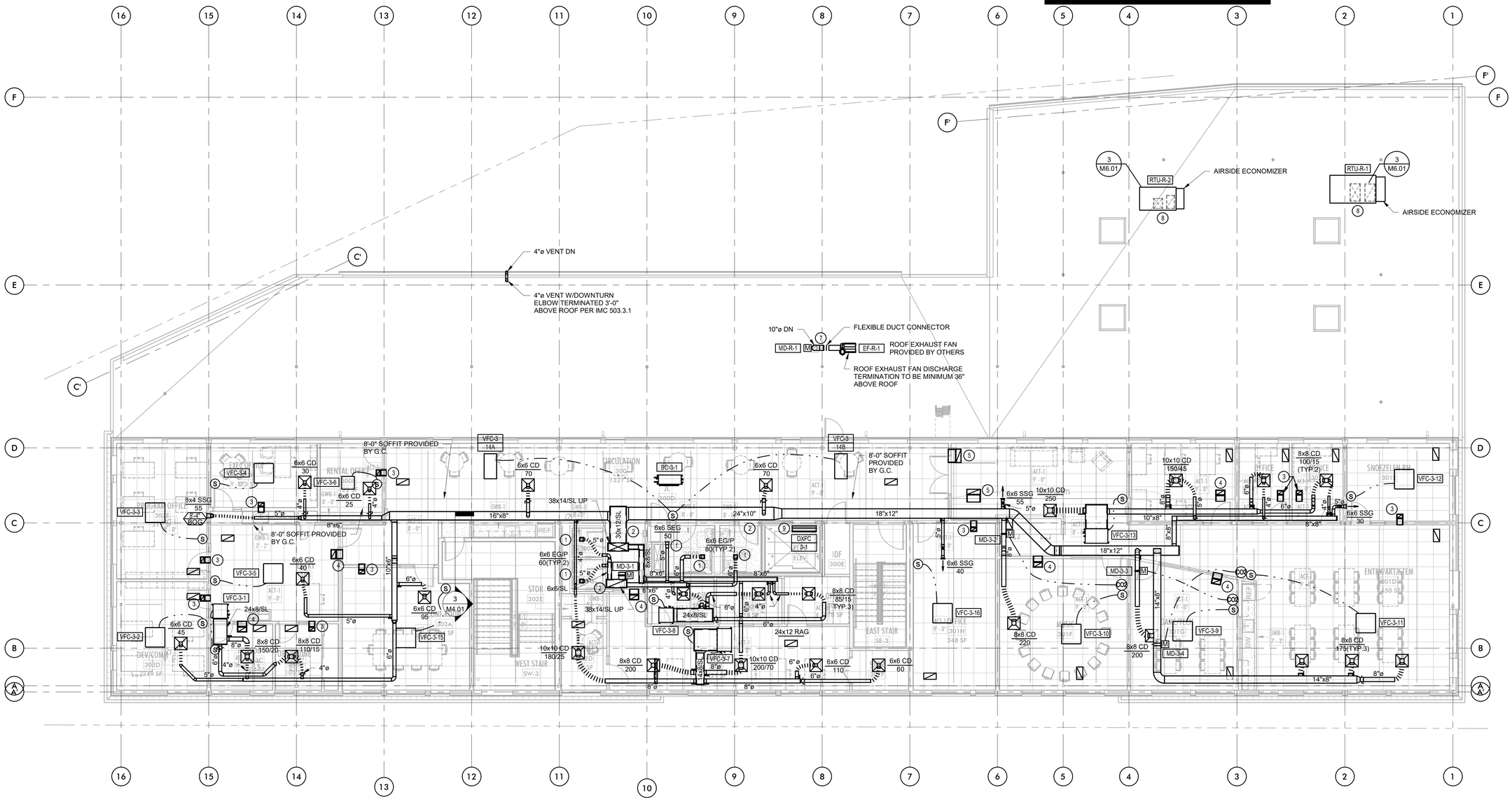

LEVEL 03 HVAC PLAN
Scale: 1/8" = 1'-0"

ORIGINAL SHEET SIZE: 24" X 36"

HOLADAY-PARKS, INC.
SMART Mechanical Solutions ®
Mechanical Solutions • Energy Services
Building Controls • Service & Maintenance
4600 S. 134TH PLACE
TUKWILA, WA 98168 • (206) 248-9700
HOLADAYPARKS.com
WA LICENSE NUMBER: HOLADPI379N0

MAXWELL GREENWALD — STATE OF WASHINGTON — 52266 — REGISTERED PROFESSIONAL ENGINEER
12/15/2025

APPROVED FOR CONSTRUCTION

3700 E MERCER WAY
BARNABIE POINT PROJECT

NO.	DATE	DESCRIPTION
3	12/15/25	100% CONSTRUCTION DOCS
2	08/25/25	90% CONSTRUCTION DOCS
1	06/04/25	BUILDING PERMIT

4 JUNE 2025
BUILDING PERMIT

PROJECT: 64605

LEVEL 03
HVAC PLAN

M2.03

ALL RIGHTS RESERVED. THESE DRAWINGS BELONG IN ANY FORM TO HOLADAY-PARKS, INC., NO PART OF THIS DOCUMENT MAY BE REPRODUCED IN ANY FORM OR BY ANY MEANS WITHOUT PERMISSION IN WRITING FROM HOLADAY PARKS, INC.

KEYED NOTES

1. ROOFTOP PACKAGED UNIT SHALL BE MOUNTED ON SPRING VIBRATION ISOLATION CURB WITH A MINIMUM STATIC DEFLECTION OF 2".
2. VRF CONDENSING UNIT SHOULD BE MOUNTED ON SPRING VIBRATION ISOLATION MOUNTS WITH A MINIMUM STATIC DEFLECTION OF 2".
3. VRF CONDENSING UNIT SHOULD BE MOUNTED ON NEOPRENE VIBRATION ISOLATION MOUNTS WITH A MINIMUM STATIC DEFLECTION OF 0.3".

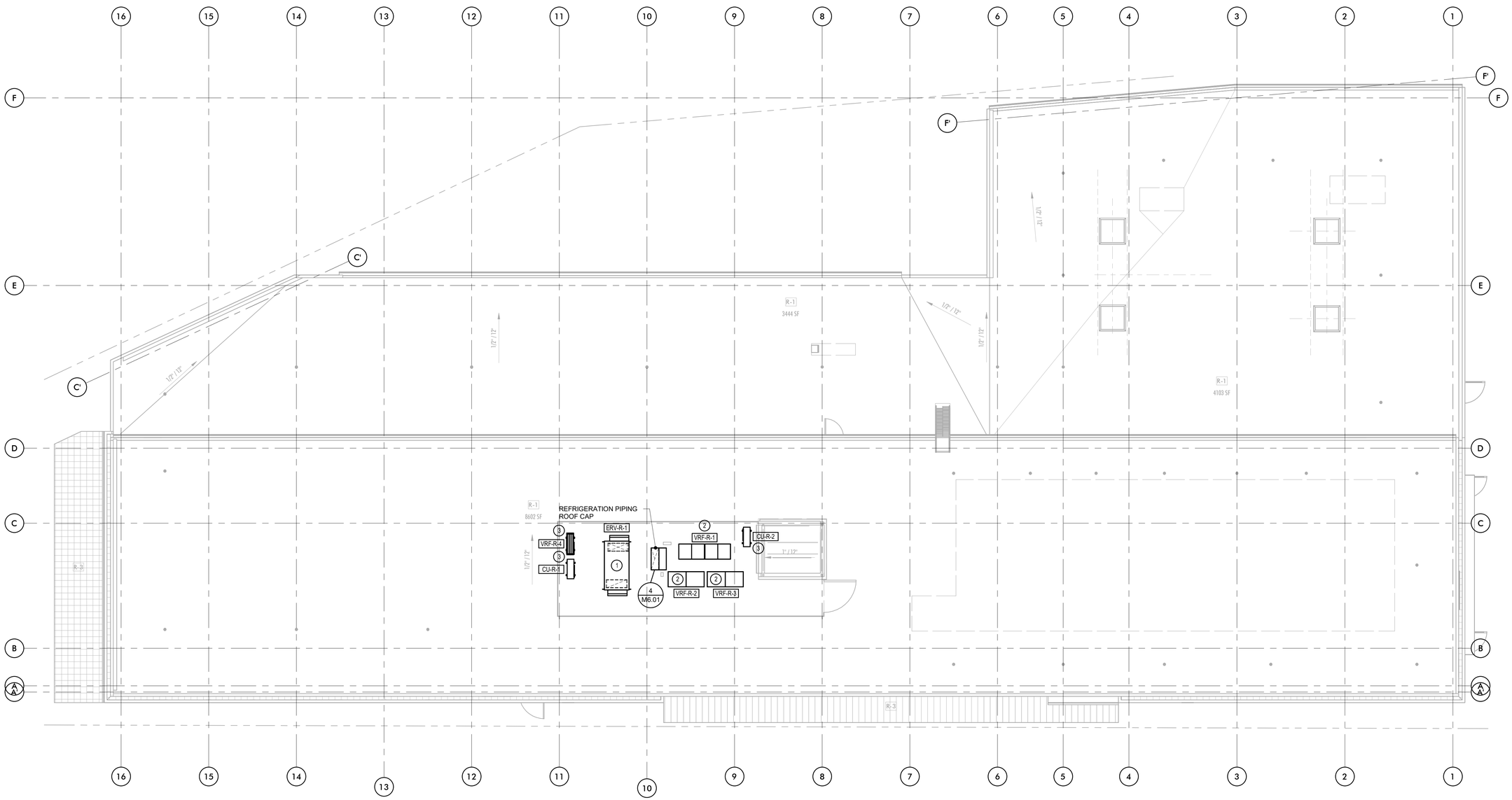

ROOF HVAC PLAN
Scale: 1/8" = 1'-0"

HOLADAY-PARKS, INC.
SMART Mechanical Solutions ®

Mechanical Solutions • Energy Services
Building Controls • Service & Maintenance
4600 S. 134TH PLACE
TUKWILA, WA 98168 • (206) 248-9700
HOLADAYPARKS.com
WA LICENSE NUMBER: HOLADPI379N0

MAXWELL GREENWALD — STATE OF WASHINGTON — 52266 — REGISTERED PROFESSIONAL ENGINEER
12/15/2025

APPROVED FOR CONSTRUCTION

3700 E MERCER WAY
BARNABIE POINT PROJECT

NO.	DATE	DESCRIPTION
3	12/15/25	100% CONSTRUCTION DOCS
2	08/25/25	90% CONSTRUCTION DOCS
1	06/04/25	BUILDING PERMIT

4 JUNE 2025
BUILDING PERMIT

PROJECT: 64605

ROOF
HVAC PLAN

M2.RF

ORIGINAL SHEET SIZE: 24" X 36"

ALL RIGHTS RESERVED. THESE DRAWINGS BELONG IN ANY FORM TO HOLADAY-PARKS, INC., NO PART OF THIS DOCUMENT MAY BE REPRODUCED IN ANY FORM OR BY ANY MEANS WITHOUT PERMISSION IN WRITING FROM HOLADAY PARKS, INC.

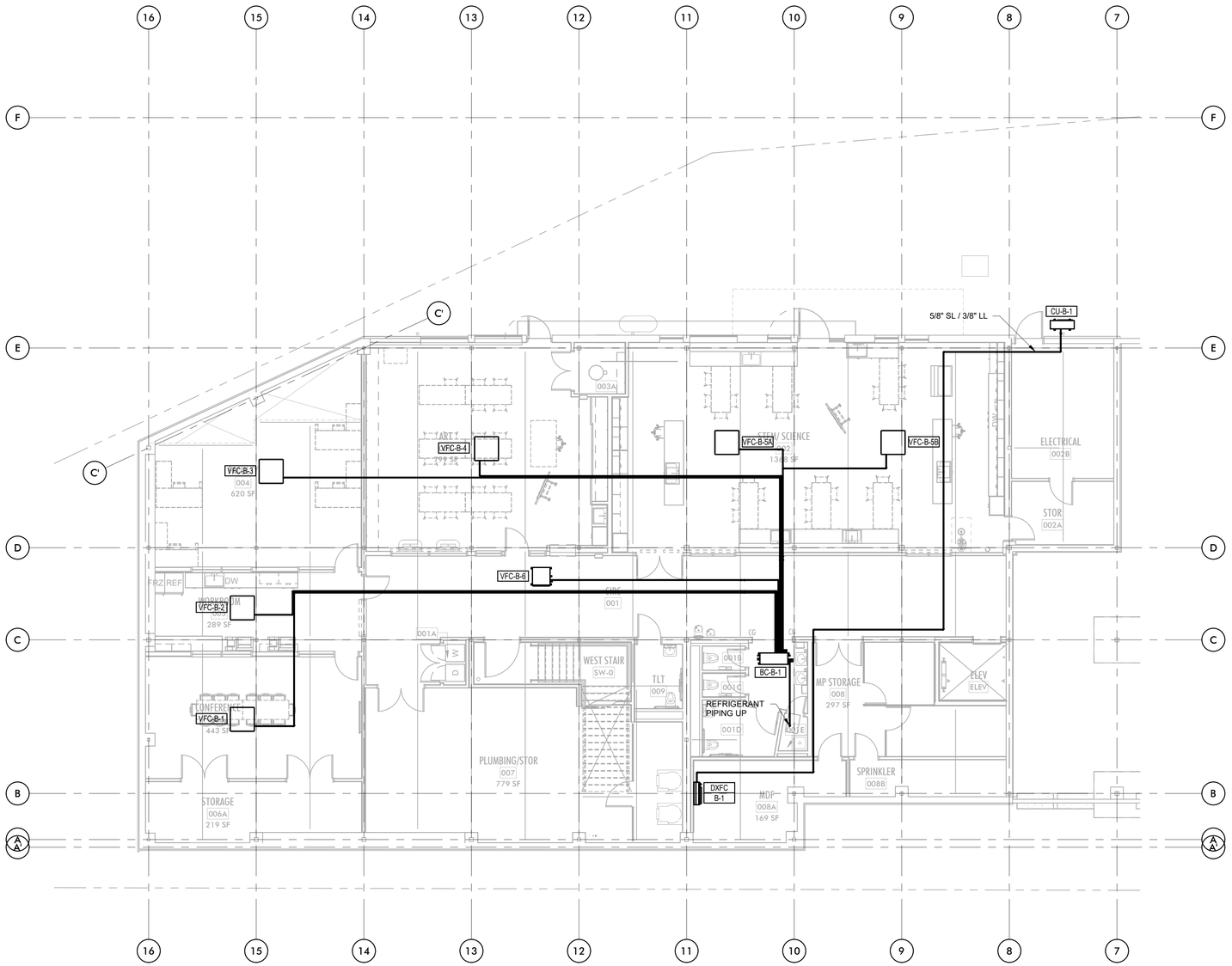

LEVEL B01 HVAC PIPING PLAN
Scale: 1/8" = 1'-0"

KEYED NOTES

1. SEE M5.01 - M5.03 FOR VRF SYSTEM PIPE SIZES

ORIGINAL SHEET SIZE: 24" X 36"

HOLADAY-PARKS, INC.
SMART Mechanical Solutions ®

Mechanical Solutions • Energy Services
Building Controls • Service & Maintenance
4600 S. 134TH PLACE
TUKWILA, WA 98168 • (206) 248-9700
HOLADAYPARKS.com
WA LICENSE NUMBER: HOLADPI379N0

MAXWELL GREENWALD — STATE OF WASHINGTON — 52266 — REGISTERED PROFESSIONAL ENGINEER
12/15/2025

APPROVED FOR CONSTRUCTION

3700 E MERCER WAY
BARNABIE POINT PROJECT

NO.	DATE	DESCRIPTION
3	12/15/25	100% CONSTRUCTION DOCS
2	08/25/25	90% CONSTRUCTION DOCS
1	06/04/25	BUILDING PERMIT

4 JUNE 2025
BUILDING PERMIT

PROJECT: 64605

LEVEL B01
HVAC PIPING PLAN

MP2.00

ALL RIGHTS RESERVED. THESE DRAWINGS BELONG IN ANY FORM TO HOLADAY-PARKS, INC. NO PART OF THIS DOCUMENT MAY BE REPRODUCED IN ANY FORM OR BY ANY MEANS WITHOUT PERMISSION IN WRITING FROM HOLADAY PARKS, INC.

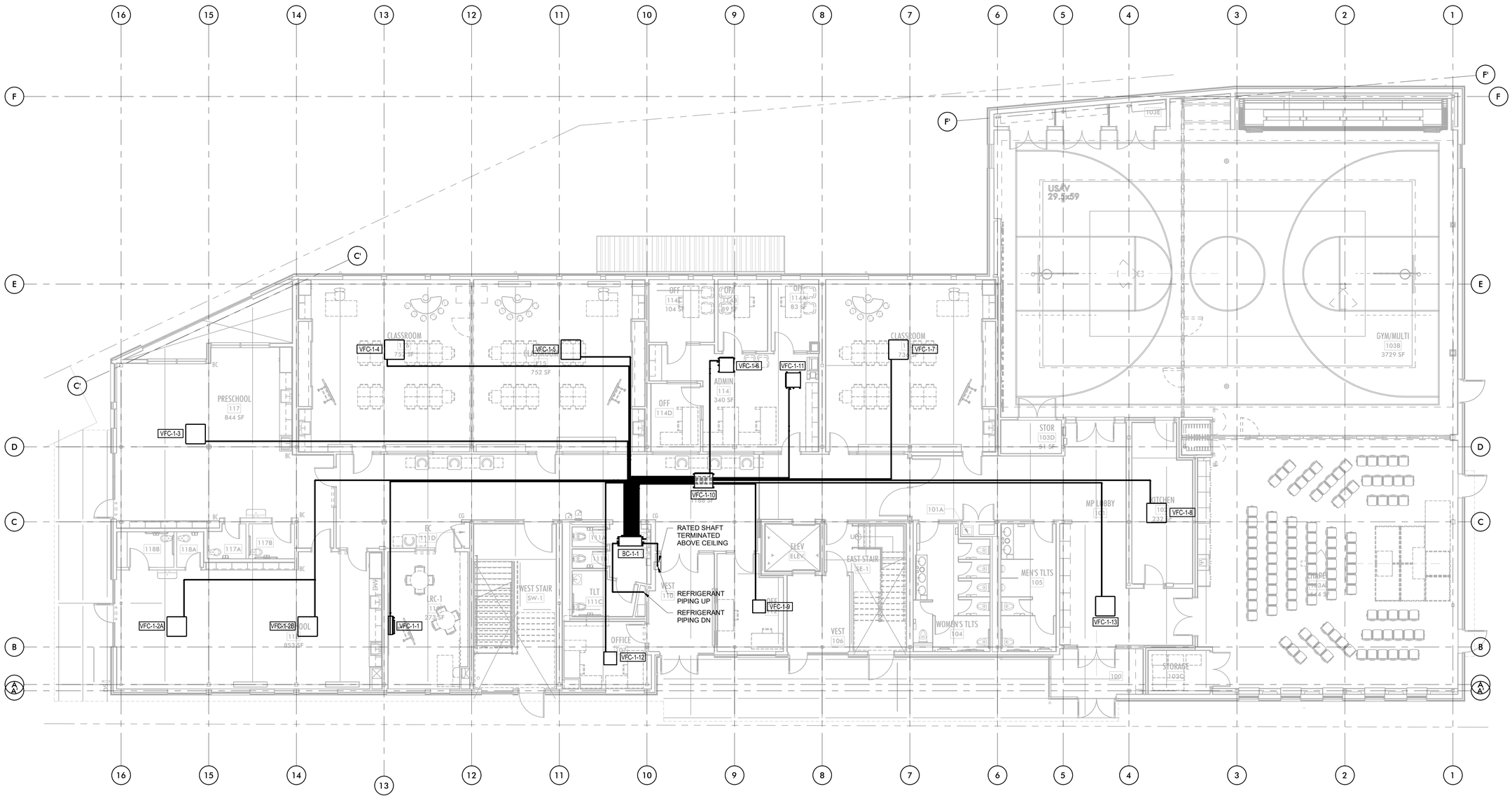

LEVEL 01 HVAC PIPING PLAN
Scale: 1/8" = 1'-0"

KEYED NOTES

1. SEE M5.01 - M5.03 FOR VRF SYSTEM PIPE SIZES

ORIGINAL SHEET SIZE: 24" X 36"

HOLADAY-PARKS, INC.
SMART Mechanical Solutions ®
Mechanical Solutions • Energy Services
Building Controls • Service & Maintenance
4600 S. 134TH PLACE
TUKWILA, WA 98168 • (206) 248-9700
HOLADAYPARKS.com
WA LICENSE NUMBER: HOLADPI379N0

MAXWELL GREENWALD — STATE OF WASHINGTON — 52266 — REGISTERED PROFESSIONAL ENGINEER
12/15/2025

APPROVED FOR CONSTRUCTION

3700 E MERCER WAY
BARNABIE POINT PROJECT

NO.	DATE	DESCRIPTION
3	12/15/25	100% CONSTRUCTION DOCS
2	08/25/25	90% CONSTRUCTION DOCS
1	06/04/25	BUILDING PERMIT

4 JUNE 2025
BUILDING PERMIT

PROJECT: 64605

LEVEL 01
HVAC PIPING PLAN
HVAC PLAN

MP2.01

ALL RIGHTS RESERVED. THESE DRAWINGS BELONG IN ANY FORM TO HOLADAY-PARKS, INC., NO PART OF THIS DOCUMENT MAY BE REPRODUCED IN ANY FORM OR BY ANY MEANS WITHOUT PERMISSION IN WRITING FROM HOLADAY PARKS, INC.

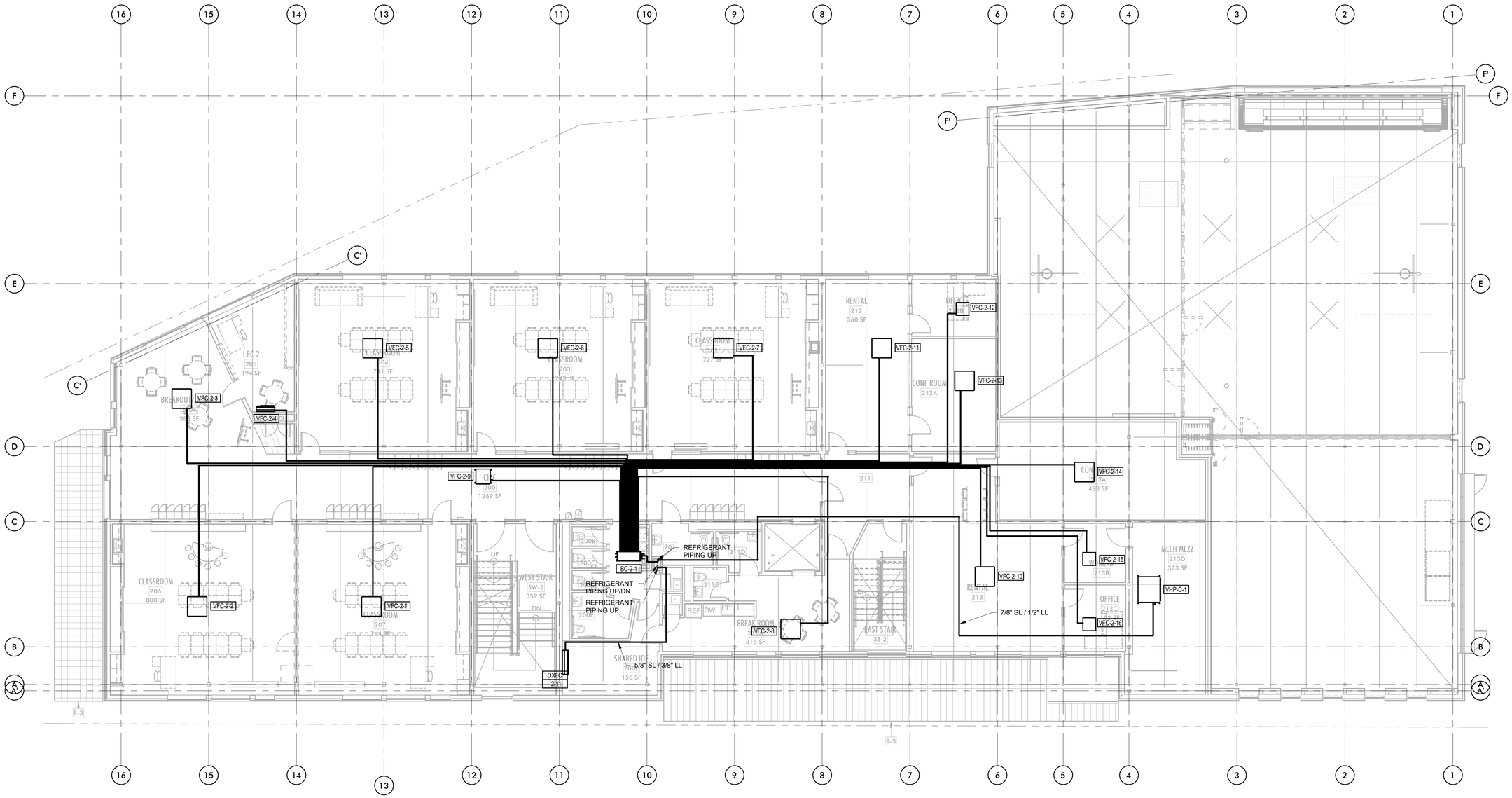

LEVEL 02 HVAC PIPING PLAN
Scale: 1/8" = 1'-0"

KEYED NOTES

1. SEE M5.01 - M5.03 FOR VRF SYSTEM PIPE SIZES

ORIGINAL SHEET SIZE: 24" X 36"

HOLADAY-PARKS, INC.
SMART Mechanical Solutions ®

Mechanical Solutions • Energy Services
Building Controls • Service & Maintenance
4600 S. 134TH PLACE
TUKWILA, WA 98168 • (206) 248-9700
HOLADAYPARKS.com
WA LICENSE NUMBER: HOLADPI379N0

MAXWELL L. GREENWALD — STATE OF WASHINGTON — 52266 — REGISTERED PROFESSIONAL ENGINEER
12/15/2025

APPROVED FOR CONSTRUCTION

3700 E MERCER WAY
BARNABIE POINT PROJECT

NO.	DATE	DESCRIPTION
3	12/15/25	100% CONSTRUCTION DOCS
2	08/25/25	90% CONSTRUCTION DOCS
1	06/04/25	BUILDING PERMIT

4 JUNE 2025
BUILDING PERMIT

PROJECT: 64605

LEVEL 02
HVAC PIPING PLAN
HVAC PLAN

MP2.02

ALL RIGHTS RESERVED. THESE DRAWINGS BELONG IN ANY FORM TO HOLADAY-PARKS, INC. NO PART OF THIS DOCUMENT MAY BE REPRODUCED IN ANY FORM OR BY ANY MEANS WITHOUT PERMISSION IN WRITING FROM HOLADAY PARKS, INC.

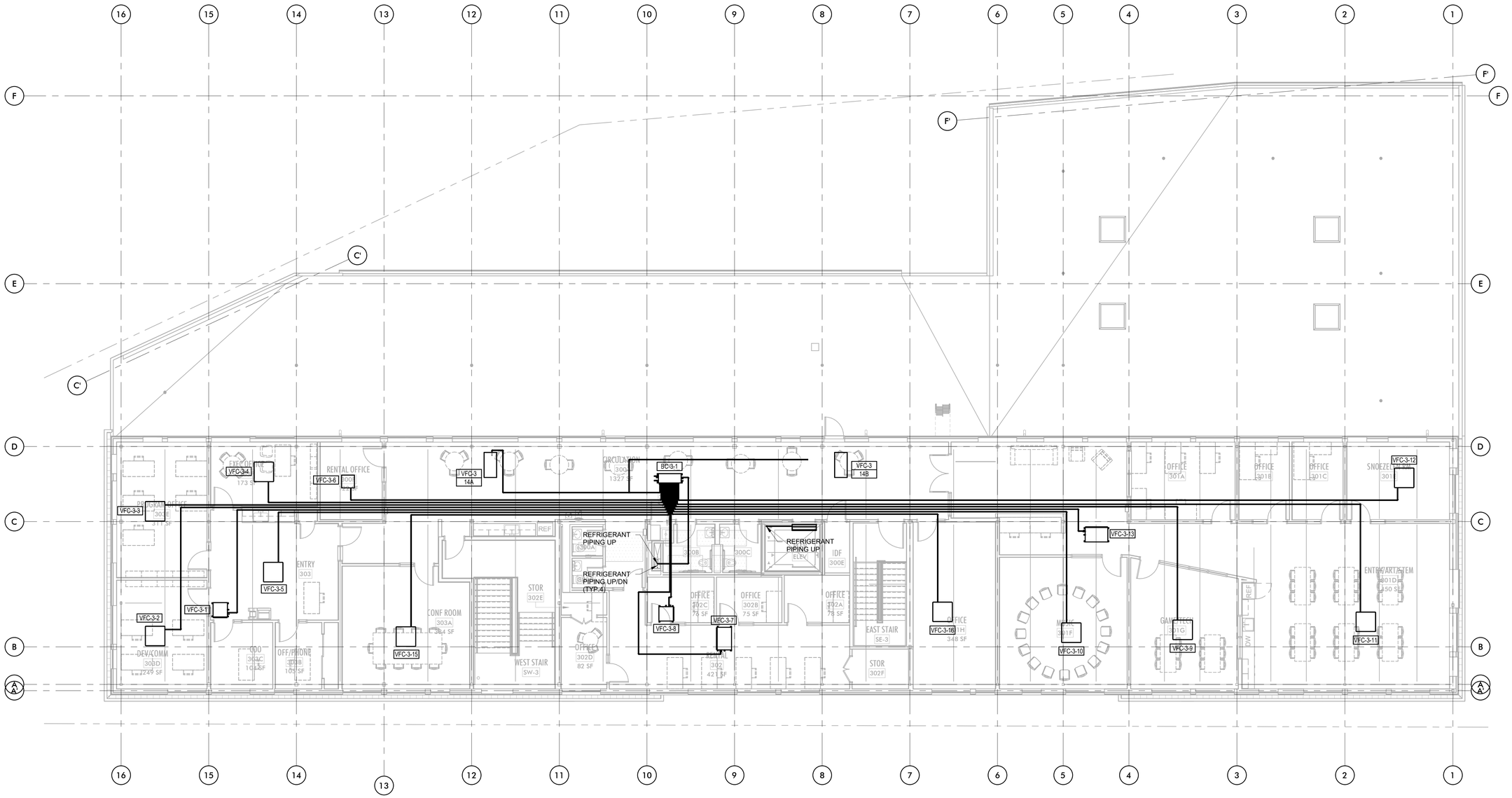

LEVEL 03 HVAC PIPING PLAN
Scale: 1/8" = 1'-0"

KEYED NOTES

1. SEE M5.01 - M5.03 FOR VRF SYSTEM PIPE SIZES

ORIGINAL SHEET SIZE: 24" X 36"

HOLADAY-PARKS, INC.
SMART Mechanical Solutions ®

Mechanical Solutions • Energy Services
Building Controls • Service & Maintenance
4600 S. 134TH PLACE
TUKWILA, WA 98168 • (206) 248-9700
HOLADAYPARKS.com
WA LICENSE NUMBER: HOLADPI379N0

MAXWELL GREENWALD — STATE OF WASHINGTON — 52266 — REGISTERED PROFESSIONAL ENGINEER
12/15/2025

APPROVED FOR CONSTRUCTION

3700 E MERCER WAY
BARNABIE POINT PROJECT

NO.	DATE	DESCRIPTION
3	12/15/25	100% CONSTRUCTION DOCS
2	08/25/25	90% CONSTRUCTION DOCS
1	06/04/25	BUILDING PERMIT

4 JUNE 2025
BUILDING PERMIT

PROJECT: 64605

LEVEL 03
HVAC PIPING PLAN
HVAC PLAN

MP2.03

ALL RIGHTS RESERVED. THESE DRAWINGS BELONG IN ANY FORM TO HOLADAY-PARKS, INC. NO PART OF THIS DOCUMENT MAY BE REPRODUCED IN ANY FORM OR BY ANY MEANS WITHOUT PERMISSION IN WRITING FROM HOLADAY PARKS, INC.

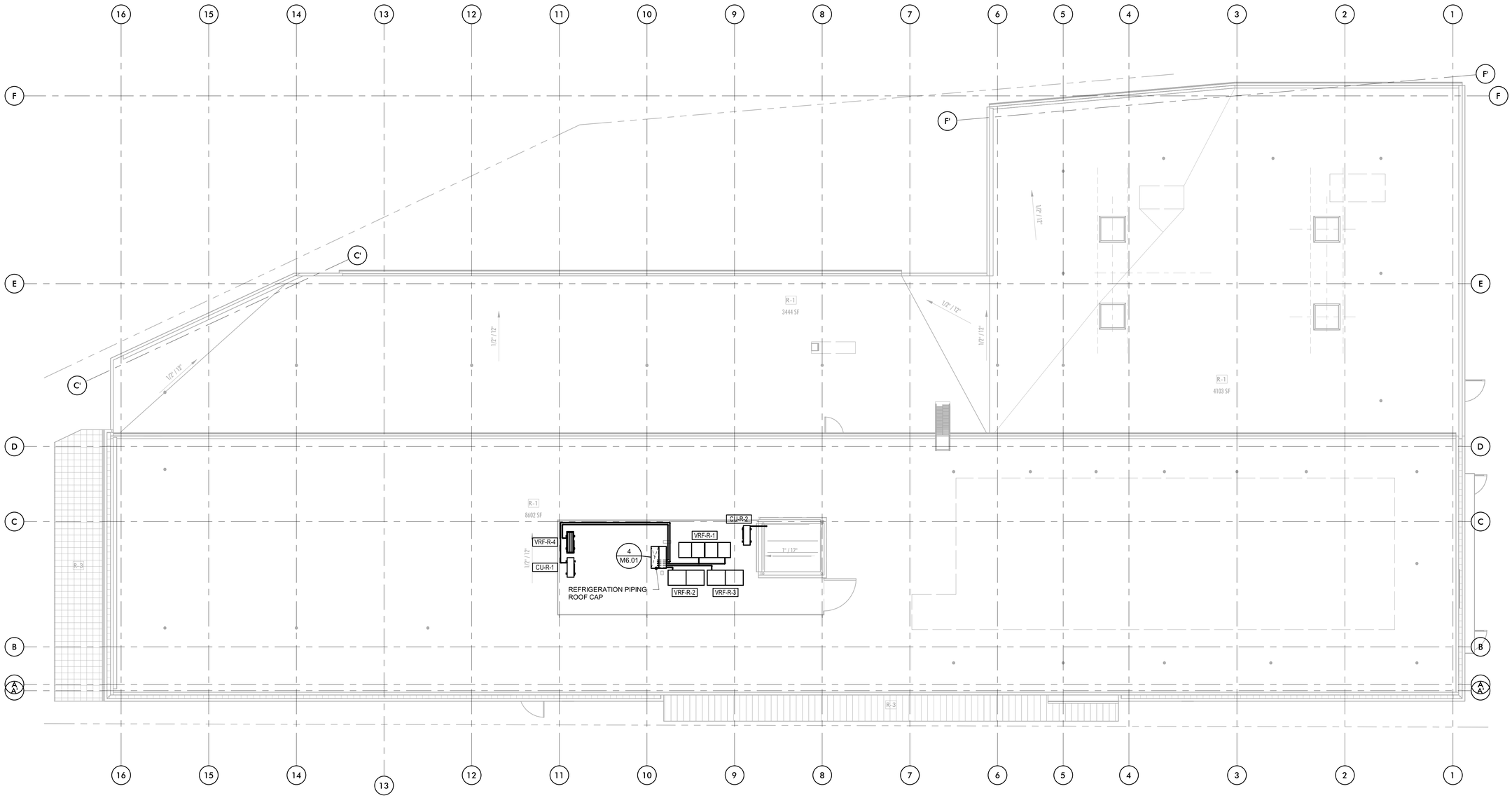

ROOF HVAC PIPING PLAN
Scale: 1/8" = 1'-0"

ORIGINAL SHEET SIZE: 24" X 36"

HOLADAY-PARKS, INC.
SMART Mechanical Solutions ®

Mechanical Solutions • Energy Services
Building Controls • Service & Maintenance
4600 S. 134TH PLACE
TUKWILA, WA 98168 • (206) 248-9700
HOLADAYPARKS.com
WA LICENSE NUMBER: HOLADPI379N0

MAXWELL GREENWALD — STATE OF WASHINGTON — 52266 — REGISTERED PROFESSIONAL ENGINEER
12/15/2025

APPROVED FOR CONSTRUCTION

3700 E MERCER WAY
BARNABIE POINT PROJECT

NO.	DATE	DESCRIPTION
3	12/15/25	100% CONSTRUCTION DOCS
2	08/25/25	90% CONSTRUCTION DOCS
1	06/04/25	BUILDING PERMIT

4 JUNE 2025
BUILDING PERMIT

PROJECT: 64605

ROOF HVAC
PIPING PLAN

MP2.RF

ALL RIGHTS RESERVED. THESE DRAWINGS BELONG IN ANY FORM TO HOLADAY-PARKS, INC., NO PART OF THIS DOCUMENT MAY BE REPRODUCED IN ANY FORM OR BY ANY MEANS WITHOUT PERMISSION IN WRITING FROM HOLADAY PARKS, INC.

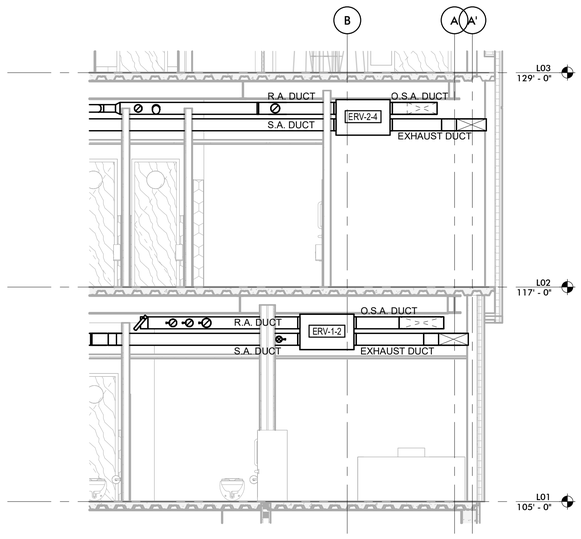

1 SECTION - ERV
Scale: 1/4" = 1'-0"

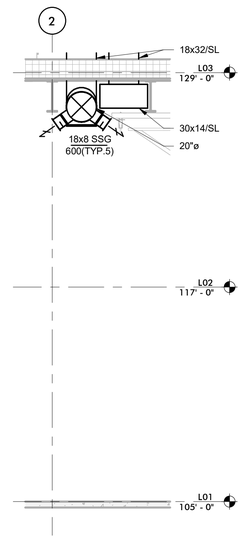

2 SECTION - RTU-R-1 GYM/MULTI SUPPLY-RETURN
Scale: 1/4" = 1'-0"

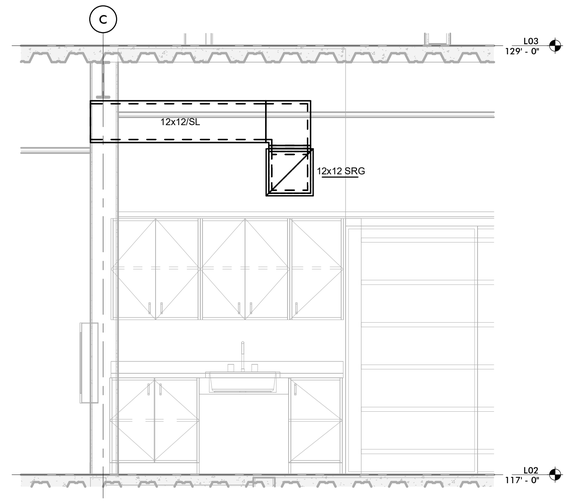

3 SECTION - CLASSROOM SRG
Scale: 1/2" = 1'-0"

ORIGINAL SHEET SIZE: 24" x 36"

HOLADAY-PARKS, INC.
SMART Mechanical Solutions ®
Mechanical Solutions • Energy Services
Building Controls • Service & Maintenance
4600 S. 134TH PLACE
TUKWILA, WA 98168 • (206) 248-9700
HOLADAYPARKS.com
WA LICENSE NUMBER: HOLADPI379N0

MAXWELL GREENACK
STATE OF WASHINGTON
52266
REGISTERED
PROFESSIONAL ENGINEER

12/15/25

APPROVED
FOR CONSTRUCTION

3700 E MERCER WAY
BARNABIE POINT PROJECT

NO.	DATE	DESCRIPTION
3	12/15/25	100% CONSTRUCTION DOCS
2	08/25/25	90% CONSTRUCTION DOCS
1	06/04/25	BUILDING PERMIT

4 JUNE 2025
BUILDING PERMIT

PROJECT: 64605

SECTIONS

M4.01

ALL RIGHTS RESERVED. THESE DRAWINGS BELONG IN ANY FORM TO HOLADAY-PARKS, INC. NO PART OF THIS DOCUMENT MAY BE REPRODUCED IN ANY FORM OR BY ANY MEANS WITHOUT PERMISSION IN WRITING FROM HOLADAY PARKS, INC.

Design View Piping Diagrams

Quick Results

Connection Summary

Indoor Units:	21 / 2 to 50	
Capacity:	320 / 144 to 432 (111.1%)	
* Connectable capacity is not actual capacity.		
Total Pipe Length:	0/3116.8	feet
Furthest Actual:	0/541	feet
Furthest Equiv.:	0/623	feet
Furthest IU from BC Actual:	0/0	feet
Furthest IU from BC Equiv.:	0/0	feet
Furthest IU from BC Thru Sub BC Actual:	0/0	feet
Furthest IU from BC Thru Sub BC Equiv.:	0/0	feet

Refrigerant

System Refrigerant: **R410A**
Additional Field-Charge: **40.93 lbs**
Total System Charge: **88.55 lbs**

Correction Factors

	Cooling	Heating
Outdoor Unit Capacity:	1.03	1.00
Outdoor Temperature:	1.05	0.77
Piping Length:	1.00	1.00
Defrosting:	-	0.95
User Derate:	1.00	1.00
Outdoor Altitude:	1.00	1.00
	1.08	**0.73**

Conditions

Cooling		Heating	
Indoor Dry Bulb	80.0 °F	Indoor Dry Bulb	70.0 °F
Indoor Wet Bulb	67.0 °F		
Indoor Humidity	51.8 %	Outdoor Dry Bulb	22.0 °F
		Outdoor Wet Bulb	20.2 °F
Outdoor Dry Bulb	85.0 °F	Outdoor Humidity	72.8 %

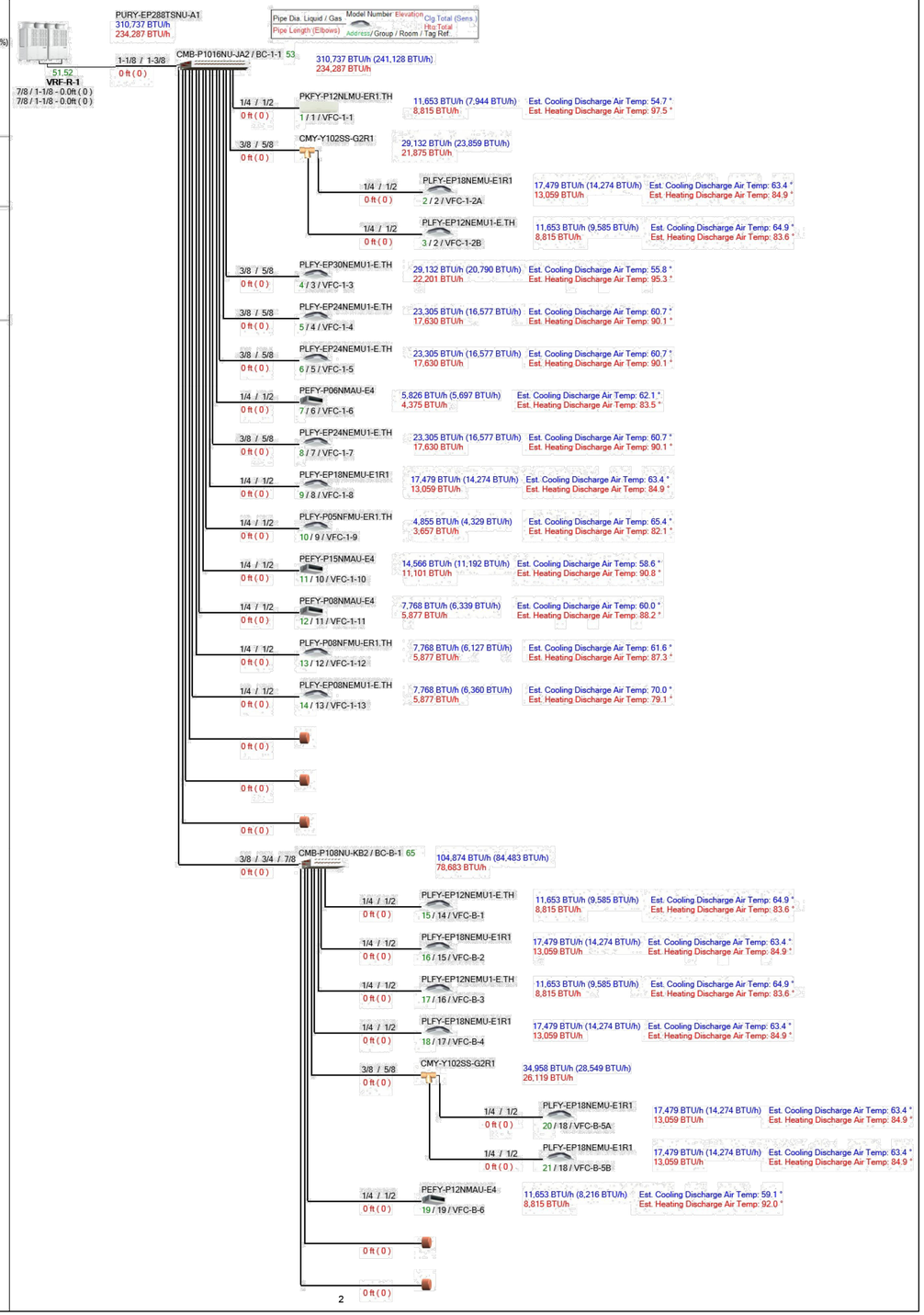

ORIGINAL SHEET SIZE: 24" X 36"

HOLADAY-PARKS, INC.
SMART Mechanical Solutions©

Mechanical Solutions • Energy Services
Building Controls • Service & Maintenance
4600 S. 134TH PLACE
TUKWILA, WA 98168 • (206) 248-9700
HOLADAYPARKS.COM
WA LICENSE NUMBER: HOLADPI379N0

MAXWELL GROENEWOLD — STATE OF WASHINGTON — 52266 — REGISTERED PROFESSIONAL ENGINEER
12/15/2025

APPROVED FOR CONSTRUCTION

3700 E MERCER WAY
BARNABIE POINT

NO.	DATE	DESCRIPTION
3	12/15/25	100% CONSTRUCTION DOCS
2	08/25/25	90% CONSTRUCTION DOCS
1	06/04/25	BUILDING PERMIT

4 JUNE 2025

BUILDING PERMIT

PROJECT: 64605

RISER DIAGRAM

M5.01

ALL RIGHTS RESERVED. THESE DRAWINGS BELONG IN ANY FORM TO HOLADAY-PARKS, INC. NO PART OF THIS DOCUMENT MAY BE REPRODUCED IN ANY FORM OR BY ANY MEANS WITHOUT PERMISSION IN WRITING FROM HOLADAY-PARKS, INC.

Quick Results

Connection Summary

Indoor Units:	16 / 2 to 50
Capacity:	233 / 108 to 324 (107.9%)
* Connectable capacity is not actual capacity.	
Total Pipe Length:	0/2460.6 feet
Furthest Actual:	0/541 feet
Furthest Equiv.:	0/623 feet
Furthest IU from BC Actual:	0/0 feet
Furthest IU from BC Equiv.:	0/0 feet
Furthest IU from BC Thru Sub BC Actual:	0/0 feet
Furthest IU from BC Thru Sub BC Equiv.:	0/0 feet

Refrigerant

System Refrigerant:	**R410A**
Additional Field-Charge:	**45.30 lbs**
Total System Charge:	**71.32 lbs**

Correction Factors

	Cooling	Heating
Outdoor Unit Capacity:	1.00	1.00
Outdoor Temperature:	1.05	0.72
Piping Length:	1.00	1.00
Defrosting:	-	0.91
User Derate:	1.00	1.00
Outdoor Altitude:	1.00	1.00
	1.05	**0.66**

Conditions

Cooling		Heating	
Indoor Dry Bulb	80.0 °F	Indoor Dry Bulb	70.0 °F
Indoor Wet Bulb	67.0 °F		
Indoor Humidity	51.8 %	Outdoor Dry Bulb	22.0 °F
		Outdoor Wet Bulb	20.2 °F
Outdoor Dry Bulb	85.0 °F	Outdoor Humidity	72.8 %

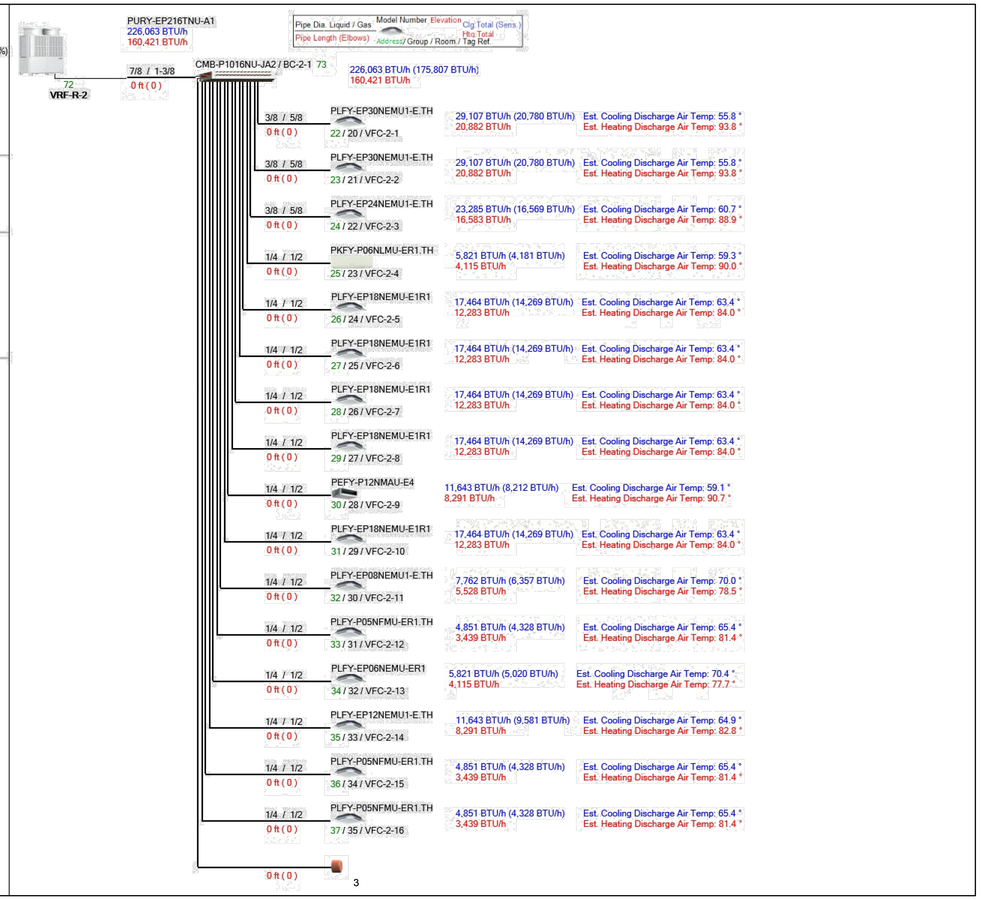

Quick Results

Connection Summary

Indoor Units:	1 / 1 to 30
Capacity:	96 / 48 to 124 (100.0%)
* Connectable capacity is not actual capacity.	
Total Pipe Length:	0/1016 feet
Furthest Actual:	0/426 feet
Furthest Equiv.:	0/426 feet
After 1st Branch Actual:	0/98 feet
After 1st Branch Equiv.:	0/98 feet

Refrigerant

System Refrigerant:	**R410A**
Additional Field-Charge:	**7.69 lbs**
Total System Charge:	**28.19 lbs**

Correction Factors

	Cooling	Heating
Outdoor Unit Capacity:	1.00	1.00
Outdoor Temperature:	1.01	0.78
Piping Length:	1.00	1.00
Defrosting:	-	0.95
User Derate:	1.00	1.00
Outdoor Altitude:	1.00	1.00
	1.01	**0.74**

Conditions

Cooling		Heating	
Indoor Dry Bulb	80.0 °F	Indoor Dry Bulb	70.0 °F
Indoor Wet Bulb	67.0 °F		
Indoor Humidity	51.8 %	Outdoor Dry Bulb	22.0 °F
		Outdoor Wet Bulb	20.2 °F
Outdoor Dry Bulb	85.0 °F	Outdoor Humidity	72.8 %

MXZ-SM systems can operate within 50-130% connected capacity and are AHRI certified as multi zone systems. MXZ-SM systems are not AHRI certified as single zone systems.

MXZ-SM systems can operate within 50-130% connected capacity and are AHRI certified as multi zone systems. MXZ-SM systems are not AHRI certified as single zone systems.

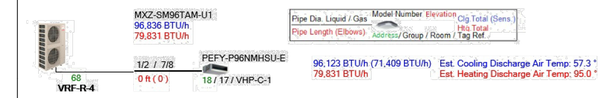

5

HOLADAY-PARKS, INC.
SMART Mechanical Solutions©

Mechanical Solutions • Energy Services
Building Controls • Service & Maintenance

4600 S. 134TH PLACE
TUKWILA, WA 98168 • (206) 248-9700

HOLADAYPARKS.com
WA LICENSE NUMBER: HOLADPI379N0



12/15/2025

APPROVED
FOR CONSTRUCTION

3700 E MERCER WAY
BARNABIE POINT

NO.	DATE	DESCRIPTION
3	12/15/25	100% CONSTRUCTION DOCS
2	08/25/25	90% CONSTRUCTION DOCS
1	06/04/25	BUILDING PERMIT

4 JUNE 2025

BUILDING PERMIT

PROJECT: 64605

RISER DIAGRAM

M5.02

ORIGINAL SHEET SIZE: 24" X 36"

ALL RIGHTS RESERVED. THESE DRAWINGS BELONG IN ANY FORM TO HOLADAY-PARKS, INC. NO PART OF THIS DOCUMENT MAY BE REPRODUCED IN ANY FORM OR BY ANY MEANS WITHOUT PERMISSION IN WRITING FROM HOLADAY PARKS, INC.

Quick Results

Connection Summary

Indoor Units:	17 / 2 to 50	
Capacity:	246 / 108 to 324 (113.9%)	
* Connectable capacity is not actual capacity.		
Total Pipe Length:	0/2460.6	feet
Furthest Actual:	0/541	feet
Furthest Equiv.:	0/623	feet
Furthest IU from BC Actual:	0/0	feet
Furthest IU from BC Equiv.:	0/0	feet
Furthest IU from BC Thru Sub BC Actual:	0/0	feet
Furthest IU from BC Thru Sub BC Equiv.:	0/0	feet

Refrigerant

System Refrigerant:	R410A
Additional Field-Charge:	46.74 lbs
Total System Charge:	72.75 lbs

Correction Factors

	Cooling	Heating
Outdoor Unit Capacity:	1.00	1.00
Outdoor Temperature:	1.05	0.72
Piping Length:	1.00	1.00
Defrosting:	-	0.91
User Derate:	1.00	1.00
Outdoor Altitude:	1.00	1.00
	1.05	0.66

Conditions

Cooling		Heating	
Indoor Dry Bulb	80.0 °F	Indoor Dry Bulb	70.0 °F
Indoor Wet Bulb	67.0 °F		
Indoor Humidity	51.8 %	Outdoor Dry Bulb	22.0 °F
		Outdoor Wet Bulb	20.2 °F
Outdoor Dry Bulb	85.0 °F	Outdoor Humidity	72.8 %



HOLADAY-PARKS, INC.
SMART Mechanical Solutions©

Mechanical Solutions • Energy Services
Building Controls • Service & Maintenance

4600 S. 134TH PLACE
TUKWILA, WA 98168 • (206) 248-9700

HOLADAYPARKS.COM
WA LICENSE NUMBER: HOLADPI379N0

MAXWELL GROENEVELD
STATE OF WASHINGTON
52096
REGISTERED
PROFESSIONAL ENGINEER
12/15/2025

APPROVED
FOR CONSTRUCTION

3700 E MERCER WAY
BARNABIE POINT

NO.	DATE	DESCRIPTION
3	12/15/25	100% CONSTRUCTION DOCS
2	08/25/25	90% CONSTRUCTION DOCS
1	06/04/25	BUILDING PERMIT

4 JUNE 2025
BUILDING PERMIT

PROJECT: 64605

RISER DIAGRAM

M5.03

ORIGINAL SHEET SIZE: 24" X 36"

ALL RIGHTS RESERVED. THESE DRAWINGS BELONG IN ANY FORM TO HOLADAY-PARKS, INC. NO PART OF THIS DOCUMENT MAY BE REPRODUCED IN ANY FORM OR BY ANY MEANS WITHOUT PERMISSION IN WRITING FROM HOLADAY PARKS, INC.

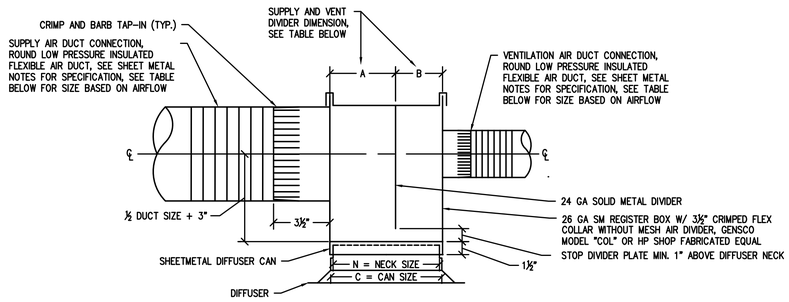

SUPPLY AIR PLUS VENTILATION DIFFUSER TABLE

NOMINAL DIFFUSER SIZE (INxIN)	NECK SIZE DIM "N" (INxIN)	AIRFLOW RANGE		DIFFUSER CONFIGURATION				DIVIDER DIMENSIONS	
		MINIMUM DIFFUSER AIRFLOW (CFM)	MAXIMUM DIFFUSER AIRFLOW (CFM)	SUPPLY INLET DIA. (IN)	VENT INLET DIA. (IN)	MAXIMUM SUPPLY AIRFLOW (CFM)	MAXIMUM VENT AIRFLOW (CFM)	A (IN)	B (IN)
6 x 6	5.75 x 5.75	0	95	6	4	60	35	3	3
6 x 6	5.75 x 5.75	0	95	6	5	40	55	3	3
8 x 8	7.75 x 7.75	95	225	8	4	190	35	5	3
8 x 8	7.75 x 7.75	95	225	8	5	170	55	5	3
8 x 8	7.75 x 7.75	95	225	8	6	150	75	5	3
10 x 10	9.75 x 9. 75	225	325	10	4	290	35	7	3
10 x 10	9.75 x 9. 75	225	325	10	5	270	55	7	3
10 x 10	9.75 x 9. 75	225	325	10	6	250	75	7	3
10 x 10	9.75 x 9. 75	225	325	10	8	230	95	7	3
12 x 12	11.75 x 11.75	325	450	12	4	415	35	9	3
12 x 12	11.75 x 11.75	325	450	12	5	395	55	9	3
12 x 12	11.75 x 11.75	325	450	12	6	375	75	9	3
12 x 12	11.75 x 11.75	325	450	12	8	355	95	9	3

1 DETAIL – SUPPLY & VENTILATION DIFFUSER CAN & TAP-IN
SCALE: NTS

2 DETAIL – NOT USED
SCALE: NTS

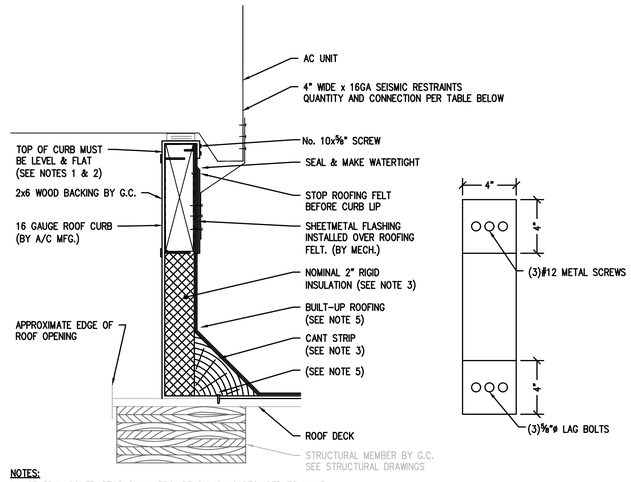

NOTES:
1. GENERAL CONTRACTOR SHALL PROVIDE SHIMS AS REQUIRED TO MAKE CURB LEVEL. MAXIMUM ALLOWABLE SLOPE IS ¼" PER 10'.
2. TOP OF CURB MUST BE TRUE (FLAT) TO PROVIDE AN ACCEPTABLE SEALING SURFACE.
3. ROOF STRUCTURE, ROOF DECK, INSULATION, CANT STRIP & BUILT-UP ROOFING BY GENERAL CONTRACTOR.
4. STRUCTURAL MEMBERS MUST NOT INTERFERE WITH ROOF OPENINGS.
5. FASTEN ROOF CURB SECURELY TO STRUCTURAL MEMBERS.

FASTENER SCHEDULE

EQUIP. SYM.	UNIT DIMENSIONS			WEIGHT	# OF 16GA STRAPS	# OF FAST. PER STRAP ①	INSIDE OF CURB DIMENSIONS			
	L	W	H	LBS.			L	W	H	WEIGHT
RTU-R-1	88.5"	53.25"	51"	1130	12	6(3 ON TOP)	81"	46.5"	14"	100
RTU-R-2	70"	44.25"	47"	885	10	6(3 ON TOP)	62"	41"	14"	100

① SEE STRAP DETAIL FOR FASTENER TYPE AND SIZE

3 DETAIL – CURB WITH SEISMIC RESTRAINT
SCALE: NTS

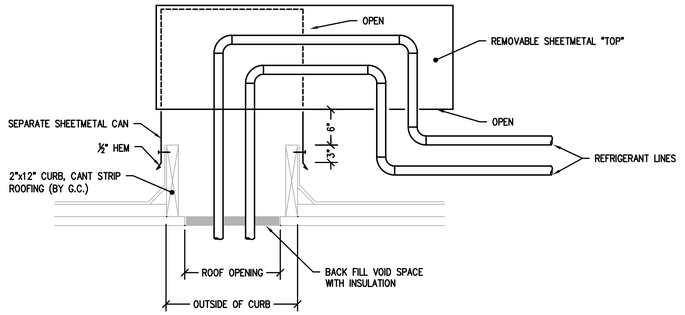

4 DETAIL – ROOF CAP PIPING PENETRATION
SCALE: NTS

HOLADAY-PARKS, INC.
SMART Mechanical Solutions©
Mechanical Solutions • Energy Services
Building Controls • Service & Maintenance
4600 S. 134TH PLACE
TUKWILA, WA 98168 • (206) 248-9700
HOLADAYPARKS.COM
WA LICENSE NUMBER: HOLADPI379N0

MAXWELL GREENBECK — STATE OF WASHINGTON — 52096 — REGISTERED PROFESSIONAL ENGINEER
12/15/2025

APPROVED FOR CONSTRUCTION

3700 E MERCER WAY
BARNABIE POINT

NO.	DATE	DESCRIPTION
3	12/15/25	100% CONSTRUCTION DOCS
2	08/25/25	90% CONSTRUCTION DOCS
1	06/04/25	BUILDING PERMIT

4 JUNE 2025
BUILDING PERMIT

PROJECT: 64605

DETAILS

M6.01

ORIGINAL SHEET SIZE: 24" X 36"

ALL RIGHTS RESERVED: THESE DRAWINGS BELONG IN ANY FORM TO HOLADAY-PARKS, INC. NO PART OF THIS DOCUMENT MAY BE REPRODUCED IN ANY FORM OR BY ANY MEANS WITHOUT PERMISSION IN WRITING FROM HOLADAY PARKS, INC.

Structural Calculations

Barnabie Point Mechanical

3700 E Mercer Way

Mercer Island, WA 98040

DCI Job Number 25011-0215

May 29, 2025

LOCAL EXPERTISE, NATIONAL EXPERIENCE. LEARN MORE AT DCI-ENGINEERS.COM

ASCE Hazards Report

Address:
3700 E Mercer Way
Mercer Island, Washington
98040

Standard: ASCE/SEI 7-16
Risk Category: II
Soil Class: D - Default (see Section 11.4.3)

Latitude: 47.576943
Longitude: -122.203807
Elevation: 89.191010344426971 ft (NAVD 88)

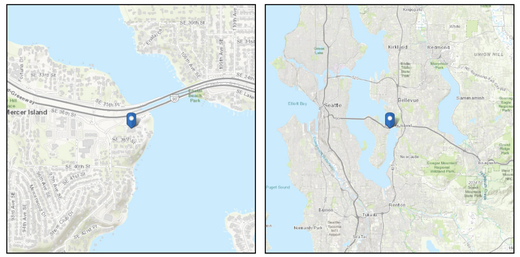

Wind

Results:

Wind Speed	98 Vmph
10-year MRI	67 Vmph
25-year MRI	74 Vmph
50-year MRI	78 Vmph
100-year MRI	83 Vmph

Data Source: ASCE/SEI 7-16, Fig. 26.5-1B and Figs. CC.2-1–CC.2-4, and Section 26.5.2
Date Accessed: Fri May 23 2025

Value provided is 3-second gust wind speeds at 33 ft above ground for Exposure C Category, based on linear interpolation between contours. Wind speeds are interpolated in accordance with the 7-16 Standard. Wind speeds correspond to approximately a 7% probability of exceedance in 50 years (annual exceedance probability = 0.00143, MRI = 700 years).

Site is not in a hurricane-prone region as defined in ASCE/SEI 7-16 Section 26.2.

Seismic

Site Soil Class: D - Default (see Section 11.4.3)
Results:

S_S :	1.396	S_{D1} :	N/A
S_1 :	0.485	T_L :	6
F_a :	1.2	PGA :	0.597
F_v :	N/A	PGA_M :	0.717
S_{MS} :	1.675	F_{PGA} :	1.2
S_{M1} :	N/A	I_e :	1
S_{DS} :	1.116	C_v :	1.379

Ground motion hazard analysis may be required. See ASCE/SEI 7-16 Section 11.4.8.
Data Accessed: Fri May 23 2025
Date Source: USGS Seismic Design Maps

HOLADAY-PARKS, INC.
SMART Mechanical Solutions©
Mechanical Solutions • Energy Services
Building Controls • Service & Maintenance
4600 S. 134TH PLACE
TUKWILA, WA 98168 • (206) 248-9700
HOLADAYPARKS.COM
WA LICENSE NUMBER: HOLADPI379N0

APPROVED FOR CONSTRUCTION

Project # : 24011-0016 Page # :
Proj. Name : Sunbreak Mechanical Anchorage
Engineer : MSS Date : 5/29/2025
Subject : Equipment Summary

Design Criteria:

Codes 2018 IBC
ASCE 7-16

Design: ASD

ADD UNIT

DELETE UNIT

Equipment Summary, Loads & Anchorage

Equipment	Unit Height (ft)	Long Length (ft)	Short Length (ft)	Architectual Comonent Description (Data tab)	Total Wgt. (lqs)	Curb Ht. (ft)	Seismic Coefficients		Attachments Supporting Weight	Attachments Resisting OT	Resist Shear	Omega [1]	Uplift	Shear
							Location	z (unit height (ft))						
VRF	6.00	4.10	2.44	Spring-isolated components and systems and vibration-isolated floors closely restrained using built-in or separate elastomeric snubbing devices or resilient perimeter stops	1.36	0.00	Outdoor	35.00	4.00	2.00	4.00	No	**-829 lb**	**398 lb**
RTU	4.25	7.33	4.20	Air-side HVACR, fans, air handles, air conditioning units, cabinet heaters, air distribution boxes, and other mechanical components constructed of sheet metal framing	1.23	1.17	Outdoor	35.00	4.00	2.00	4.00	No	**-65 lb**	**131 lb**
ERV	4.65	6.00	5.83	Air-side HVACR, fans, air handles, air conditioning units, cabinet heaters, air distribution boxes, and other mechanical components constructed of sheet metal framing	2.20	0.00	Outdoor	35.00	4.00	2.00	4.00	No	**73 lb**	**215 lb**
VRF-R-4	5.50	3.45	1.67	Spring-isolated components and systems and vibration-isolated floors closely restrained using built-in or separate elastomeric snubbing devices or resilient perimeter stops	0.44	0.00	Outdoor	35.00	4.00	2.00	4.00	No	**-376 lb**	**129 lb**
HANGING ERV (W ISOLATOR)	2.00	3.40	3.30	Components and systems isolated using neoprene elements and neoprene isolated floors with built-in or separate elastomeric snubbing devices or resilient perimeter stops	0.25	4.00	Indoor	35.00	4.00	2.00	4.00	Yes	**-327 lb**	**117 lb**
HANGING ERV (WO ISOLATOR)	2.00	3.40	3.30	Air coolers (fin fans), air-cooled heat exchangers, condensing units, dry coolers, remote radiators and other mechanical components elevated on integral structural steel or sheet metal supports	0.25	4.00	Indoor	35.00	4.00	2.00	4.00	Yes	**-194 lb**	**73 lb**
EF-B-1	2.20	2.20	2.20	Components and systems isolated using neoprene elements and neoprene isolated floors with built-in or separate elastomeric snubbing devices or resilient perimeter stops	0.11	4.00	Indoor	35.00	4.00	2.00	4.00	Yes	**-227 lb**	**52 lb**
VHP-C-1	1.50	4.50	3.67	Air-side HVACR, fans, air handles, air conditioning units, cabinet heaters, air distribution boxes, and other mechanical components constructed of sheet metal framing	0.23	4.00	Indoor	35.00	4.00	2.00	4.00	Yes	**-91 lb**	**45 lb**

Wind

98	MPH		
k_z	0.73		Velocity pressure exposure coeff Table 26.10-1
k_{zt}	0.8		Topographic factor 26.8-1
k_d	0.85		Wind directionality factor Table 26.6
k_e	1.00		Ground Elevation Factor, Table 26.9-1
q_z	11.6	psf	Velocity Pressure, ASCE 7 EQ 26.10-1
GC_{pi}		0.85	Internal Pressure 26.13-1
$P_{internal}$		5	Internal Pressure 26.13-1

Wind (Horizontal Resultant Lateral Force) [ASCE 7: 29.4.1]

F_h	$q_z(GC_r)A_f$	Eq. 29.4-2
q_z :	11.6	psf
GC_r :	1.9	
F_h : 1	**22.0**	**psf**

Wind Parameters

Exposure Class	B
Height of building (ft)	35

Wind (Vertical)

F_v	$q_h(GC_r)A_f$	Eq. 29.4-3
q_h	11.6	psf
GC_r	1.5	
F_v	**17.4**	**psf**

Seismic Parameters

SDC	D
S_{DS}	1.116
I_e	1

FOOTNOTE:
NOTE [1] Omega (Overstrength) applies when unit is being attached to concrete or CMU. Omega need not apply if unit is attiched to wood or steel.

Copyright July 2023 D'Amato Conversano Inc. All Rights Reserved. This Document and the ideas and designs herein may not be used, in whole or in part, without prior written permission from D'Amato Conversano Inc. D'Amato Conversano Inc. disclaims any responsibility for the for its unauthorized use.

Project # : 24011-0016 Page # :
Proj. Name : Sunbreak Mechanical Anchorage
Engineer : MSS Date : 5/29/2025
Subject : VRF

Seismic Design Requirements for Nonstructural Components - ASCE 7-16 Chapter 13

Design: ASD
Equipment: VRF

Cabinet Geometry:

H_{eq} =	6.0 ft	Overall height
h_s =	3.0 ft	Seis. Centroid = From Submittal
h_w =	3.0 ft	Wind Centroid = 1/2(H_tot)
D =	2.44 ft	Dist between attachment
N =	4	Attachments supporting weight
N_{OT} =	2	Attachments resisting OT
N_v=	4	

Weight
Wp (VRF) 1.36 kip

Wind Load
Wind Pressure= 22.0 psf
Wind Width= 4.1 ft
Wind Load= 0.54 kip
Center of Wind 3.000
Wind Suction 0.17 kip

Seismic Coefficients

SDC =	D	Seismic Design Category
S_{DS} =	1.12	Design spectral acceleration
a_p =	2.50	ASCE 7-16 - Table 13.5-1 or 13.6-1
R_p =	2.00	ASCE 7-16 - Table 13.5-1 or 13.6-2
I_e =	1.00	Component Importance
Ω_p	1.00	
z =	35.0 ft	Height of Unit
h =	35.0 ft	Height of building

Seismic Calculations

$$F_{p,calc} = \frac{0.4 * a_p * S_{DS} * W_p}{R_p / I_p}\left(1 + 2\frac{z}{h}\right) \qquad F_{p,calc} = 2.28 \text{ kips} \quad \text{Equation 13.3-1}$$

$$F_{p,max} = 1.6 * S_{DS} * I_p * W_p \qquad F_{p,max} = 2.43 \text{ kips} \quad \text{Equation 13.3-2}$$

$$F_{p,min} = 0.3 * S_{DS} * I_p * W_p \qquad F_{p,min} = 0.46 \text{ kips} \quad \text{Equation 13.3-3}$$

$F_{p,temp}$ 1.67 W_p

Fp Seismic	**F_p = 2.28 kips**
Fp Wind	**F_p = 0.54 kips**

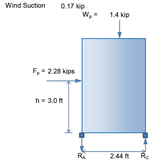

Wind Uplift at anchor -0.04 kips

Reactions

N =	(4)	Attachments supporting weight
N_{OT} =	(2)	Attachments resisting OT
N_v=	(4)	Attachments resisting shear

Lateral Load in the X-direction
(+ value equal compression)

	Point A	Point C	
Dead	+ 0.34 kip	+ 0.34 kip	$R_v = W_p / N$
Wind	- 0.33 kip	+ 0.33 kip	$R_v = (-Wind\ Load) * h / D / N_{OT}$
Seismic	- 1.40 kip	+ 1.40 kip	$R_v = (-F_p)* h / D / N_{OT}$
Seismic w/ Ω	- 1.40 kip	+ 1.40 kip	$R_v = \Omega(-F_p)* h / D / N_{OT}$
Int. Pressure	+ 0.12 kip	- 0.12 kip	R_v = 5psf * (H_{tot})* (wind width) / 1000

Ev = 0.2(Sds)(D)

ASD	Max EQ	-0.59 kips	1.37 kips	1.0D+0.7Ev+0.7Eh
	Min EQ	-0.83 kips	1.13 kips	0.6D-0.7Ev+0.7Eh
	Max Wind	0.11 kips	0.54 kips	D+0.6W
	Min Wind	-0.02 kips	0.40 kips	0.6D+0.6W
	Int. Pressure	0.12 kips	-0.12 kips	1.0 * Int.P
LRFD	Max EQ	-0.92 kips	1.88 kips	1.2D+Ev+Eh
	Min EQ	-1.17 kips	1.63 kips	0.9D-Ev+Eh
	Max Wind	0.03 kips	0.74 kips	1.2D+1.0W
	Min Wind	-0.07 kips	0.64 kips	0.9D+1.0W
	Int. Pressure	0.20 kips	-0.20 kips	1.6 * Int.P

	Tension	Compression	Shear	
Max Loads	**-0.83 kips**	**1.37 kips**	**0.40 kips**	**ASD**

SHEET NOTES

THE INFORMATION PROVIDED ON THIS SHEET HAS BEEN ENGINEERED BY A WASHINGTON STATE LICENSED STRUCTURAL ENGINEER AS INDICATED BY THE STAMP AND SIGNATURE OF THE LICENSEE FOR THIS PROJECT. ALL INFORMATION PROVIDED IS THE RESPONSIBILITY OF THAT LICENSEE.

FOR STAMP AND SIGNATURE OF LICENSED STRUCTURAL ENGINEER RESPONSIBLE FOR THE CALCULATIONS ON THIS SHEET, SEE SHEET M6.02

3700 E MERCER WAY
BARNABIE POINT

NO.	DATE	DESCRIPTION
3	12/15/25	100% CONSTRUCTION DOCS
2	08/25/25	90% CONSTRUCTION DOCS
1	06/04/25	BUILDING PERMIT

4 JUNE 2025

BUILDING PERMIT

PROJECT: 64605

STRUCTURAL CALCULATIONS

M6.02

ORIGINAL SHEET SIZE: 24" X 36"

ALL RIGHTS RESERVED: THESE DRAWINGS BELONG IN ANY FORM TO HOLADAY-PARKS, INC. NO PART OF THIS DOCUMENT MAY BE REPRODUCED IN ANY FORM OR BY ANY MEANS WITHOUT PERMISSION IN WRITING FROM HOLADAY PARKS, INC.

Project # : 24011-0016 Page # :
Proj. Name : Sunbreak Mechanical Anchorage
Engineer : MSS Date : 5/29/2025
Subject : RTU

Seismic Design Requirements for Nonstructural Components - ASCE 7-16 Chapter 13

Design ASD
Equipment: RTU

Cabinet Geometry:

H_{ot} =	5.4 ft	Overall height
h_cg =	3.3 ft	Seis. Centroid = From Submittal
h_cw =	2.7 ft	Wind Centroid = 1/2(H_tot)
D =	4.2 ft	Dist between attachment
N =	4	Attachments supporting weight
N_{OT} =	2	Attachments resisting OT
N_a=	4	

Weight

Wp (VRF) 1.23 kip

Wind Load

Wind Pressure=	22.0 psf
Wind Width=	7.33 ft
Wind Load=	0.87 kip
Center of Wind	2.709
Wind Suction	0.54 kip

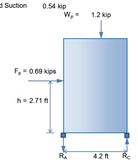

Wind Uplift at anchor: -0.13 kips

Seismic Coefficients

SDC =	D	Seismic Design Category
S_{DS} =	1.12	Design spectral acceleration
a_p =	2.50	ASCE 7-16 - Table 13.5-1 or 13.6-1
R_p =	6.00	ASCE 7-16 - Table 13.5-1 or 13.6-2
I_p =	1.00	Component Importance
Ω_p	1.00	
z =	35.0 ft	Height of Unit
h =	35.0 ft	Height of building

Seismic Calculations

$$F_{p,calc} = \frac{0.4 * a_p * S_{DS} * W_p}{R_p / I_p}\left(1 + 2\frac{z}{h}\right)$$ $F_{p,calc}$ = 0.69 kips, Equation 13.3-1

$$F_{p,max} = 1.6 * S_{DS} * I_p * W_p$$ $F_{p,max}$ = 2.20 kips, Equation 13.3-2

$$F_{p,min} = 0.3 * S_{DS} * I_p * W_p$$ $F_{p,min}$ = 0.41 kips, Equation 13.3-3

$F_{p,design}$ 0.56 W_p

Fp Seismic	**F_p = 0.69 kips**
Fp Wind	**F_p = 0.87 kips**

Reactions

N =	(4)	Attachments supporting weight
N_{OT} =	(2)	Attachments resisting OT
N_a=	(4)	Attachments resisting shear

Lateral Load in the X-direction
(+ value equal compression)

	Point A	Point C	
Dead	+ 0.31 kip	+ 0.31 kip	R_x = W_p / N
Wind	- 0.28 kip	+ 0.28 kip	R_x = (-Wind Load) * h / D / N_{OT}
Seismic	- 0.22 kip	+ 0.22 kip	R_x =(-F_p)* h / D / N_{OT}
Seismic w/ Ω	- 0.22 kip	+ 0.22 kip	R_x =2*(-F_p)* h / D / N_{OT}
Int. Pressure	+ 0.20 kip	- 0.20 kip	R_x = Spsf * (H_{ot})* (wind width) / 1000

Ev = 0.2(Sds)(D)

ASD

Max EQ	0.20 kips	0.51 kips	1.0D+0.7Ev+0.7Eh
Min EQ	-0.02 kips	0.29 kips	0.6D-0.7Ev+0.7Eh
Max Wind	0.06 kips	0.48 kips	D+0.6W
Min Wind	-0.07 kips	0.35 kips	0.6D+0.6W
Int. Pressure	0.20 kips	-0.20 kips	1.0 * Int.P

LRFD

Max EQ	0.22 kips	0.66 kips	1.2D+Ev+Eh
Min EQ	-0.01 kips	0.43 kips	0.9D-Ev+Eh
Max Wind	-0.05 kips	0.65 kips	1.2D+1.0W
Min Wind	-0.14 kips	0.56 kips	0.9D+1.0W
Int. Pressure	0.32 kips	-0.32 kips	1.6 * Int.P

Max Loads	Tension	Compression	Shear	ASD
	-0.07 kips	0.51 kips	0.13 kips	

Project # : 24011-0016 Page # :
Proj. Name : Sunbreak Mechanical Anchorage
Engineer : MSS Date : 5/29/2025
Subject : ERV

Seismic Design Requirements for Nonstructural Components - ASCE 7-16 Chapter 13

Design ASD
Equipment: ERV

Cabinet Geometry:

H_{ot} =	4.7 ft	Overall height
h_cg =	2.3 ft	Seis. Centroid = From Submittal
h_cw =	2.3 ft	Wind Centroid = 1/2(H_tot)
D =	5.83 ft	Dist between attachment
N =	4	Attachments supporting weight
N_{OT} =	2	Attachments resisting OT
N_a=	4	

Weight

Wp (VRF) 2.20 kip

Wind Load

Wind Pressure=	22.0 psf
Wind Width=	6.0 ft
Wind Load=	0.61 kip
Center of Wind	2.325
Wind Suction	0.61 kip

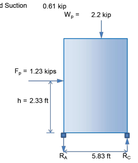

Wind Uplift at anchor: -0.15 kips

Seismic Coefficients

SDC =	D	Seismic Design Category
S_{DS} =	1.12	Design spectral acceleration
a_p =	2.50	ASCE 7-16 - Table 13.5-1 or 13.6-1
R_p =	6.00	ASCE 7-16 - Table 13.5-1 or 13.6-2
I_p =	1.00	Component Importance
Ω_p	1.00	
z =	35.0 ft	Height of Unit
h =	35.0 ft	Height of building

Seismic Calculations

$$F_{p,calc} = \frac{0.4 * a_p * S_{DS} * W_p}{R_p / I_p}\left(1 + 2\frac{z}{h}\right)$$ $F_{p,calc}$ = 1.23 kips, Equation 13.3-1

$$F_{p,max} = 1.6 * S_{DS} * I_p * W_p$$ $F_{p,max}$ = 3.93 kips, Equation 13.3-2

$$F_{p,min} = 0.3 * S_{DS} * I_p * W_p$$ $F_{p,min}$ = 0.74 kips, Equation 13.3-3

$F_{p,design}$ 0.56 W_p

Fp Seismic	**F_p = 1.23 kips**
Fp Wind	**F_p = 0.61 kips**

Reactions

N =	(4)	Attachments supporting weight
N_{OT} =	(2)	Attachments resisting OT
N_a=	(4)	Attachments resisting shear

Lateral Load in the X-direction
(+ value equal compression)

	Point A	Point C	
Dead	+ 0.55 kip	+ 0.55 kip	R_x = W_p / N
Wind	- 0.12 kip	+ 0.12 kip	R_x = (-Wind Load) * h / D / N_{OT}
Seismic	- 0.24 kip	+ 0.24 kip	R_x =(-F_p)* h / D / N_{OT}
Seismic w/ Ω	- 0.24 kip	+ 0.24 kip	R_x =2*(-F_p)* h / D / N_{OT}
Int. Pressure	+ 0.14 kip	- 0.14 kip	R_x = Spsf * (H_{ot})* (wind width) / 1000

Ev = 0.2(Sds)(D)

ASD

Max EQ	0.46 kips	0.81 kips	1.0D+0.7Ev+0.7Eh
Min EQ	0.07 kips	0.42 kips	0.6D-0.7Ev+0.7Eh
Max Wind	0.39 kips	0.62 kips	D+0.6W
Min Wind	0.17 kips	0.40 kips	0.6D+0.6W
Int. Pressure	0.14 kips	-0.14 kips	1.0 * Int.P

LRFD

Max EQ	0.54 kips	1.03 kips	1.2D+Ev+Eh
Min EQ	0.13 kips	0.62 kips	0.9D-Ev+Eh
Max Wind	0.39 kips	0.78 kips	1.2D+1.0W
Min Wind	0.22 kips	0.62 kips	0.9D+1.0W
Int. Pressure	0.22 kips	-0.22 kips	1.6 * Int.P

Max Loads	Tension	Compression	Shear	ASD
	0.07 kips	0.81 kips	0.21 kips	

Project # : 24011-0016 Page # :
Proj. Name : Sunbreak Mechanical Anchorage
Engineer : MSS Date : 5/29/2025
Subject : VRF-R-4

Seismic Design Requirements for Nonstructural Components - ASCE 7-16 Chapter 13

Design ASD
Equipment: VRF-R-4

Cabinet Geometry:

H_{ot} =	5.5 ft	Overall height
h_cg =	2.8 ft	Seis. Centroid = From Submittal
h_cw =	2.8 ft	Wind Centroid = 1/2(H_tot)
D =	1.67 ft	Dist between attachment
N =	4	Attachments supporting weight
N_{OT} =	2	Attachments resisting OT
N_a=	4	

Weight

Wp (VRF) 0.44 kip

Wind Load

Wind Pressure=	22.0 psf
Wind Width=	3.45 ft
Wind Load=	0.42 kip
Center of Wind	2.750
Wind Suction	0.10 kip

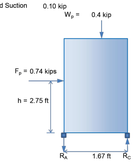

Wind Uplift at anchor: -0.03 kips

Seismic Coefficients

SDC =	D	Seismic Design Category
S_{DS} =	1.12	Design spectral acceleration
a_p =	2.50	ASCE 7-16 - Table 13.5-1 or 13.6-1
R_p =	2.00	ASCE 7-16 - Table 13.5-1 or 13.6-2
I_p =	1.00	Component Importance
Ω_p	1.00	
z =	35.0 ft	Height of Unit
h =	35.0 ft	Height of building

Seismic Calculations

$$F_{p,calc} = \frac{0.4 * a_p * S_{DS} * W_p}{R_p / I_p}\left(1 + 2\frac{z}{h}\right)$$ $F_{p,calc}$ = 0.74 kips, Equation 13.3-1

$$F_{p,max} = 1.6 * S_{DS} * I_p * W_p$$ $F_{p,max}$ = 0.79 kips, Equation 13.3-2

$$F_{p,min} = 0.3 * S_{DS} * I_p * W_p$$ $F_{p,min}$ = 0.15 kips, Equation 13.3-3

$F_{p,design}$ 1.67 W_p

Fp Seismic	**F_p = 0.74 kips**
Fp Wind	**F_p = 0.42 kips**

Reactions

N =	(4)	Attachments supporting weight
N_{OT} =	(2)	Attachments resisting OT
N_a=	(4)	Attachments resisting shear

Lateral Load in the X-direction
(+ value equal compression)

	Point A	Point C	
Dead	+ 0.11 kip	+ 0.11 kip	R_x = W_p / N
Wind	- 0.34 kip	+ 0.34 kip	R_x = (-Wind Load) * h / D / N_{OT}
Seismic	- 0.61 kip	+ 0.61 kip	R_x =(-F_p)* h / D / N_{OT}
Seismic w/ Ω	- 0.61 kip	+ 0.61 kip	R_x =2*(-F_p)* h / D / N_{OT}
Int. Pressure	+ 0.09 kip	- 0.09 kip	R_x = Spsf * (H_{ot})* (wind width) / 1000

Ev = 0.2(Sds)(D)

ASD

Max EQ	-0.30 kips	0.55 kips	1.0D+0.7Ev+0.7Eh
Min EQ	-0.38 kips	0.47 kips	0.6D-0.7Ev+0.7Eh
Max Wind	-0.11 kips	0.32 kips	D+0.6W
Min Wind	-0.16 kips	0.27 kips	0.6D+0.6W
Int. Pressure	0.09 kips	-0.09 kips	1.0 * Int.P

LRFD

Max EQ	-0.45 kips	0.76 kips	1.2D+Ev+Eh
Min EQ	-0.53 kips	0.68 kips	0.9D-Ev+Eh
Max Wind	-0.24 kips	0.48 kips	1.2D+1.0W
Min Wind	-0.27 kips	0.44 kips	0.9D+1.0W
Int. Pressure	0.15 kips	-0.15 kips	1.6 * Int.P

Max Loads	Tension	Compression	Shear	ASD
	-0.38 kips	0.55 kips	0.13 kips	

Project # : 24011-0016 Page # :
Proj. Name : Sunbreak Mechanical Anchorage
Engineer : MSS Date : 5/29/2025
Subject : HANGING ERV (W ISOLATOR)

Seismic Design Requirements for Nonstructural Components - ASCE 7-16 Chapter 13

Design ASD
Equipment: HANGING ERV (W ISOLATOR)

Cabinet Geometry:

H_{ot} =	6.0 ft	Overall height
h_cg =	5.0 ft	Seis. Centroid = From Submittal
h_cw =	3.0 ft	Wind Centroid = 1/2(H_tot)
D =	3.3 ft	Dist between attachment
N =	4	Attachments supporting weight
N_{OT} =	2	Attachments resisting OT
N_a=	4	

Weight

Wp (VRF) 0.25 kip

Wind Load

Wind Pressure=	5.0 psf
Wind Width=	3.4 ft
Wind Load=	0.10 kip
Center of Wind	3.000
Wind Suction	0.20 kip

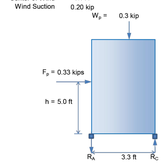

Wind Uplift at anchor: -0.05 kips

Seismic Coefficients

SDC =	D	Seismic Design Category
S_{DS} =	1.12	Design spectral acceleration
a_p =	2.50	ASCE 7-16 - Table 13.5-1 or 13.6-1
R_p =	2.50	ASCE 7-16 - Table 13.5-1 or 13.6-2
I_p =	1.00	Component Importance
Ω_p	2.00	
z =	35.0 ft	Height of Unit
h =	35.0 ft	Height of building

Seismic Calculations

$$F_{p,calc} = \frac{0.4 * a_p * S_{DS} * W_p}{R_p / I_p}\left(1 + 2\frac{z}{h}\right)$$ $F_{p,calc}$ = 0.33 kips, Equation 13.3-1

$$F_{p,max} = 1.6 * S_{DS} * I_p * W_p$$ $F_{p,max}$ = 0.45 kips, Equation 13.3-2

$$F_{p,min} = 0.3 * S_{DS} * I_p * W_p$$ $F_{p,min}$ = 0.08 kips, Equation 13.3-3

$F_{p,design}$ 1.34 W_p

Fp Seismic	**F_p = 0.33 kips**
Fp Wind	**F_p = 0.10 kips**

Reactions

N =	(4)	Attachments supporting weight
N_{OT} =	(2)	Attachments resisting OT
N_a=	(4)	Attachments resisting shear

Lateral Load in the X-direction
(+ value equal compression)

	Point A	Point C	
Dead	+ 0.06 kip	+ 0.06 kip	R_x = W_p / N
Wind	- 0.08 kip	+ 0.08 kip	R_x = (-Wind Load) * h / D / N_{OT}
Seismic	- 0.25 kip	+ 0.25 kip	R_x =(-F_p)* h / D / N_{OT}
Seismic w/ Ω	- 0.51 kip	+ 0.51 kip	R_x =2*(-F_p)* h / D / N_{OT}
Int. Pressure	+ 0.10 kip	- 0.10 kip	R_x = Spsf * (H_{ot})* (wind width) / 1000

Ev = 0.2(Sds)(D)

ASD

Max EQ	-0.11 kips	0.25 kips	1.0D+0.7Ev+0.7Eh
Min EQ	-0.15 kips	0.21 kips	0.6D-0.7Ev+0.7Eh
Max Wind	-0.01 kips	0.11 kips	D+0.6W
Min Wind	-0.04 kips	0.08 kips	0.6D+0.6W
Int. Pressure	0.10 kips	-0.10 kips	1.0 * Int.P
Max EQ w/ Ω	-0.28 kips	0.43 kips	1.0D+0.7Ev+0.7Eh
Min EQ w/ Ω	-0.33 kips	0.38	0.6D-0.7Ev+0.7Eh

LRFD

Max EQ	-0.16 kips	0.34 kips	1.2D+Ev+Eh
Min EQ	-0.21 kips	0.30 kips	0.9D-Ev+Eh
Max Wind	-0.05 kips	0.15 kips	1.2D+1.0W
Min Wind	-0.07 kips	0.13 kips	0.9D+1.0W
Int. Pressure	0.16 kips	-0.16 kips	1.6 * Int.P
Max EQ w/ Ω	-0.42 kips	0.60 kips	1.2D+Ev+Eh
Min EQ w/ Ω	-0.46 kips	0.55 kips	0.9D-Ev+Eh

Max Loads	Tension	Compression	Shear	ASD
	-0.15 kips	0.25 kips	0.06 kips	
Ω_p Loads	-0.33 kips	0.43 kips	0.12 kips	

Project # : 24011-0016 Page # :
Proj. Name : Sunbreak Mechanical Anchorage
Engineer : MSS Date : 5/29/2025
Subject : HANGING ERV (WO ISOLATOR)

Seismic Design Requirements for Nonstructural Components - ASCE 7-16 Chapter 13

Design ASD
Equipment: HANGING ERV (WO ISOLATOR)

Cabinet Geometry:

H_{ot} =	6.0 ft	Overall height
h_cg =	5.0 ft	Seis. Centroid = From Submittal
h_cw =	3.0 ft	Wind Centroid = 1/2(H_tot)
D =	3.3 ft	Dist between attachment
N =	4	Attachments supporting weight
N_{OT} =	2	Attachments resisting OT
N_a=	4	

Weight

Wp (VRF) 0.25 kip

Wind Load

Wind Pressure=	5.0 psf
Wind Width=	3.4 ft
Wind Load=	0.10 kip
Center of Wind	3.000
Wind Suction	0.20 kip

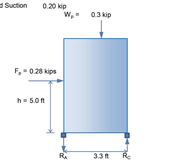

Wind Uplift at anchor: -0.05 kips

Seismic Coefficients

SDC =	D	Seismic Design Category
S_{DS} =	1.12	Design spectral acceleration
a_p =	2.50	ASCE 7-16 - Table 13.5-1 or 13.6-1
R_p =	3.00	ASCE 7-16 - Table 13.5-1 or 13.6-2
I_p =	1.00	Component Importance
Ω_p	1.50	
z =	35.0 ft	Height of Unit
h =	35.0 ft	Height of building

Seismic Calculations

$$F_{p,calc} = \frac{0.4 * a_p * S_{DS} * W_p}{R_p / I_p}\left(1 + 2\frac{z}{h}\right)$$ $F_{p,calc}$ = 0.28 kips, Equation 13.3-1

$$F_{p,max} = 1.6 * S_{DS} * I_p * W_p$$ $F_{p,max}$ = 0.45 kips, Equation 13.3-2

$$F_{p,min} = 0.3 * S_{DS} * I_p * W_p$$ $F_{p,min}$ = 0.08 kips, Equation 13.3-3

$F_{p,design}$ 1.12 W_p

Fp Seismic	**F_p = 0.28 kips**
Fp Wind	**F_p = 0.10 kips**

Reactions

N =	(4)	Attachments supporting weight
N_{OT} =	(2)	Attachments resisting OT
N_a=	(4)	Attachments resisting shear

Lateral Load in the X-direction
(+ value equal compression)

	Point A	Point C	
Dead	+ 0.06 kip	+ 0.06 kip	R_x = W_p / N
Wind	- 0.08 kip	+ 0.08 kip	R_x = (-Wind Load) * h / D / N_{OT}
Seismic	- 0.21 kip	+ 0.21 kip	R_x =(-F_p)* h / D / N_{OT}
Seismic w/ Ω	- 0.32 kip	+ 0.32 kip	R_x =2*(-F_p)* h / D / N_{OT}
Int. Pressure	+ 0.10 kip	- 0.10 kip	R_x = Spsf * (H_{ot})* (wind width) / 1000

Ev = 0.2(Sds)(D)

ASD

Max EQ	-0.08 kips	0.22 kips	1.0D+0.7Ev+0.7Eh
Min EQ	-0.12 kips	0.18 kips	0.6D-0.7Ev+0.7Eh
Max Wind	-0.01 kips	0.11 kips	D+0.6W
Min Wind	-0.04 kips	0.08 kips	0.6D+0.6W
Int. Pressure	0.10 kips	-0.10 kips	1.0 * Int.P
Max EQ w/ Ω	-0.15 kips	0.29 kips	1.0D+0.7Ev+0.7Eh
Min EQ w/ Ω	-0.19 kips	0.25	0.6D-0.7Ev+0.7Eh

LRFD

Max EQ	-0.12 kips	0.30 kips	1.2D+Ev+Eh
Min EQ	-0.17 kips	0.25 kips	0.9D-Ev+Eh
Max Wind	-0.05 kips	0.15 kips	1.2D+1.0W
Min Wind	-0.07 kips	0.13 kips	0.9D+1.0W
Int. Pressure	0.16 kips	-0.16 kips	1.6 * Int.P
Max EQ w/ Ω	-0.23 kips	0.41 kips	1.2D+Ev+Eh
Min EQ w/ Ω	-0.27 kips	0.36 kips	0.9D-Ev+Eh

Max Loads	Tension	Compression	Shear	ASD
	-0.12 kips	0.22 kips	0.05 kips	
Ω_p Loads	-0.19 kips	0.29 kips	0.07 kips	

Project # : 24011-0016 Page # :
Proj. Name : Sunbreak Mechanical Anchorage
Engineer : MSS Date : 5/29/2025
Subject : EF-B-1

Seismic Design Requirements for Nonstructural Components - ASCE 7-16 Chapter 13

Design ASD
Equipment: EF-B-1

Cabinet Geometry:

H_{ot} =	6.2 ft	Overall height
h_cg =	5.1 ft	Seis. Centroid = From Submittal
h_cw =	3.1 ft	Wind Centroid = 1/2(H_tot)
D =	2.2 ft	Dist between attachment
N =	4	Attachments supporting weight
N_{OT} =	2	Attachments resisting OT
N_a=	4	

Weight

Wp (VRF) 0.11 kip

Wind Load

Wind Pressure=	5.0 psf
Wind Width=	2.2 ft
Wind Load=	0.07 kip
Center of Wind	3.100
Wind Suction	0.08 kip

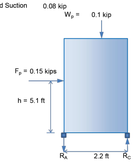

Wind Uplift at anchor: -0.02 kips

Seismic Coefficients

SDC =	D	Seismic Design Category
S_{DS} =	1.12	Design spectral acceleration
a_p =	2.50	ASCE 7-16 - Table 13.5-1 or 13.6-1
R_p =	2.50	ASCE 7-16 - Table 13.5-1 or 13.6-2
I_p =	1.00	Component Importance
Ω_p	2.00	
z =	35.0 ft	Height of Unit
h =	35.0 ft	Height of building

Seismic Calculations

$$F_{p,calc} = \frac{0.4 * a_p * S_{DS} * W_p}{R_p / I_p}\left(1 + 2\frac{z}{h}\right)$$ $F_{p,calc}$ = 0.15 kips, Equation 13.3-1

$$F_{p,max} = 1.6 * S_{DS} * I_p * W_p$$ $F_{p,max}$ = 0.20 kips, Equation 13.3-2

$$F_{p,min} = 0.3 * S_{DS} * I_p * W_p$$ $F_{p,min}$ = 0.04 kips, Equation 13.3-3

$F_{p,design}$ 1.34 W_p

Fp Seismic	**F_p = 0.15 kips**
Fp Wind	**F_p = 0.07 kips**

Reactions

N =	(4)	Attachments supporting weight
N_{OT} =	(2)	Attachments resisting OT
N_a=	(4)	Attachments resisting shear

Lateral Load in the X-direction
(+ value equal compression)

	Point A	Point C	
Dead	+ 0.03 kip	+ 0.03 kip	R_x = W_p / N
Wind	- 0.08 kip	+ 0.08 kip	R_x = (-Wind Load) * h / D / N_{OT}
Seismic	- 0.17 kip	+ 0.17 kip	R_x =(-F_p)* h / D / N_{OT}
Seismic w/ Ω	- 0.34 kip	+ 0.34 kip	R_x =2*(-F_p)* h / D / N_{OT}
Int. Pressure	+ 0.07 kip	- 0.07 kip	R_x = Spsf * (H_{ot})* (wind width) / 1000

Ev = 0.2(Sds)(D)

ASD

Max EQ	-0.09 kips	0.15 kips	1.0D+0.7Ev+0.7Eh
Min EQ	-0.11 kips	0.13 kips	0.6D-0.7Ev+0.7Eh
Max Wind	-0.03 kips	0.07 kips	D+0.6W
Min Wind	-0.04 kips	0.06 kips	0.6D+0.6W
Int. Pressure	0.07 kips	-0.07 kips	1.0 * Int.P
Max EQ w/ Ω	-0.21 kips	0.27 kips	1.0D+0.7Ev+0.7Eh
Min EQ w/ Ω	-0.23 kips	0.25	0.6D-0.7Ev+0.7Eh

LRFD

Max EQ	-0.13 kips	0.21 kips	1.2D+Ev+Eh
Min EQ	-0.15 kips	0.19 kips	0.9D-Ev+Eh
Max Wind	-0.07 kips	0.11 kips	1.2D+1.0W
Min Wind	-0.08 kips	0.10 kips	0.9D+1.0W
Int. Pressure	0.11 kips	-0.11 kips	1.6 * Int.P
Max EQ w/ Ω	-0.30 kips	0.38 kips	1.2D+Ev+Eh
Min EQ w/ Ω	-0.32 kips	0.36 kips	0.9D-Ev+Eh

Max Loads	Tension	Compression	Shear	ASD
	-0.11 kips	0.15 kips	0.03 kips	
Ω_p Loads	-0.23 kips	0.27 kips	0.05 kips	

SHEET NOTES

THE INFORMATION PROVIDED ON THIS SHEET HAS BEEN ENGINEERED BY A WASHINGTON STATE LICENSED STRUCTURAL ENGINEER AS INDICATED BY THE STAMP AND SIGNATURE OF THE LICENSEE FOR THIS PROJECT. ALL INFORMATION PROVIDED IS THE RESPONSIBILITY OF THAT LICENSEE.

FOR STAMP AND SIGNATURE OF LICENSED STRUCTURAL ENGINEER RESPONSIBLE FOR THE CALCULATIONS ON THIS SHEET, SEE SHEET M6.02

HOLADAY-PARKS, INC.
SMART Mechanical Solutions©
Mechanical Solutions • Energy Services
Building Controls • Service & Maintenance
4600 S. 134TH PLACE
TUKWILA, WA 98168 • (206) 248-9700
HOLADAYPARKS.COM
WA LICENSE NUMBER: HOLADPI379N0

APPROVED FOR CONSTRUCTION

3700 E MERCER WAY
BARNABIE POINT

NO.	DATE	DESCRIPTION
3	12/15/25	100% CONSTRUCTION DOCS
2	08/25/25	90% CONSTRUCTION DOCS
1	06/04/25	BUILDING PERMIT

4 JUNE 2025

BUILDING PERMIT

PROJECT: 64605

STRUCTURAL CALCULATIONS

M6.03

ALL RIGHTS RESERVED: THESE DRAWINGS BELONG IN ANY FORM TO HOLADAY-PARKS, INC. NO PART OF THIS DOCUMENT MAY BE REPRODUCED IN ANY FORM OR BY ANY MEANS WITHOUT PERMISSION IN WRITING FROM HOLADAY PARKS, INC.

ORIGINAL SHEET SIZE: 24" X 36"

DCI ENGINEERS

Project # : 24011-0016 Page # :
Proj. Name : Sunbreak Mechanical Anchorage
Engineer : MSS Date : 5/29/2025
Subject : VHP-C-1

Seismic Design Requirements for Nonstructural Components - ASCE 7-16 Chapter 13

Design ASD
Equipment: VHP-C-1
Cabinet Geometry:

H_{eq} =	5.5 ft	Overall height
$h_{c}g$ =	4.8 ft	Seis. Centroid = From Submittal
$h_{c}w$ =	2.8 ft	Wind Centroid = 1/2(H_tot)
D =	3.67 ft	Dist between attachment
N =	4	Attachments supporting weight
N_{OT} =	2	Attachments resisting OT
N_v =	4	

Weight
Wp (VRF) 0.23 kip

Wind Load
Wind Pressure= 5.0 psf
Wind Width= 4.5 ft
Wind Load= 0.12 kip
Center of Wind 2.750
Wind Suction 0.29 kip

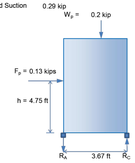

Wind Uplift at anchor -0.07 kips

Seismic Coefficients

SDC =	D	Seismic Design Category
S_{DS} =	1.12	Design spectral acceleration
a_p =	2.50	ASCE 7-16 - Table 13.5-1 or 13.6-1
R_p =	6.00	ASCE 7-16 - Table 13.5-1 or 13.6-2
I_p =	1.00	Component Importance
Ω_p	2.00	
z =	35.0 ft	Height of Unit
h =	35.0 ft	Height of building

Seismic Calculations

$$F_{p,calc} = \frac{0.4 * a_p * S_{DS} * W_p}{R_p / I_p}\left(1 + 2\frac{z}{h}\right)$$ $F_{p,calc}$ = 0.13 kips Equation 13.3-1

$$F_{p,max} = 1.6 * S_{DS} * I_p * W_p$$ $F_{p,max}$ = 0.41 kips Equation 13.3-2

$$F_{p,min} = 0.3 * S_{DS} * I_p * W_p$$ $F_{p,min}$ = 0.08 kips Equation 13.3-3

$F_{p,design}$ 0.56 W_p

Fp Seismic	**F_p = 0.13 kips**
Fp Wind	**F_p = 0.12 kips**

Reactions

N =	(4)	Attachments supporting weight
N_{OT} =	(2)	Attachments resisting OT
N_v=	(4)	Attachments resisting shear

Lateral Load in the X-direction
(+ value equal compression)

	Point A	Point C	
Dead	+ 0.06 kip	+ 0.06 kip	R_x = W_p / N
Wind	- 0.08 kip	+ 0.08 kip	R_x = (-Wind Load) * h / D / N_{OT}
Seismic	- 0.08 kip	+ 0.08 kip	R_x =(-F_p)* h / D / N_{OT}
Seismic w/ Ω	- 0.17 kip	+ 0.17 kip	R_x =Ω*(-F_p)* h / D / N_{OT}
Int. Pressure	+ 0.12 kip	-0.12 kip	R_x = Spsf * (H_{eq})* (wind width) / 1000

Ev = 0.2(Sds)(D)

ASD

Max EQ	0.01 kips	0.12 kips	1.0D+0.7Ev+0.7Eh	
Min EQ	-0.03 kips	0.08 kips	0.6D-0.7Ev+0.7Eh	
Max Wind	-0.03 kips	0.11 kips	D+0.6W	
Min Wind	-0.06 kips	0.08 kips	0.6D+0.6W	
Int. Pressure	0.12 kips	-0.12 kips	1.0 * Int.P	
Max EQ w/ Ω	-0.05 kips	0.18 kips	1.0D+0.7Ev+0.7Eh	
Min EQ w/ Ω	-0.09 kips	0.14	0.6D-0.7Ev+0.7Eh	

LRFD

Max EQ	0.00 kips	0.16 kips	1.2D+Ev+Eh
Min EQ	-0.04 kips	0.12 kips	0.9D-Ev+Eh
Max Wind	-0.08 kips	0.15 kips	1.2D+1.0W
Min Wind	-0.10 kips	0.13 kips	0.9D+1.0W
Int. Pressure	0.20 kips	-0.20 kips	1.6 * Int.P
Max EQ w/ Ω	-0.08 kips	0.25 kips	1.2D+Ev+Eh
Min EQ w/ Ω	-0.13 kips	0.21 kips	0.9D-Ev+Eh

	Tension	Compression	Shear	
Max Loads	**-0.03 kips**	**0.12 kips**	**0.02 kips**	**ASD**
Ω_v Loads	**-0.09 kips**	**0.18 kips**	**0.04 kips**	

DCI ENGINEERS

Project	BARNABIE POINT MECHANICAL	Project No.	25011-0215
		Sheet No.	
Subject	MECHANICAL UNIT ANCHORAGE	Date	05-30-2025
		By	MSS

RTU STRAP

Load at each attachment:
Pullout: 65 lbs
Shear: 131 lbs

Unit to Strap:
Shear allowable: 188(4) = 752 lbs > 131

USE #12 SMS SCREWS

HANGING UNIT ANCHORAGE:

PULLOUT = 327 lbs
SHEAR = Fp = 330 lbs

F allowable = Fy*Ag/1.67
F allowable = 2381 lbs

USE 3/8"DIA THRD ROD

T = Fp/cos(45) = 467#

467 lbs < 595 lbs

USE 3/16" GALV WIRE ROPE

ANCHOR
WORST CASE:
SHEAR = 330 lbs
PULLOUT = 330 lbs

FORCES ABOVE HAVE BEEN MULTIPLIED BY OVERSTRENGTH

USE 1/4"DIAx 3" DEWALT SCREW-BOLT+

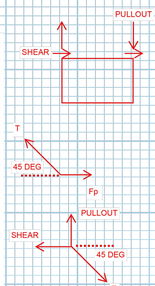

DEWALT DESIGN ASSIST 1.7.5.0 Page 1

DEWALT Anchor Design

5/29/2025

1.Project Information

Company:
Project Engineer:
Address:
Phone: M: P:
Email: mstraume@dci-engineers.com
Project Name: Untitled
Project Address: Untitled
Notes:

2.Selected Anchor Information

Selected Anchor : Screw-Bolt+
Brand: DEWALT
Material: 1/2" Ø Low Carbon Steel
Embedment: h_{ef} 2.17 in h_{nom} 3 in
Approval: ICC-ES ESR-3889
Issued/Revision: Nov,2024 -
Drill method: Hammer Drilled

3.Design Principles

Design Method: ACI 318-14
Load Combinations: Section 5.3 User Defined Loads
Seismic Loading: Tension 17.2.3.4.3(d) Shear 17.2.3.5.3(c)

4.Base Material Information

Concrete:
Type: Cracked Normal Weight Concrete Over Steel Deck Soffit Lower Flute
Strength 3000 psi
Reinforcement:
Spacing Tension No (Condition B) Shear No (Condition B)
Tension
Type: W 3-7/8" X 3"

Input data and results must be checked for agreement with the existing conditions, the standards and guidelines and must be checked for plausibility

DEWALT DESIGN ASSIST 1.7.5.0 Page 2

DEWALT Anchor Design

5/29/2025

5.Geometric Conditions

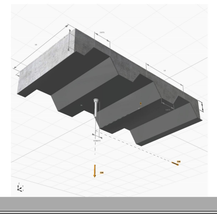

6.Summary Results

Tension Loading

Design Proof	Demand(lb)	Capacity(lb)	Utilization	Status	Critical
Steel Strength	330.000	13309.000	0.025	OK	
Pullout Strength	330.000	1136.000	0.291	OK	Controls

Shear Loading

Design Proof	Demand(lb)	Capacity(lb)	Utilization	Status	Critical
Steel Strength	330.000	1257.000	0.263	OK	Controls

Input data and results must be checked for agreement with the existing conditions, the standards and guidelines and must be checked for plausibility

DEWALT DESIGN ASSIST 1.7.5.0 Page 3

DEWALT Anchor Design

5/29/2025

7.Warnings and Remarks

ANCHOR DESIGN CRITERIA IS SATISFIED

- The results of the calculations carried out by means of the DDA Software are based essentially on the data you put in. Therefore, you bear the sole responsibility for the absence of errors, the completeness and the relevance of the data to be put in by you. Moreover, you bear sole responsibility for having the results of the calculation checked and cleared by an design professional/engineer, particularly with regard to compliance with applicable standards, norms and permits, prior to using them for your specific project. The DDA Software serves only as an aid to interpret standards, norms and permits without any guarantee as to the absence of errors, the correctness and the relevance of the results or suitability for a specific application.
- Calculations including seismic design requirements in accordance with ACI 318 are required for anchors in structures assigned to seismic design categories C, D, E and F.
- Under these seismic conditions, the direction of shear may not be predictable. In accordance with ACI 318 the full shear force should be assumed also in reverse direction for a safe design. Load reversal may influence the direction of the controlling concrete breakout strength.
- Base Material Strength: You have selected one or more inputs that are outside the input / boundary conditions for the selected anchors. Please see and review all program Validations and report Warnings and Remarks. Proceed with caution!

Input data and results must be checked for agreement with the existing conditions, the standards and guidelines and must be checked for plausibility

DEWALT DESIGN ASSIST 1.7.5.0 Page 4

DEWALT Anchor Design

5/29/2025

8.Load Condition

Design Loads / Actions

N_u 330 lb V_{ux} 0 lb V_{uy} 330 lb
M_{uz} 0 in-lb M_{ux} 0 in-lb M_{uy} 0 in-lb
Consider Load Reversal X Direction 100% Y Direction 100%

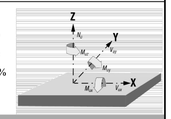

9.Load Distribution

Resulting anchor forces / Load distribution

Anchor	Tension Load	Shear Load	Component Shear Load Shear X	Shear y
1	330.00	330.0	0.0	330.0

Input data and results must be checked for agreement with the existing conditions, the standards and guidelines and must be checked for plausibility

ORIGINAL SHEET SIZE: 24" X 36"

HOLADAY-PARKS, INC.
SMART Mechanical Solutions©
Mechanical Solutions • Energy Services
Building Controls • Service & Maintenance
4600 S. 134TH PLACE
TUKWILA, WA 98168 • (206) 248-9700
HOLADAYPARKS.com
WA LICENSE NUMBER: HOLADPI379N0

APPROVED FOR CONSTRUCTION

3700 E MERCER WAY
BARNABIE POINT

NO.	DATE	DESCRIPTION
3	12/15/25	100% CONSTRUCTION DOCS
2	08/25/25	90% CONSTRUCTION DOCS
1	06/04/25	BUILDING PERMIT

4 JUNE 2025

BUILDING PERMIT

PROJECT: 64605

STRUCTURAL CALCULATIONS

M6.04

SHEET NOTES

THE INFORMATION PROVIDED ON THIS SHEET HAS BEEN ENGINEERED BY A WASHINGTON STATE LICENSED STRUCTURAL ENGINEER AS INDICATED BY THE STAMP AND SIGNATURE OF THE LICENSEE FOR THIS PROJECT. ALL INFORMATION PROVIDED IS THE RESPONSIBILITY OF THAT LICENSEE.

FOR STAMP AND SIGNATURE OF LICENSED STRUCTURAL ENGINEER RESPONSIBLE FOR THE CALCULATIONS ON THIS SHEET, SEE SHEET M6.02

ALL RIGHTS RESERVED: THESE DRAWINGS BELONG IN ANY FORM TO HOLADAY-PARKS, INC. NO PART OF THIS DOCUMENT MAY BE REPRODUCED IN ANY FORM OR BY ANY MEANS WITHOUT PERMISSION IN WRITING FROM HOLADAY PARKS, INC.

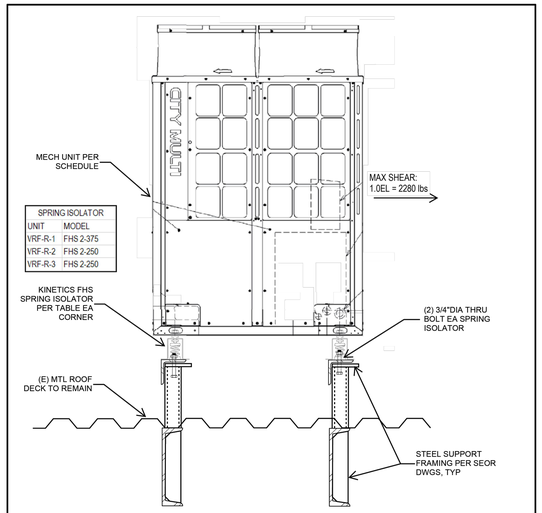

1 VRF ANCHORAGE TO STEEL FRAME
NOT TO SCALE

MECHANICAL UNIT SCHEDULE

UNIT	HEIGHT (IN)	LENGTH (IN)	WIDTH (IN)	WEIGHT (LBS
VRF-R-1	71	49	29	1360
VRF-R-2	71	69	29	895
VRF-R-3	71	69	29	895

© Copyright 05.2025 D'Amato Conversano Inc. All Rights Reserved
This document, and the ideas and designs may not be reused, in whole or in part, without written permission.
Non-DTinsight Conversano Inc. DTinsight Conversano Inc. disclaims any responsibility for its unauthorized use.

DCI engineers
818 Stewart Street, Suite 1000
Seattle, Washington 98101
P: (206) 332-1900 www.dci-engineers.com
CIVIL / STRUCTURAL

PROJECT NAME: BARNABIE POINT MECHANICAL
3700 E MERCER WAY MERCER ISLAND, WA 98040
DESCRIPTION: VRF anchorage to steel frame.

PROJECT NO: 25011-0215
DATE: 05.29.2025
BY: MSS
SHEET NO: SSK-01

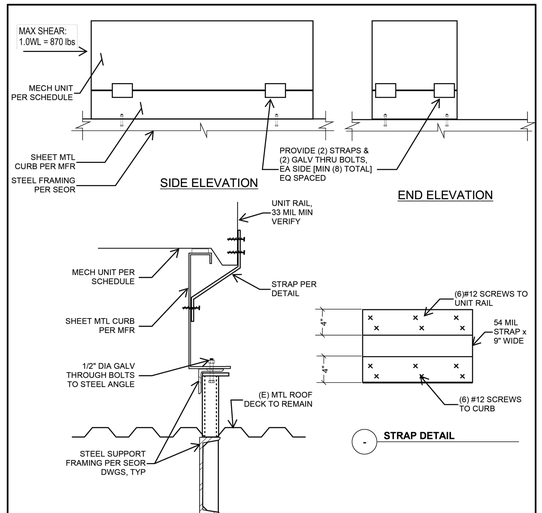

2 RTU-R ANCHORAGE TO STEEL FRAME
NOT TO SCALE

- STRAP DETAIL

MECHANICAL UNIT SCHEDULE

UNIT	HEIGHT (IN)	LENGTH (IN)	WIDTH (IN)	WEIGHT (LBS)
RTU-R-1	51	88	54	1130
RTU-R-2	47	70	45	885

© Copyright 05.2025 D'Amato Conversano Inc. All Rights Reserved
This document, and the ideas and designs may not be reused, in whole or in part, without written permission.
Non-DTinsight Conversano Inc. DTinsight Conversano Inc. disclaims any responsibility for its unauthorized use.

DCI engineers
818 Stewart Street, Suite 1000
Seattle, Washington 98101
P: (206) 332-1900 www.dci-engineers.com
CIVIL / STRUCTURAL

PROJECT NAME: BARNABIE POINT MECHANICAL
3700 E MERCER WAY MERCER ISLAND, WA 98040
DESCRIPTION: RTU-R anchorage to steel frame.

PROJECT NO: 25011-0215
DATE: 05.29.2025
BY: MSS
SHEET NO: SSK-02

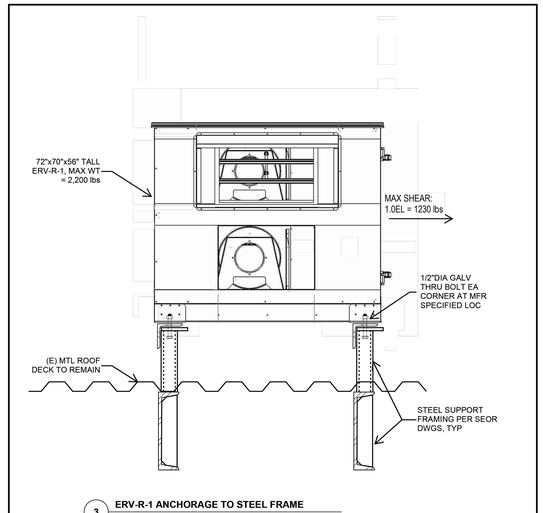

3 ERV-R-1 ANCHORAGE TO STEEL FRAME
NOT TO SCALE

© Copyright 05.2025 D'Amato Conversano Inc. All Rights Reserved
This document, and the ideas and designs may not be reused, in whole or in part, without written permission.
Non-DTinsight Conversano Inc. DTinsight Conversano Inc. disclaims any responsibility for its unauthorized use.

DCI engineers
818 Stewart Street, Suite 1000
Seattle, Washington 98101
P: (206) 332-1900 www.dci-engineers.com
CIVIL / STRUCTURAL

PROJECT NAME: BARNABIE POINT MECHANICAL
3700 E MERCER WAY MERCER ISLAND, WA 98040
DESCRIPTION: ERV-R-1 anchorage to steel frame.

PROJECT NO: 25011-0215
DATE: 05.29.2025
BY: MSS
SHEET NO: SSK-03

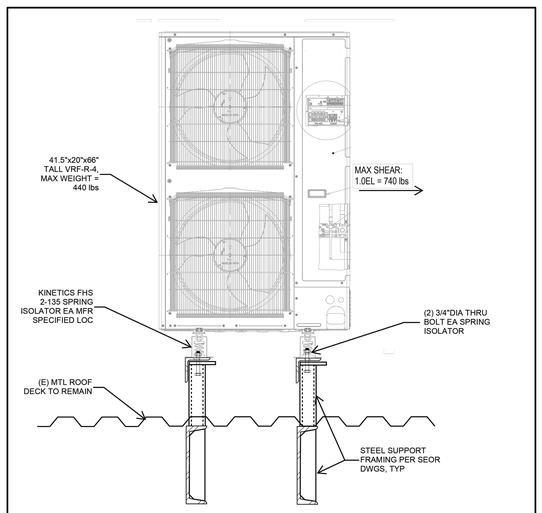

4 VRF-R-4 ANCHORAGE TO STEEL FRAME
NOT TO SCALE

© Copyright 05.2025 D'Amato Conversano Inc. All Rights Reserved
This document, and the ideas and designs may not be reused, in whole or in part, without written permission.
Non-DTinsight Conversano Inc. DTinsight Conversano Inc. disclaims any responsibility for its unauthorized use.

DCI engineers
818 Stewart Street, Suite 1000
Seattle, Washington 98101
P: (206) 332-1900 www.dci-engineers.com
CIVIL / STRUCTURAL

PROJECT NAME: BARNABIE POINT MECHANICAL
3700 E MERCER WAY MERCER ISLAND, WA 98040
DESCRIPTION: VRF-R-4 anchorage to steel frame.

PROJECT NO: 25011-0215
DATE: 05.29.2025
BY: MSS
SHEET NO: SSK-04

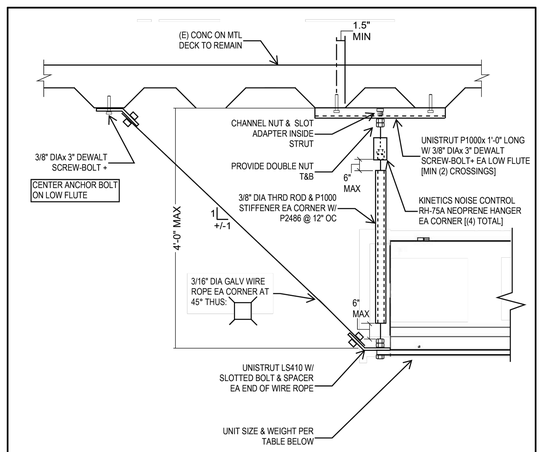

5 ERV W/ NEOPRENE HANGER ANCHORAGE
NOT TO SCALE

ERV SCHEDULE

UNIT	WEIGHT (LBS)
ERV-1-1	204
ERV-1-2	204
ERV-1-3	204
ERV-2-1	123
ERV-2-2	123
ERV-2-3	123
ERV-2-4	204
ERV-2-5	204

© Copyright 05.2025 D'Amato Conversano Inc. All Rights Reserved
This document, and the ideas and designs may not be reused, in whole or in part, without written permission.
Non-DTinsight Conversano Inc. DTinsight Conversano Inc. disclaims any responsibility for its unauthorized use.

DCI engineers
818 Stewart Street, Suite 1000
Seattle, Washington 98101
P: (206) 332-1900 www.dci-engineers.com
CIVIL / STRUCTURAL

PROJECT NAME: BARNABIE POINT MECHANICAL
3700 E MERCER WAY MERCER ISLAND, WA 98040
DESCRIPTION: ERV unit with neoprene hanger anchorage to concrete on metal deck.

PROJECT NO: 25011-0215
DATE: 05.29.2025
BY: MSS
SHEET NO: SSK-05

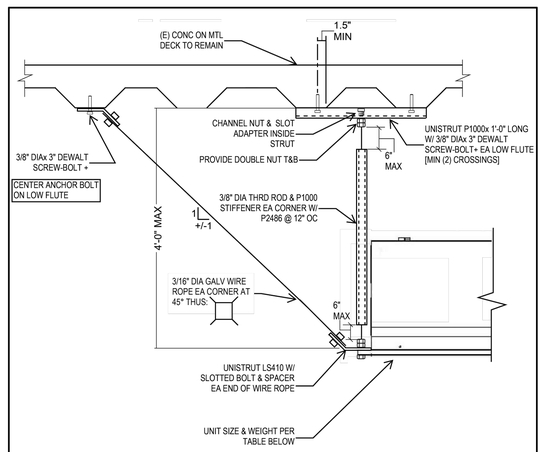

6 ERV W/O NEOPRENE HANGER ANCHORAGE
NOT TO SCALE

ERV SCHEDULE

UNIT	WEIGHT (LBS)
ERV-B-1	245
ERV-B-2	245
ERV-C-1	245

© Copyright 05.2025 D'Amato Conversano Inc. All Rights Reserved
This document, and the ideas and designs may not be reused, in whole or in part, without written permission.
Non-DTinsight Conversano Inc. DTinsight Conversano Inc. disclaims any responsibility for its unauthorized use.

DCI engineers
818 Stewart Street, Suite 1000
Seattle, Washington 98101
P: (206) 332-1900 www.dci-engineers.com
CIVIL / STRUCTURAL

PROJECT NAME: BARNABIE POINT MECHANICAL
3700 E MERCER WAY MERCER ISLAND, WA 98040
DESCRIPTION: ERV unit without neoprene hanger anchorage to concrete on metal deck.

PROJECT NO: 25011-0215
DATE: 05.29.2025
BY: MSS
SHEET NO: SSK-06

SHEET NOTES

THE INFORMATION PROVIDED ON THIS SHEET HAS BEEN ENGINEERED BY A WASHINGTON STATE LICENSED STRUCTURAL ENGINEER AS INDICATED BY THE STAMP AND SIGNATURE OF THE LICENSEE FOR THIS PROJECT. ALL INFORMATION PROVIDED IS THE RESPONSIBILITY OF THAT LICENSEE.

FOR STAMP AND SIGNATURE OF LICENSED STRUCTURAL ENGINEER RESPONSIBLE FOR THE CALCULATIONS ON THIS SHEET, SEE SHEET M6.02

ORIGINAL SHEET SIZE: 24" X 36"

HOLADAY-PARKS, INC.
SMART Mechanical Solutions©
Mechanical Solutions • Energy Services
Building Controls • Service & Maintenance
4600 S. 134TH PLACE
TUKWILA, WA 98168 • (206) 248-9700
HOLADAYPARKS.com
WA LICENSE NUMBER: HOLADPI379N0

APPROVED FOR CONSTRUCTION

3700 E MERCER WAY
BARNABIE POINT

NO.	DATE	DESCRIPTION
3	12/15/25	100% CONSTRUCTION DOCS
2	08/25/25	90% CONSTRUCTION DOCS
1	06/04/25	BUILDING PERMIT

4 JUNE 2025
BUILDING PERMIT

PROJECT: 64605

STRUCTURAL CALCULATIONS

M6.05

ALL RIGHTS RESERVED: THESE DRAWINGS BELONG IN ANY FORM TO HOLADAY-PARKS, INC. NO PART OF THIS DOCUMENT MAY BE REPRODUCED IN ANY FORM OR BY ANY MEANS WITHOUT PERMISSION IN WRITING FROM HOLADAY PARKS, INC.

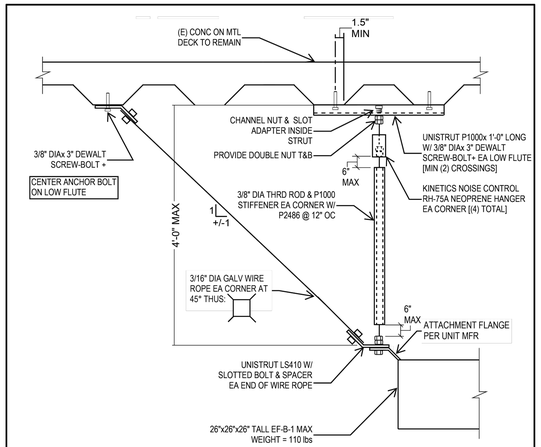

7 **EF-B-1 ANCHORAGE**
NOT TO SCALE

© Copyright 06.2025 D'Amato Conversano Inc. All Rights Reserved
This document, and the ideas and designs may not be reused, in whole or in part, without written permission.
Neither D'Amato Conversano Inc. D'Amato Conversano Inc. disclaims any responsibility for its unauthorized use.

DCI ENGINEERS
818 Stewart Street, Suite 1000
Seattle, Washington 98101
P: (206) 332-1900 www.dci-engineers.com
CIVIL / STRUCTURAL

PROJECT NAME:	BARNABIE POINT MECHANICAL 3700 E MERCER WAY MERCER ISLAND, WA 98040
DESCRIPTION:	EF-B-1 anchorage to concrete on metal deck.
PROJECT NO:	25011-0215
DATE:	05.29.2025
BY:	MSS
SHEET NO:	SSK-07

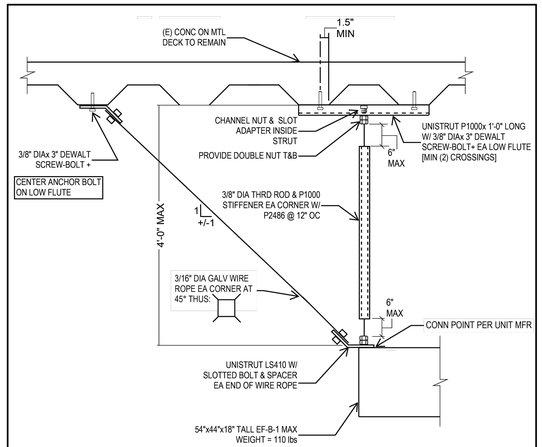

8 **EF-B-1 ANCHORAGE**
NOT TO SCALE

© Copyright 06.2025 D'Amato Conversano Inc. All Rights Reserved
This document, and the ideas and designs may not be reused, in whole or in part, without written permission.
Neither D'Amato Conversano Inc. D'Amato Conversano Inc. disclaims any responsibility for its unauthorized use.

DCI ENGINEERS
818 Stewart Street, Suite 1000
Seattle, Washington 98101
P: (206) 332-1900 www.dci-engineers.com
CIVIL / STRUCTURAL

PROJECT NAME:	BARNABIE POINT MECHANICAL 3700 E MERCER WAY MERCER ISLAND, WA 98040
DESCRIPTION:	EF-B-1 anchorage to concrete on metal deck.
PROJECT NO:	25011-0215
DATE:	05.29.2025
BY:	MSS
SHEET NO:	SSK-08

SHEET NOTES

THE INFORMATION PROVIDED ON THIS SHEET HAS BEEN ENGINEERED BY A WASHINGTON STATE LICENSED STRUCTURAL ENGINEER AS INDICATED BY THE STAMP AND SIGNATURE OF THE LICENSEE FOR THIS PROJECT. ALL INFORMATION PROVIDED IS THE RESPONSIBILITY OF THAT LICENSEE.

FOR STAMP AND SIGNATURE OF LICENSED STRUCTURAL ENGINEER RESPONSIBLE FOR THE CALCULATIONS ON THIS SHEET, SEE SHEET M6.02

HOLADAY-PARKS, INC.
SMART Mechanical Solutions©
Mechanical Solutions • Energy Services
Building Controls • Service & Maintenance
4600 S. 134TH PLACE
TUKWILA, WA 98168 • (206) 248-9700
HOLADAYPARKS.com
WA LICENSE NUMBER: HOLADPI379N0

APPROVED FOR CONSTRUCTION

3700 E MERCER WAY
BARNABIE POINT

NO.	DATE	DESCRIPTION
3	12/15/25	100% CONSTRUCTION DOCS
2	08/25/25	90% CONSTRUCTION DOCS
1	06/04/25	BUILDING PERMIT

4 JUNE 2025

BUILDING PERMIT

PROJECT: 64605

STRUCTURAL CALCULATIONS

M6.06

ALL RIGHTS RESERVED: THESE DRAWINGS BELONG IN ANY FORM TO HOLADAY-PARKS, INC. NO PART OF THIS DOCUMENT MAY BE REPRODUCED IN ANY FORM OR BY ANY MEANS WITHOUT PERMISSION IN WRITING FROM HOLADAY PARKS, INC.

ORIGINAL SHEET SIZE: 24" X 36"

VRF FAN COIL SCHEDULE

(VFC) TAG	AREA SERVED	MANUFACTURER	MODEL	CONFIGURATION (HORIZONTAL/ VERTICAL/ CEILING/WALL)	CONNECTED VRF CONDENSER	CONNECTED HRB/BC/BS (2)	NOMINAL CAPACITY (3)		DESIGN CAPACITY (4)			DESIGN LOAD			OUTSIDE AIR DATA			SUPPLY FAN AND MOTOR DATA						ELECTRICAL DATA					FILTER EFFICIENCY (MERV)	WEIGHT (LBS)	NOTES
							COOLING TOTAL (MBH)	HEATING (MBH)	COOLING TOTAL (MBH)	COOLING SENSIBLE (MBH)	HEATING (MBH)	COOLING TOTAL (MBH)	COOLING SENSIBLE (MBH)	HEATING (MBH)	ECONOMIZER (Y/N)	ECONOMIZER EXCEPTION (5)	AIRFLOW (CFM)	FAN QTY	MOTOR TYPE	E.S.P. (IN WC)	FAN ONLY MODE (6) AIRFLOW (CFM)	FAN ONLY MODE (6) POWER (W)	FAN ONLY MODE (6) WATTS/ CFM	POWER TYPE (8)	VOLTAGE/ PHASE	FLA (AMPS)	MCA (AMPS)	MFS (AMPS)			
VFC-B-1	CONFERENCE 006	MITSUBISHI	PLFY-EP12NEMU-E	CEILING	VRF-R-1	BC-B-1	12.0	13.5	10.8	9.2	8.7	9.5	7.7	3.4	N	C407	0	1	DC	–	565	50	0.09	N	208/230/1	0.31	0.39	15	4	46	1, 9, 10, 12, 16, 17, 18, 19,
VFC-B-2	WORKROOM 005	MITSUBISHI	PLFY-EP18NEMU-E.TH	CEILING	VRF-R-1	BC-B-1	18.0	20.0	16.1	13.8	12.9	9.1	7.4	3.4	N	C407	0	1	DC	–	812	120	0.15	N	208/230/1	0.43	0.54	15	4	55	1, 9, 10, 12, 16, 17, 18, 19,
VFC-B-3	FACULTY 004	MITSUBISHI	PLFY-EP12NEMU-E	CEILING	VRF-R-1	BC-B-1	12.0	13.5	10.8	9.2	8.7	7.0	6.4	0.9	N	C407	0	1	DC	–	565	50	0.09	N	208/230/1	0.31	0.39	15	4	46	1, 9, 10, 12, 16, 17, 18, 19,
VFC-B-4	ART 003	MITSUBISHI	PLFY-EP18NEMU-E.TH	CEILING	VRF-R-1	BC-B-1	18.0	20.0	16.1	13.7	12.9	15.2	13.0	6.2	N	C407	0	1	DC	–	812	120	0.15	N	208/230/1	0.43	0.54	15	4	55	1, 9, 10, 12, 16, 17, 18, 19,
VFC-B-5A	STEM / SCIENCE 002	MITSUBISHI	PLFY-EP18NEMU-E.TH	CEILING	VRF-R-1	BC-B-1	18.0	20.0	16.1	13.7	12.9	25.1	21.5	10.1	N	C407	0	1	DC	–	812	120	0.15	N	208/230/1	0.43	0.54	15	4	55	1, 9, 10, 12, 16, 17, 18, 19,
VFC-B-5B	STEM / SCIENCE 002	MITSUBISHI	PLFY-EP18NEMU-E.TH	CEILING			18.0	20.0	16.1	13.7	12.9				N	C407	0	1	DC	–	812	120	0.15	N	208/230/1	0.43	0.54	15	4	55	1, 9, 10, 12, 16, 17, 18, 19,
VFC-B-6	CIRC 001	MITSUBISHI	PEFY-P12NMAU-E4	HORIZONTAL	VRF-R-1	BC-B-1	12.0	13.5	10.7	7.8	8.7	6.7	6.1	0.9	N	C407	0	1	DC	0.28	318	85	0.27	N	208/230/1	1.7	2.13	15	8	47	1, 9, 10, 12, 13, 14, 15, 17, 18, 19,
VFC-1-1	LRC-1 119	MITSUBISHI	PKFY-P12NLMU-ER1.TH	WALL MOUNT	VRF-R-1	BC-1-1	12.0	13.5	10.8	9.2	8.7	8.8	8.0	2.8	N	C407	0	1	DC	–	297	30	0.10	N	208/230/1	0.2	0.24	15	4	24.5	1, 9, 10, 12, 16, 17, 18, 19, 20
VFC-1-2A	PRESCHOOL 118	MITSUBISHI	PLFY-EP18NEMU-E.TH	CEILING	VRF-R-1	BC-1-1	18.0	20.0	16.1	13.7	12.9	27.3	1.0	11.8	N	C407	0	1	DC	–	812	120	0.15	N	208/230/1	0.43	0.54	15	4	55	1, 9, 10, 12, 16, 17, 18, 19,
VFC-1-2B	PRESCHOOL 118	MITSUBISHI	PLFY-EP12NEMU-E	CEILING			12.0	13.5	10.8	9.2	8.7				N	C407	0	1	DC	–	565	50	0.09	N	208/230/1	0.31	0.39	15	4	46	1, 9, 10, 12, 16, 17, 18, 19,
VFC-1-3	PRESCHOOL 117	MITSUBISHI	PLFY-EP30NEMU1-E.TH	CEILING	VRF-R-1	BC-1-1	30.0	34.0	26.9	19.9	21.9	24.7	21.2	11.7	N	C407	0	1	DC	–	812	120	0.15	N	208/230/1	0.45	0.57	15	4	55	1, 9, 10, 12, 16, 17, 18, 19,
VFC-1-4	CLASSROOM 116	MITSUBISHI	PLFY-EP24NEMU1-E.TH	CEILING	VRF-R-1	BC-1-1	24.0	27.0	21.5	15.9	17.4	17.5	13.8	9.9	N	C407	0	1	DC	–	812	120	0.15	N	208/230/1	0.43	0.54	15	4	55	1, 9, 10, 12, 16, 17, 18, 19,
VFC-1-5	CLASSROOM 115	MITSUBISHI	PLFY-EP24NEMU1-E.TH	CEILING	VRF-R-1	BC-1-1	24.0	27.0	21.5	15.9	17.4	17.8	13.9	10.1	N	C407	0	1	DC	–	812	120	0.15	N	208/230/1	0.43	0.54	15	4	55	1, 9, 10, 12, 16, 17, 18, 19,
VFC-1-6	OFFICES 114B/C/D	MITSUBISHI	PEFY-P06NMAU-E4	HORIZONTAL	VRF-R-1	BC-1-1	6.0	6.7	5.4	5.4	4.3	3.8	3.4	2.6	N	C407	0	1	DC	0.28	265	85	0.32	N	208/230/1	1.4	1.75	15	8	47	1, 9, 10, 12, 13, 14, 15, 17, 18, 19,
VFC-1-7	CLASSROOM 113	MITSUBISHI	PLFY-EP24NEMU1-E.TH	CEILING	VRF-R-1	BC-1-1	24.0	27.0	21.5	15.9	17.4	17.4	13.7	9.9	N	C407	0	1	DC	–	812	120	0.15	N	208/230/1	0.43	0.54	15	4	55	1, 9, 10, 12, 16, 17, 18, 19,
VFC-1-8	KITCHEN 102	MITSUBISHI	PLFY-EP18NEMU-E.TH	CEILING	VRF-R-1	BC-1-1	18.0	20.0	16.1	13.7	12.9	3.9	3.4	0.5	N	C407	0	1	DC	–	812	120	0.15	N	208/230/1	0.43	0.54	15	4	55	1, 9, 10, 12, 16, 17, 18, 19,
VFC-1-9	OFFICE 112	MITSUBISHI	PLFY-P05NFMU-ER1.TH	2x2 CEILING	VRF-R-1	BC-1-1	5.0	5.6	4.5	4.2	3.6	3.8	3.6	0.9	N	C407	0	1	DC	–	280	50	0.18	N	208/230/1	0.19	0.24	15	4	28.9	1, 9, 10, 12, 16, 17, 18, 19,
VFC-1-10	CIRC 111	MITSUBISHI	PEFY-P15NMAU-E4	HORIZONTAL	VRF-R-1	BC-1-1	15.0	17.0	13.4	10.8	11.0	6.1	5.4	1.2	N	C407	0	2	DC	0.28	424	121	0.29	N	208/230/1	2.3	2.88	15	8	58	1, 9, 10, 12, 13, 14, 15, 17, 18, 19,
VFC-1-11	ADMIN 114 / OFFICE 114A	MITSUBISHI	PEFY-P08NMAU-E4	HORIZONTAL	VRF-R-1	BC-1-1	8.0	9.0	7.2	6.1	5.8	5.8	4.9	1.5	N	C407	0	1	DC	0.28	265	85	0.32	N	208/230/1	1.4	1.75	15	8	47	1, 9, 10, 12, 13, 14, 15, 17, 18, 19,
VFC-1-12	OFFICE 112	MITSUBISHI	PLFY-P08NFMU-ER1.TH	2x2 CEILING	VRF-R-1	BC-1-1	8.0	9.0	7.2	5.9	5.8	4.0	3.7	0.9	N	C407	0	1	DC	–	600	50	0.08	N	208/230/1	0.31	0.39	15	4	46	1, 9, 10, 12, 16, 17, 18, 19,
VFC-1-13	LOBBY 101 EXT.	MITSUBISHI	PLFY-EP08NEMU1-E.TH	CEILING	VRF-R-1	BC-1-1	8.0	9.0	7.2	5.9	5.8	5.6	4.8	0.8	N	C407	0	1	DC	–	600	50	0.08	N	208/1	0.31	0.39	15	4	46	1, 9, 10, 12, 16, 17, 18, 19,
		MITSUBISHI																													
VFC-2-1	CLASSROOM 207	MITSUBISHI	PLFY-EP30NEMU1-E.TH	CEILING	VRF-R-2	BC-2-1	30.0	34.0	27.7	20.2	20.9	23.1	17.9	9.2	N	C407	0	1	DC	–	812	120	0.15	N	208/230/1	0.45	0.57	15	4	55	1, 9, 10, 12, 16, 17, 18, 19,
VFC-2-2	CLASSROOM 206	MITSUBISHI	PLFY-EP30NEMU1-E.TH	CEILING	VRF-R-2	BC-2-1	30.0	34.0	27.7	20.2	20.9	24.7	19.0	10.1	N	C407	0	1	DC	–	812	120	0.15	N	208/230/1	0.45	0.57	15	4	55	1, 9, 10, 12, 16, 17, 18, 19,
VFC-2-3	BREAKOUT 200A	MITSUBISHI	PLFY-EP24NEMU1-E.TH	CEILING	VRF-R-2	BC-2-1	24.0	27.0	22.2	16.1	16.6	20.7	17.4	7.5	N	C407	0	1	DC	–	812	120	0.15	N	208/230/1	0.43	0.54	15	4	55	1, 9, 10, 12, 16, 17, 18, 19,
VFC-2-4	LRC-2 205	MITSUBISHI	PKFY-P06NLMU-ER1.TH	WALL MOUNT	VRF-R-2	BC-2-1	6.0	6.7	5.5	4.0	4.1	4.1	3.5	1.7	N	C407	0	1	DC	–	173	30	0.17	N	208/230/1	0.2	0.24	15	4	24.5	1, 9, 10, 12, 16, 17, 18, 19, 20
VFC-2-5	CLASSROOM 204	MITSUBISHI	PLFY-EP18NEMU-E.TH	CEILING	VRF-R-2	BC-2-1	18.0	20.0	16.6	14.0	12.3	16.3	11.9	7.9	N	C407	0	1	DC	–	812	120	0.15	N	208/230/1	0.43	0.54	15	4	55	1, 9, 10, 12, 16, 17, 18, 19,
VFC-2-6	CLASSROOM 203	MITSUBISHI	PLFY-EP18NEMU-E.TH	CEILING	VRF-R-2	BC-2-1	18.0	20.0	16.6	14.0	12.3	16.3	11.9	7.7	N	C407	0	1	DC	–	812	120	0.15	N	208/230/1	0.43	0.54	15	4	55	1, 9, 10, 12, 16, 17, 18, 19,
VFC-2-7	CLASSROOM 202	MITSUBISHI	PLFY-EP18NEMU-E.TH	CEILING	VRF-R-2	BC-2-1	18.0	20.0	16.6	14.0	12.3	16.4	11.9	7.7	N	C407	0	1	DC	–	812	120	0.15	N	208/230/1	0.43	0.54	15	4	55	1, 9, 10, 12, 16, 17, 18, 19,
VFC-2-8	BREAK ROOM 211A	MITSUBISHI	PLFY-EP18NEMU-E.TH	CEILING	VRF-R-2	BC-2-1	18.0	20.0	16.6	14.0	12.3	15.6	14.0	4.6	N	C407	0	1	DC	–	812	120	0.15	N	208/230/1	0.43	0.54	15	4	55	1, 9, 10, 12, 16, 17, 18, 19,
VFC-2-9	CIRC 200	MITSUBISHI	PEFY-P12NMAU-E4	HORIZONTAL	VRF-R-2	BC-2-1	12.0	13.5	11.1	8.0	8.3	9.0	7.0	2.4	N	C407	0	1	DC	0.28	318	85	0.27	N	208/230/1	1.7	2.13	15	8	47	1, 9, 10, 12, 13, 14, 15, 17, 18, 19,
VFC-2-10	RENTAL 213	MITSUBISHI	PLFY-EP18NEMU-E.TH	CEILING	VRF-R-2	BC-2-1	18.0	20.0	16.6	14.0	12.3	15.1	13.8	3.6	N	C407	0	1	DC	–	812	120	0.15	N	208/230/1	0.43	0.54	15	4	55	1, 9, 10, 12, 16, 17, 18, 19,
VFC-2-11	RENTAL 212	MITSUBISHI	PLFY-EP08NEMU1-E.TH	CEILING	VRF-R-2	BC-2-1	8.0	9.0	7.4	6.2	5.5	5.7	4.8	2.0	N	C407	0	1	DC	–	600	50	0.08	N	208/230/1	0.31	0.39	15	4	46	1, 9, 10, 12, 16, 17, 18, 19,
VFC-2-12	OFFICE 212B	MITSUBISHI	PLFY-P05NFMU-ER1.TH	2x2 CEILING	VRF-R-2	BC-2-1	5.0	5.6	4.6	4.2	3.4	2.5	2.2	1.5	N	C407	0	1	DC	–	280	50	0.18	N	208/230/1	0.19	0.24	15	4	28.9	1, 9, 10, 12, 16, 17, 18, 19,
VFC-2-13	CONFERENCE RM 212A	MITSUBISHI	PLFY-EP06NEMU1-E.TH	CEILING	VRF-R-2	BC-2-1	6.0	6.7	5.5	4.9	4.1	5.0	3.8	1.5	N	C407	0	1	DC	–	494	50	0.10	N	208/230/1	0.19	0.24	15	4	46	1, 9, 10, 12, 16, 17, 18, 19,
VFC-2-14	CONFERENCE RM 213A	MITSUBISHI	PLFY-EP12NEMU-E	CEILING	VRF-R-2	BC-2-1	12.0	13.5	5.5	4.9	4.1	8.9	6.9	2.4	N	C407	0	1	DC	–	565	50	0.09	N	208/230/1	0.31	0.39	15	4	46	1, 9, 10, 12, 16, 17, 18, 19,
VFC-2-15	WORK ROOM 213B	MITSUBISHI	PLFY-P05NFMU-ER1.TH	2x2 CEILING	VRF-R-2	BC-2-1	5.0	5.6	4.6	4.2	3.4	1.3	1.0	0.2	N	C407	0	1	DC	–	280	50	0.18	N	208/230/1	0.19	0.24	15	4	28.9	1, 9, 10, 12, 16, 17, 18, 19,
VFC-2-16	OFFICE 213C	MITSUBISHI	PLFY-P05NFMU-ER1.TH	2x2 CEILING	VRF-R-2	BC-2-1	5.0	5.6	4.6	4.2	3.4	4.0	3.8	1.2	N	C407	0	1	DC	–	280	50	0.18	N	208/230/1	0.19	0.24	15	4	28.9	1, 9, 10, 12, 16, 17, 18, 19,
		MITSUBISHI																													
VFC-3-1	COO / OFFICE	MITSUBISHI	PEFY-P08NMAU-E4	HORIZONTAL	VRF-R-3	BC-3-1	8.0	9.0	7.0	6.0	5.2	5.9	5.6	1.8	N	C407	0	1	DC	0.28	318	85	0.27	N	208/230/1	1.7	2.13	15	8	47	1, 9, 10, 12, 13, 14, 15, 17, 18, 19,
VFC-3-2	DEV / COMM 303D	MITSUBISHI	PLFY-EP12NEMU-E	CEILING	VRF-R-3	BC-3-1	12.0	13.5	10.5	9.1	7.8	10.6	9.7	3.9	N	C407	0	1	DC	–	565	50	0.09	N	208/230/1	0.31	0.39	15	4	46	1, 9, 10, 12, 16, 17, 18, 19,
VFC-3-3	PROGRAM OFFICE	MITSUBISHI	PLFY-EP15NEMU-E	CEILING	VRF-R-3	BC-3-1	15.0	17.0	13.0	10.6	9.8	12.1	11.0	5.0	N	C407	0	1	DC	–	600	50	0.08	N	208/230/1	0.31	0.39	15	4	46	1, 9, 10, 12, 16, 17, 18, 19,
VFC-3-4	EXEC OFFICE 303F	MITSUBISHI	PLFY-EP06NEMU1-E.TH	CEILING	VRF-R-3	BC-3-1	6.0	6.7	5.2	4.8	3.8	4.5	3.8	2.5	N	C407	0	1	DC	–	494	50	0.10	N	208/230/1	0.19	0.24	15	4	46	1, 9, 10, 12, 16, 17, 18, 19,
VFC-3-5	CAMP SCHECHTER 303	MITSUBISHI	PLFY-EP06NEMU1-E.TH	CEILING	VRF-R-3	BC-3-1	6.0	6.7	5.2	4.8	3.8	5.0	4.4	1.2	N	C407	0	1	DC	–	494	50	0.10	N	208/230/1	0.19	0.24	15	4	46	1, 9, 10, 12, 16, 17, 18, 19,
VFC-3-6	RENTAL OFFICE 300F	MITSUBISHI	PLFY-P05NFMU-ER1.TH	2x2 CEILING	VRF-R-3	BC-3-1	5.0	5.6	4.4	4.2	3.3	2.3	2.1	1.2	N	C407	0	1	DC	–	280	50	0.18	N	208/230/1	0.19	0.24	15	4	28.9	1, 9, 10, 12, 16, 17, 18, 19,
VFC-3-7	RENTAL 302/ OFFICE 302D	MITSUBISHI	PEFY-P24NMAU-E4	HORIZONTAL	VRF-R-3	BC-3-1	24.0	27.0				21.2	18.5	6.8	N	C407	0	2	DC	0.28	742	121	0.16	N	208/1	2.3	2.88	15	8	67	1, 9, 10, 12, 13, 14, 15, 17, 18, 19,
VFC-3-8	OFFICE 302B / C	MITSUBISHI	PEFY-P06NMAU-E4	HORIZONTAL	VRF-R-3	BC-3-1	6.0	6.7	5.2	5.2	3.9	4.4	3.6	1.3	N	C407	0	1	DC	0.28	265	85	0.32	N	208/230/1	1.4	1.75	15	8	47	1, 9, 10, 12, 13, 14, 15, 17, 18, 19,
VFC-3-9	GAME / TECH 301G	MITSUBISHI	PLFY-EP18NEMU-E.TH	CEILING	VRF-R-3	BC-3-1	18.0	20.0				13.4	10.9	4.9	N	C407	0	1	DC	–	812	120	0.15	N	208/1	0.43	0.54	15	4	55	1, 9, 10, 12, 16, 17, 18, 19,
VFC-3-10	MUSIC 301F	MITSUBISHI	PLFY-EP15NEMU-E	CEILING	VRF-R-3	BC-3-1	15.0	17.0	13.1	10.6	9.8	13.6	10.4	5.7	N	C407	0	1	DC	–	600	50	0.08	N	208/230/1	0.31	0.39	15	4	46	1, 9, 10, 12, 16, 17, 18, 19,
VFC-3-11	ART/STEM/OPEN OFFICE	MITSUBISHI	PLFY-EP48NEMU1-E.TH	CEILING	VRF-R-3	BC-3-1	48.0	54.0	41.9	30.8	31.3	33.4	26.1	20.1	N	C407	0	1	DC	–	1236	120	0.10	N	208/230/1	1.01	1.27	15	4	55	1, 9, 10, 12, 16, 17, 18, 19,
VFC-3-12	SNOEZELEN ROOM 301E	MITSUBISHI	PLFY-EP08NEMU1-E.TH	CEILING	VRF-R-3	BC-3-1	8.0	9.0	7.0	6.0	5.2	6.6	5.9	3.4	N	C407	0	1	DC	–	600	50	0.08	N	208/230/1	0.31	0.39	15	4	46	1, 9, 10, 12, 16, 17, 18, 19,
VFC-3-13	OFFICES	MITSUBISHI	PEFY-P24NMAU-E4	HORIZONTAL	VRF-R-3	BC-3-1	24.0	27.0				19.6	17.7	10.2	N	C407	0	2	DC	0.28	742	121	0.16	N	208/1	2.3	2.88	15	8	67	1, 9, 10, 12, 13, 14, 15, 17, 18, 19,
VFC-3-14A	CIRC 300	MITSUBISHI	PMFY-P12NBMU-ER6	CEILING	VRF-R-3	BC-3-1	12.0	13.5	10.5	7.3	7.8	15.9	13.6	9.7	N	C407	0	1	DC	–	328	40	0.12	N	208/230/1	0.21	0.26	15	4	31	1, 9, 10, 12, 16, 17, 18, 19,
VFC-3-14B	CIRC 300	MITSUBISHI	PMFY-P12NBMU-ER6	CEILING			12.0	13.5	10.5	7.3	7.8				N	C407	0	1	DC	–	328	40	0.12	N	208/230/1	0.21	0.26	15	4	31	1, 9, 10, 12, 16, 17, 18, 19,
VFC-3-15	CONFERENCE 303A	MITSUBISHI	PLFY-EP15NEMU-E	CEILING	VRF-R-3	BC-3-1	15.0	17.0	13.0	10.6	9.8	13.2	11.0	5.1	N	C407	0	1	DC	–	600	50	0.08	N	208/230/1	0.31	0.39	15	4	46	1, 9, 10, 12, 16, 17, 18, 19,
VFC-3-16	OFFICE	MITSUBISHI	PLFY-EP12NEMU-E	CEILING	VRF-R-3	BC-3-1	12.0	13.5	10.5	9.1	7.8	7.3	6.6	2.7	N	C407	0	1	DC	–	565	50	0.09	N	208/230/1	0.31	0.39	15	4	46	1, 9, 10, 12, 16, 17, 18, 19,
VHP-C-1	CHAPEL	MITSUBISHI	PEFY-P96NMHSU-E	HORIZONTAL	CU-R-1	N/A	96.0	108.0	89.6	–	76.8	87.9	73.3	32.4	N	C407	0	2	DC	0.6	2966	820	0.28	N	208/230/1	–	8.2	15	8	221	1, 9, 10, 11, 12, 13, 14, 15, 17, 18, 19, 21

1. POWER, WIRING, AND DISCONNECT FURNISHED AND INSTALLED BY E.C.
2. SEE HRB/BC/BS SCHEDULE FOR ADDITIONAL INFORMATION. IF NO HRB/BC/BS IS NOTED, UNIT IS SERVING A VRF MULTI-ZONE SPLIT SYSTEM HEAT PUMP WITH NO HEAT RECOVERY.
3. NOMINAL COOLING AND HEATING CAPACITY IS BASED ON EQUIPMENT MANUFACTURER'S RATED CAPACITY AT AHRI RATING CONDITIONS.
4. DESIGN COOLING AND HEATING CAPACITY LISTED ARE THE RATED CAPACITY OF THE EQUIPMENT AT THE DESIGN COOLING AND HEATING CONDITIONS FOR THE PROJECT.
5. AIR ECONOMIZER EXCEPTION IS BASED ON THE 2021 WASHINGTON STATE OR THE 2021 SEATTLE ENERGY CODE, SECTION C403.3 EXCEPTIONS.
6. "FAN ONLY MODE" REPRESENTS THE FAN AIRFLOW, FAN POWER, AND WATTS PER CFM FOR THE EQUIPMENT WHEN THE FAN IS OPERATING AND NO HEATING OR COOLING IS OCCURRING (DEAD BAND OPERATION).
7. "HEATING/COOLING" MODE REPRESENTS THE FAN AIRFLOW, FAN POWER, AND WATTS/CFM FOR THE EQUIPMENT WHEN THE FAN IS OPERATING IN EITHER HEATING OR COOLING IS OCCURRING.
8. POWER TYPE: E – EMERGENCY, S – LEGALLY REQUIRED, O – OPTIONAL, N – NORMAL.
9. NETWORK CABLING BETWEEN FAN COIL, HEAT RECOVERY UNIT, AND OUTDOOR CONDENSING UNIT PROVIDED AND INSTALLED BY THE CONTROLS CONTRACTOR.
10. WALL-MOUNTED THERMOSTAT FURNISHED WITH EQUIPMENT, INSTALLED BY CONTROLS CONTRACTOR. THERMOSTAT SHALL MEET THE WSEC OR SEATTLE ENERGY CODE REQUIREMENTS INCLUDING PROGRAMMABLE SCHEDULES AND DEADBAND CONTROL.
11. UNIT AIRFLOW EXCEEDS 2000 CFM AND REQUIRES A DUCT MOUNTED SMOKE DETECTOR. DUCT SMOKE DETECTOR FURNISHED BY THE E.C., INSTALLED IN DUCT WORK BY M.C., WIRED TO SHUTDOWN UNIT AND TO FIRE ALARM SYSTEM BY F/L/S CONTRACTOR.
12. CONDENSATE TRAP AND CONDENSATE FURNISHED AND INSTALLED PIPING BY PLUMBING CONTRACTOR. ROUTE CONDENSATE TO INDIRECT CONNECTION AT NEAREST WASTE RECEPTOR.
13. INTEGRAL CONDENSATE PUMP PROVIDED WITH FAN COIL UNIT. CONDENSATE PUMP IS POWERED FROM THE UNIT. NO SEPARATE POWER CONNECTION REQUIRED.
    CONDENSATE PUMP IS PROVIDED WITH A FACTORY INSTALLED SAFETY SWITCH THAT SHUTS OFF THE UNIT IF CONDENSATE OVERFLOW OCCURS WITHIN THE DRAIN PAN.
14. UNIT IS PROVIDED WITH A CONDENSATE DRAIN PAN LEVEL SENSOR. DRAIN PAN LEVEL SENSOR SHALL DISABLE COOLING WHEN ACTIVE PER OPTION 4 OF SECTION 307.2.3 OF THE 2021 IMC/SMC.
15. UNIT IS PROVIDED WITH INTERNAL DRAIN PAN WATER LEVEL MONITORING DEVICE FOR CONDENSATE OVERFLOW IN ACCORDANCE WITH SECTION 307.2.3.1 OF THE 2021 IMC/SMC.
16. UNIT IS EXEMPT FROM SECONDARY DRAIN REQUIREMENTS FOR UNDUCTED FAN COILS IN ACCORDANCE WITH THE EXCEPTION TO SECTION 307.2.3.1 OF THE 2021 SMC
17. UNIT IS PROVIDED WITH SUPPLY FAN CONTROL SUCH THAT THE SUPPLY FAN SHALL BE OFF WHEN THE CORRESPONDING SPACE TEMPERATURE IS BETWEEN 70F AND 75F (DEADBAND).
18. VENTILATION (OUTSIDE AIR) FOR THE SPACES SERVED BY THE UNIT IS PROVIDED BY A DEDICATED OUTSIDE AIR SYSTEM (DOAS) WITH INTEGRAL HEAT RECOVERY. SEE THE HEAT RECOVERY VENTILATOR (DOAS) SCHEDULE.
19. UNIT IS NOT PROVIDED WITH 100% OUTSIDE AIRSIDE ECONOMIZER PER THE EXCEPTION NOTED ABOVE. UNIT IS EXEMPT FROM ECONOMIZER PER EXCEPTION NOTED ABOVE.
20. UNIT IS WALL-MOUNTED. SUPPORTED FRAMING FOR INSTALLATION OF UNIT SHALL BE FURNISHED AND INSTALLED BY THE GENERAL CONTRACTOR.
21. UNIT SHALL BE SUPPORTED WITH MINIMUM 1" DEFLECTION SEISMIC RATED SPRING AND NEOPRENE HANGERS.

VRF CONDENSING UNIT SCHEDULE (AIR-COOLED - MULTI-SPLIT SYSTEM)

(VCU) TAG	AREA SERVED	INSTALLED LOCATION	MANUFACTURER	MODEL	HEATING TYPE (HEAT PUMP HEAT RECOVERY)	MODULES PER UNIT	NOMINAL CAPACITY (3)			EQUIPMENT EFFICIENCY (6)								ECONOMIZER EXCEPTION (7)	C407 (Y/N) (8)	ELECTRICAL DATA (2)					WEIGHT (LBS)	NOTES
							COOLING (TONS)	COOLING (MBH)	HEATING (MBH)	IEER	EER	COP AT 47 °F	COP AT 17 °F	IEER	EER	COP AT 47 °F	COP AT 17 °F			EMERG POWER (9)	VOLTAGE/ PHASE	MCA (AMPS)	MOCP (AMPS)	MFS (AMPS)		
VRF-R-1	LEVEL B & 1	ROOF	MITSUBISHI	PURY-EP288TSNU-A1	HEAT RECOVERY	2	24	276	304	12.5	9.3	3.2	2.05	23.1	10.9	3.26	2.05	NA	Y	N	208/230/3	60 / 60	100 / 100	60 / 60	1360	1, 10, 11
VRF-R-2	LEVEL 2	ROOF	MITSUBISHI	PURY-EP216TNU-A1	HEAT RECOVERY	1	18	206	232	13.7	10.4	3.2	2.05	20.5	11.0	3.30	2.12	NA	Y	N	208/230/3	88	150	90	887	1, 10, 11
VRF-R-3	LEVEL 3	ROOF	MITSUBISHI	PURY-EP216TNU-A1	HEAT RECOVERY	1	18	206	232	13.7	10.4	3.2	2.05	20.5	11.0	3.30	2.12	NA	Y	N	208/230/3	88	150	90	887	1, 10, 11
VRF-R-4	CHAPEL	ROOF	MITSUBISHI	MXZ-SM96TAM-U1	HEAT PUMP	1	8	92	103	14.6	11.0	3.3	2.25	21.2	11.8	3.8	2.47	NA	Y	N	208/230/3	32	58	40	433	1, 10, 11

1. POWER, WIRING, AND DISCONNECT FURNISHED AND INSTALLED BY ELECTRICAL CONTRACTOR.
2. UNIT REQUIRES SEPARATE POWER CONNECTIONS FOR EACH MODULE. SEE EQUIPMENT SUBMITTALS FOR POWER REQUIREMENTS FOR INDIVIDUAL MODULES.
3 NOMINAL COOLING AND HEATING CAPACITY FOR EQUIPMENT BASED ON MANUFACTURER'S DATA.
4 CORRECTED COOLING AND HEATING CAPACITY BASED ON DESIGN CONDITIONS AND FROM MANUFACT

BRANCH CONTROLLER SCHEDULE (VRF)

(BC/HRB/BS) TAG	INSTALLED LOCATION	MANUFACTURER	MODEL	CONTROLLER TYPE (MAIN/SUB/SINGLE)	CAPACITY DATA MAXIMUM (MBH)	CAPACITY DATA PORT (MBH)	NUMBER OF PORTS	CONNECTING INDOOR UNIT TAG BY PORT NUMBER (2) 1	2	3	4	5	6	7	8	9	10	11	12	13	14	15	16	CONNECTING CONDENSING UNIT (3)	ELECTRICAL DATA EMERG POWER	VOLTAGE/ PHASE	MCA (AMPS)	MOCP (AMPS)	WEIGHT (LBS)	NOTES
BC-3-1	LEVEL 3	MITSUBISHI	CMB-P1016NU-JA2	MAIN	432	54	16	VFC-3-1	VFC-3-2	VFC-3-3	VFC-3-4	VFC-3-5	VFC-3-6	VFC-3-7	VFC-3-8	VFC-3-9	VFC-3-10	VFC-3-11	VFC-3-12	VFC-3-13	VFC-3-14A/14B	VFC-3-15	VFC-3-16	VRF-R-3	NO	208/1	1.82	15	153	1, 9, 10
BC-2-1	LEVEL 2	MITSUBISHI	CMB-P1016NU-JA2	MAIN	432	54	16	VFC-2-1	VFC-2-2	VFC-2-3	VFC-2-4	VFC-2-5	VFC-2-6	VFC-2-7	VFC-2-8	VFC-2-9	VFC-2-10	VFC-2-11	VFC-2-12	VFC-2-13	VFC-2-14	VFC-2-15	VFC-2-16	VRF-R-2	NO	208/1	1.82	15	153	1, 9, 10
BC-1-1	LEVEL 1	MITSUBISHI	CMB-P1016NU-JA2	MAIN	432	54	16	VFC-1-1	VFC-1-2A/2B	VFC-1-3	VFC-1-4	VFC-1-5	VFC-1-6	VFC-1-7	VFC-1-8	VFC-1-9	VFC-1-10	VFC-1-11	VFC-1-12	VFC-1-13	NC	NC	NC	VRF-R-1	NO	208/1	1.82	15	153	1, 9, 10
BC-B-1	LEVEL B	MITSUBISHI	CMB-P108NU-KB2	SUB	126	54	8	VFC-B-1	VFC-B-2	VFC-B-3	VFC-B-4	VFC-B-5A/5B	VFC-B-6	NC	NC	NA	NA	NA	NA	NA	NA	NA	NA	VRF-R-1	NO	208/1	0.87	15	69	1, 9, 10

1. POWER, WIRING, AND DISCONNECT FURNISHED AND INSTALLED BY E.C. TO SINGLE POINT POWER CONNECTION.
2. SEE VRF/VRV FAN COIL SCHEDULE FOR INDOOR UNIT INFORMATION. NC = NOT CONNECTED, NA = NOT AVAILABLE BASED ON MAXIMUM NUMBER PF PORTS.
3. SEE VRF/VRV CONDENSING UNIT SCHEDULED FOR OUTDOOR CONDENSING UNIT INFORMATION.
4. POWER TYPE: E – EMERGENCY, S – LEGALLY REQUIRED, O – OPTIONAL, N – NORMAL.
5. SERVICE ACCESS REQUIRED FOR UNIT MAINTENANCE. SEE MECHANICAL PLANS AND EQUIPMENT SUBMITTAL FOR MINIMUM CLEARANCES.
6. COMMUNICATION AND CONTROL WIRING BETWEEN VRF/VRV COMPONENTS FURNISHED AND INSTALLED BY THE CONTROLS CONTRACTOR.
7. UNIT IS SUPPORTED FROM STRUCTURE ABOVE USING THREADED HANGER ROD AND NEOPRENE ISOLATORS, MASON TYPE HD OR APPROVED EQUAL.
8. SEE EQUIPMENT SUBMITTAL AND PIPING DIAGRAM FOR CONNECTING VRF/VRV FAN COIL AND CONNECTING REFRIGERANT PIPE SIZES.
9. UNIT REQUIRES A CONDENSATE DRAIN. CONDENSATE DRAIN TO BE ROUTED TO AN INDIRECT CONNECTION AT NEAREST WASTE RECEPTOR IN ACCORDANCE WITH THE 2015 UPC. CONDENSATE DRAIN PIPE FURNISHED AND INSTALLED BY THE PLUMBING CONTRACTOR.
10. ALL CONNECTIONS TO THE BRANCH CONTROLLER SHALL HAVE A FIELD INSTALLED MANUAL ISOLATION BALL VALVE RATED FOR REFRIGERANT USE. BALL VALVES SHALL HAVE SOLDERED CONNECTIONS. VALVE FURNISHED AND INSTALLED BY PIPING CONTRACTOR.
11. ALL CONNECTIONS TO THE BRANCH CONTROLLER SHALL HAVE FACTORY INSTALLED MANUAL ISOLATION BALL VALVE RATED FOR REFRIGERANT USE. SEE EQUIPMENT SUBMITTAL FOR CONNECTION TYPE.

ENERGY RECOVERY VENTILATOR SCHEDULE

TAG	AREA SERVED	MAKE	MODEL	LOCATION	OPERATION CV / MV/SZ	SUPPLY FAN DATA AIRFLOW (CFM)	ESP (IN WC)	MAX BHP	MHP (HP)	EXHAUST FAN DATA AIRFLOW (CFM)	ESP (IN WC)	MAX BHP	MHP (HP)	MINIMUM AIRFLOW (CFM)	RECOVERY TYPE (HX/WHEEL)	WINTER PERFORMANCE (3) OSA T (DB/WB)	RA T (DB/WB)	SAT (DB/WB)	EAT (DB/WB)	SUMMER PERFORMANCE (4) OSA T (DB/WB)	RA T (DB/WB)	SA T (DB/WB)	EA T (DB/WB)	WINTER RECOVERY (5) TOTAL (%)	SENSIBLE (%)	SUMMER RECOVERY (6) TOTAL (%)	SENSIBLE (%)	ELECTRICAL DATA POWER TYPE (7)	VOLTAGE/ PHASE	FLA (AMPS)	MCA (AMPS)	MOCP (AMPS)	FILTER DATA OSA (MERV)	RA (MERV)	WEIGHT (LBS.) (8)	NOTES
ERV-B-1	BASEMENT	AMERICAN ALDES	E1800L-FI-EC-N	BASEMENT LEVEL	CV	915	0.5	0.32	2.5	915	0.5	0.32	2.5		HX	24/23	70/62	58.5/46.1	35.6/32.4	85/67	74/62	77.5/64.2	82.5/65.9	72.8	74.9	70.7	74.9	N	230/1	9.1	–	–	13	8	245	1, 2, 10
ERV-B-2	BASEMENT	AMERICAN ALDES	E1800L-FI-EC-N	BASEMENT LEVEL	CV	1300	0.5	0.48	2.5	1200	0.5	0.48	2.5		HX	24/23	70/62	55.9/44.6	38.2/34.3	85/67	74/62	78.1/64.4	81.9/65.6	67.1	69.4	65	69.4	N	230/1	9.1	–	–	13	8	245	1, 2, 10
ERV-C-1	CHAPEL 103A	AMERICAN ALDES	E1100L-FI-EC-N	LEVEL 2 MECH MEZZ	SZ	900	0.4	0.45	2.5	900	0.5	0.45	2.5		HX	24/23	70/62	53.0/42.3	41.1/36.9	85/67	74/62	78.7/64.8	81.3/65.3	59.1	63.0	57.2	63.0	N	230/1	9.1	–	–	13	8	245	1, 2, 10
ERV-1-1	LEVEL 1	AMERICAN ALDES	E1100L-FI-EC-N	LEVEL 1	MV	695	0.5	0.24	2.5	695	0.5	0.24	2.5		HX	24/23	70/62	55.4/43.8	38.7/35.2	85/67	74/62	78.2/64.5	81.8/65.5	64.2	68.3	62.3	68.3	N	230/1	5.6	–	–	13	8	204	1, 2, 10
ERV-1-2	LEVEL 1	AMERICAN ALDES	E1100L-FI-EC-N	LEVEL 1	MV	720	0.5	0.25	2.5	720	0.5	0.25	2.5		HX	24/23	70/62	55.1/43.6	39.0/35.4	85/67	74/62	78.2/64.6	81.8/65.5	63.6	67.7	61.7	67.7	N	230/1	5.6	–	–	13	8	204	1, 2, 10
ERV-1-3	LEVEL 1	AMERICAN ALDES	E1100L-FI-EC-N	LEVEL 1	CV	670	0.5	0.23	2.5	670	0.5	0.23	2.5		HX	24/23	70/62	55.7/44.0	38.4/35.0	85/67	74/62	78.1/64.5	81.9/65.6	64.8	69.0	62.9	69.0	N	230/1	5.6	–	–	13	8	204	1, 2, 10
ERV-2-1	LEVEL 2	MITSUBISHI	LGHF600RVX2-E	LEVEL 2	SZ	360	0.35	–	120W	360	0.35	–	120W		HX	24/19	70/62	57.6	35.7	85/65	74/62	77.9/63.0	81.1/63.9	74.5	–	64.5	–	N	208/230/1	6.1	5.2	15	13	7	123	1, 2, 10
ERV-2-2	LEVEL 2	MITSUBISHI	LGHF600RVX2-E	LEVEL 2	SZ	360	0.35	–	120W	360	0.35	–	120W		HX	24/19	70/62	57.6	35.7	85/65	74/62	77.9/63.0	81.1/63.9	74.5	–	64.5	–	N	208/230/1	6.1	5.2	15	13	7	123	1, 2, 10
ERV-2-3	LEVEL 2	MITSUBISHI	LGHF600RVX2-E	LEVEL 2	MV	465	0.35	–	120W	465	0.35	–	120W		HX	24/19	70/62	57.6	35.7	85/65	74/62	77.9/63.0	81.1/63.9	74.5	–	64.5	–	N	208/230/1	6.1	5.2	15	13	7	123	1, 2, 10
ERV-2-4	LEVEL 2	AMERICAN ALDES	E1100L-FI-EC-N	LEVEL 2	CV	680	0.5	0.24	2.5	680	0.5	0.24	2.5		HX	24/23	70/62	55.6/43.9	38.5/35.1	85/67	74/62	78.1/64.5	81.9/65.6	64.6	68.7	62.7	68.7	N	230/1	5.6	–	–	13	8	204	1, 2, 10
ERV-2-5	LEVEL 2	AMERICAN ALDES	E1100L-FI-EC-N	LEVEL 2	CV	560	0.5	0.21	2.5	560	0.5	0.21	2.5		HX	24/23	70/62	57.1/44.8	37.0/34.1	85/67	74/62	77.8/64.4	82.2/65.7	67.8	71.9	65.9	71.9	N	230/1	5.6	–	–	13	8	204	1, 2, 10
ERV-R-1	LEVEL 3	AMERICAN ALDES	PE30	ROOF	MV	2050	0.5	0.86	1.5	2050	0.5	0.86	1.5	330	HX	24/23	70/62	55.6/44.7	38.4/34.2	85/67	74/62	78.1/64.4	81.9/65.6	67.4	68.8	65.2	68.8	N	230/1	5.8	6.5	9.0	13	8	2200	1, 9

1. POWER WIRING AND DISCONNECT FURNISHED AND INSTALLED BY ELECTRICAL CONTRACTOR, SINGLE POINT OF CONNECTION. SEE EQUIPMENT SUBMITTAL FOR ALL POWER AND WIRING REQUIREMENTS.
2. UNIT IS REQUIRED TO BE RATED FOR INDOOR USE. UNIT SHALL BE SUPPORTED FROM THE BUILDING STRUCTURE.
3. WINTER PERFORMANCE IS BASED ON SYSTEM DESIGN REQUIREMENTS AT WINTER PEAK OUTDOOR AIR TEMPERATURES AND DESIGN INDOOR AIR CONDITIONS.
4. SUMMER PERFORMANCE IS BASED ON SYSTEM DESIGN REQUIREMENTS AT SUMMER PEAK OUTDOOR AIR TEMPERATURES AND DESIGN INDOOR AIR CONDITIONS.
5. WINTER SENSIBLE AND TOTAL ENERGY RECOVERY EFFECTIVENESS ARE BASED ON THE DESIGN WINTER OUTSIDE AIR CONDITION OF 24F AND ITS COINCIDENT WETBULB TEMPERATURE AND A DESIGN WINTER INDOOR TEMPERATURE OF 70F AT 30% RELATIVE HUMIDITY.
6. SUMMER SENSIBLE AND TOTAL ENERGY RECOVERY EFFECTIVENESS ARE BASED ON THE DESIGN SUMMER OUTSIDE AIR CONDITION AND THE DESIGN SUMMER INDOOR RETURN AIR TEMPERATURE AS NOTED IN THE SUMMER PERFORMANCE DATA.
7. POWER TYPE: E = EMERGENCY POWER, S = LEGALLY REQUIRED STANDBY POWER, N = NORMAL
8. UNIT EQUIPMENT WEIGHT INCLUDES ALL ACCESSORIES.
9. UNIT SHALL BE SUPPORTED WITH MINIMUM 1" DEFLECTION SEISMIC RATED NEOPRENE HANGERS.
10. OUTSIDE AIR, RELIEF AIR, OR EXHAUST AIR DAMPERS LOCATED AT THE BUILDING ENVELOPE AND ASSOCIATED WITH THE UNIT SHALL BE INTERLOCKED TO BE CLOSED WHEN THE UNIT IS OFF. SEE MOTORIZED DAMPER SCHEDULE AND SEE SEQUENCE OF OPERATION.

DUCTLESS SPLIT SYSTEM SCHEDULE (COOLING ONLY OR HEAT PUMP)

(DXFC-X-Y) TAG	AREA SERVED	TYPE (AC/HP) (2)	NOMINAL COOLING CAPACITY	MANUFACTURER	INDOOR UNIT MODEL	AIRFLOW (CFM)	COOLING DATA (3) DB/WB (°F)	TOTAL	SENSIBLE	HEATING DATA (3) DB (°F)	@47°F	@17°F	ELECTRICAL DATA VOLTS/PH	FLA	MCA	WEIGHT (LBS)	OUTDOOR TAG	MODEL	ELECTRICAL DATA VOLTS/PH	MCA	MFS	MOCP	WEIGHT (LBS)	REFRIGERANT TYPE	POWER TYPE (4)	ECONOMIZER EXCEPTION (5)	SEER2 (6)	EER (7)	HSPF2 (8)	COP @47°F (9)	COP @17°F (9)	NOTES
DXFC-B-1	MDF 001F	AC	2	MITSUBISHI	PKA-A24NL	705	80/67	24000	–	NA	NA	NA	208/230/1	–	1	46.0	CU-B-1	PUY-AH24NL	208/230/1	22	25	37	151	R454B	N	11	21.3	–	–	–	–	1
DXFC-2-1	L2 SHARED IDF RM	HP	2	MITSUBISHI	PKA-A24NL	705	80/67	24000	–	70	28000	15300	208/230/1	–	1	46.0	CU-R-1	PUZ-AH24NL	208/230/1	22	25	37	155	R454B	N	11	21.1	–	9.2	3.4	2.8	1
DXFC-3-1	ELEVATOR MACHINE	HP	1	MITSUBISHI	PKA-AL12NL	320	80/67	12000	–	70	18000	9400	208/230/1	–	1	28.0	CU-R-2	PUZ-AK12NL	208/230/1	16	20	27	99.5	R454B	N	11	21.1	–	10.1	3.1	2.8	1

1. POWER WIRING AND DISCONNECT FURNISHED AND INSTALL ED BY E.C.
2. TYPE: AC = COOLING, HP = HEAT PUMP (HEATING AND COOLING).
3. COOLING AND HEATING DATA IS BASED IN MANUFACTURER'S RATING AT THE ASSOCIATED EQUIPMENT TYPE AHRI CONDITIONS.
4. POWER TYPE: E=EMERGENCY, S=LEGALLY REQUIRED, O=OPTIONAL, N=NORMAL.
5. UNIT IS EXEMPT FROM REQUIRING 100% OUTSIDE AIR ECONOMIZER PER THE EXCEPTION NOTED IN SECTION C403.5 OF THE JURISDICTIONS ENERGY CODE (WSEC OR SEC).
6. SEER IS BASED ON MANUFACTURERS RATING PER AHRI 210 /240 (EQUIPMENT LESS THAN 65 MBH COOLING CAPACITY).
7. EER IS BASED ON MANUFACTURERS RATING PER AHRI 340/360 (EQUIPMENT 65 MBH OR GREATER COOLING CAPACITY).
8. HSPF IS BASED ON MANUFACTURER'S RATING PER AHRI 210/240 (EQUIPMENT LESS THAN 65 MBH HEATING CAPACITY).
9. COP IS BASED ON MANUFACTURER'S RATING PER AHRI 340/360 (EQUIPMENT 65 MBH OR GREATER HEATING CAPACITY).

ROOFTOP CONSTANT VOLUME HEAT PUMP SCHEDULE

TAG	AREA SERVED	INSTALLED LOCATION	MAKE	MODEL	NOMINAL COOLING (TONS)	FACTORY CURB (Y/N) (2)	OSA ECONOMIZER (Y/N) (3) (4)	ECONOMIZER EXCEPTION (5)	COOLING CAPACITY (5) TOTAL (MBH)	SENSIBLE (MBH)	HEATING CAPACITY (5) ELECTRIC HEAT (Y/N)	TOTAL KW	OUTPUT (MBH)	MINIMUM OSA FLOW (CFM)	SUPPLY FAN DATA AIRFLOW (CFM)	ESP (IN W.C.)	FAN BHP	MOTOR HP	ELECTRICAL DATA VOLTAGE/ PHASE	SSCR (KAIC)	MCA (AMPS)	MFS (AMPS)	ENERGY EFFICIENCY (6) SEER2	IEER	HSPF2	COP @ 17	COP @ 47	FILTER EFF. (MERV)	WEIGHT (LBS)	NOTES
RTU-R-1	GYM (EAST)	ROOF	TRANE	WSK090	7.5	Y	Y	NA	89.6	71.3	Y	18	81	840	3000	0.75	1.14	3.0	208/230/3	5	97	90	–	14.1	–	2.25	3.4	13	1229	1, 9
RTU-R-2	GYM (WEST)	ROOF	TRANE	WHK060	5.0	Y	Y	NA	60.4	48.1	Y	12	53.5	600	2000	0.75	0.87	1.0	208/230/3	5	66	70	15.8	–	7.2	–	–	13	1045	1, 9

1. POWER WIRING AND DISCONNECTS BY E.C.. SINGLE POINT POWER CONNECTION PROVIDED WITH EQUIPMENT.
2. EQUIPMENT IS INSTALLED ON A ROOF CURB. CURB PROVIDED WITH EQUIPMENT AND FIELD INSTALLED BY M.C.
3. IF NOTED, UNIT IS PROVIDED WITH 100% OUTSIDE AIR ECONOMIZER MEETING THE REQUIREMENTS OF THE CURRENT WSEC OR SEC.
4. IF NOTED, EQUIPMENT IS NOT PROVIDED WITH 100% OUTSIDE AIR ECONOMIZER. SEE ADDITIONAL NOTE FOR THE NON-ECONOMIZER EXEMPTION REQUIREMENT.
5. EQUIPMENT COOLING AND HEATING CAPACITY LISTED ARE AT THE RATING CONDITIONS BASED ON THE EQUIPMENT TYPE AND THE CATEGORY OF THE EQUIPMENT.
6. ENERGY EFFICIENCY NOTED IS BASED ON AHRI DATA PROVIDED BY THE EQUIPMENT MANUFACTURER.
   ENERGY EFFICIENCY LISTED ARE BASED ON THE AHRI RATED CONDITIONS IN ACCORDANCE WITH THE APPLICABLE AHRI STANDARD LISTED IN THE CURRENT WASHINGTON STATE OR SEATTLE ENERGY CODE, AS APPLICABLE.
7. ADDITIONAL EQUIPMENT OPTIONS INCLUDED: FACTORY CURB, PROGRAMMABLE CONTROLLER, POWER RETURN AIR EXHAUST.
8. EQUIPMENT AIRFLOW DOES NOT EXCEED 2000 CFM. RETURN AIR DUCT SMOKE DETECTION IS NOT REQUIRED.
9. EQUIPMENT AIRFLOW EXCEEDS 2000 CFM. RETURN DUCT SMOKE DETECTION IS REQUIRED.

FAN SCHEDULE

TAG	FUNCTION	AREA SERVED	LOCATION INSTALLED	MAKE	MODEL	TYPE	NORMAL FAN PERFORMANCE DATA AIRFLOW (CFM)	E.S.P. (IN WC)	T.S.P (IN WC)	FAN RPM	BRAKE HP	EFF. (%)	MOTOR POWER (HP)	EC MOTOR (Y/N)	VFD (Y/N)	VOLTAGE/ PHASE	POWER TYPE (4)	WEIGHT (LBS)	NOTES
EF-B-1	EXHAUST	ELECTRICAL RM 002B	ELECTRICAL RM 002B	GREENHECK	SQ-160-VG	INLINE	2400	0.65	–	1103	0.51	–	3/4	Y	N	208/1	N	106	1, 5
EF-B-2	EXHAUST	KILN ROOM	KILN ROOM	GREENHECK	SQ-9-VG	INLINE	1000	0.35	–	1485	0.12	–	1/4	Y	N	115/1	N	49	1, 7
EF-R-1	EXHAUST	STEM/SCIENCE 002	ROOF	LABCONCO	177052100	CENT. UPBLAST	550	0.5	–	1100		–	1	Y	N	115/1	N		1, 8, 9

1. POWER WIRING AND DISCONNECT PROVIDED BY ELECTRICAL CONTRACTOR.
2. POWER TYPE: E = EMERGENCY POWER, S = LEGALLY REQUIRED STANDBY POWER, N = NORMAL
3. MANUAL STARTER W/OVERLOAD PROTECTION SHALL BE FURNISHED AND INSTALLED BY ELECTRICAL CONTRACTOR.
4. AUTOMATIC MOTOR STARTER WITH HOA SWITCH SHALL BE FURNISHED AND INSTALLED BY E.C., COIL CIRCUIT POWERED BY E.C., COIL VOLTAGE TO BE 120V.
5. LINE VOLTAGE (120V) T-STAT WITH TEMPERATURE RANGE BETWEEN 60 AND 100 DEG. F SHALL BE PROVIDED BY M.C. AND INSTALLED BY E.C.
6. FAN SUPPLIED WITH BACKDRAFT DAMPER AND FACTORY CURB.
7. LINE VOLTAGE T-STAT SHALL BE PROVIDED BY C.C. AND INSTALLED BY E.C.
8. EXHAUST FAN SHALL BE PROVIDED BY OWNER WITH FUME HOOD.
9. INTERLOCK FAN WITH FUME HOOD IN SCIENCE LAB ON BASEMENT FLOOR.

FAN HEATER SCHEDULE

TAG	LOCATION	AREA SERVED	MAKE	MODEL	ELECTRICAL KW	ELECTRICAL VOLTS/PH	# OF STGS	CFM	REMARKS
FH-B-1	LEVEL 1	SCIENCE LAB	THERMOLEC	FER-12-6-208/3	6	208/3	SCR	350	1, 2

1: UNIT PROVIDED BY M.C. WIRING AND DISCONNECT BY E.C.
2: PRESET UNIT TO DELIVER MIN. 68 DEG. SUPPLY AIR.

HOLADAY-PARKS, INC.
SMART Mechanical Solutions©
Mechanical Solutions • Energy Services
Building Controls • Service & Maintenance
4600 S. 134TH PLACE
TUKWILA, WA 98168 • (206) 248-9700
HOLADAYPARKS.COM
WA LICENSE NUMBER: HOLADPI379N0

MAXWELL GREENHECK — STATE OF WASHINGTON — 52096 — REGISTERED PROFESSIONAL ENGINEER
12/15/2025

APPROVED FOR CONSTRUCTION

3700 E MERCER WAY
BARNABIE POINT

NO.	DATE	DESCRIPTION
3	12/15/25	100% CONSTRUCTION DOCS
2	08/25/25	90% CONSTRUCTION DOCS
1	06/04/25	BUILDING PERMIT

4 JUNE 2025
BUILDING PERMIT

PROJECT: 64605

SCHEDULES

M7.02

(ORIGINAL SHEET SIZE: 24" X 36")

ALL RIGHTS RESERVED: THESE DRAWINGS BELONG IN ANY FORM TO HOLADAY-PARKS, INC. NO PART OF THIS DOCUMENT MAY BE REPRODUCED IN ANY FORM OR BY ANY MEANS WITHOUT PERMISSION IN WRITING FROM HOLADAY-PARKS, INC.

MOTORIZED CONTROL DAMPER SCHEDULE

TAG	AREA SERVED	LOCATION INSTALLED	ASSOCIATED UNIT	MAKE	MODEL	AMCA 500D LEAKAGE CLASS (4)	FUNCTION	DAMPER SIZE WIDTH (IN)	DAMPER SIZE HEIGHT (IN)	DUCT SIZE (5) WIDTH (IN)	DUCT SIZE (5) HEIGHT (IN)	BLADE CONFIGURATION (PARALLEL/OPPOSED)	ACTUATOR DATA SPRING CLOSED (Y/N)	SPRING OPEN (Y/N)	END SWITCH (Y/N)	MODULATING (Y/N)	2-POSITION (Y/N)	NOTES
MD-B-1	LEVEL B01	LEVEL B01	ERV-B-1	POTTORFF	CD-46	I	ERV OSA	10	16	10	16	PARALLEL	Y	N	N	N	Y	1, 2, 7
MD-B-2	LEVEL B01	LEVEL B01	ERV-B-1	POTTORFF	CD-46	I	ERV EXHAUST	10	16	10	16	PARALLEL	Y	N	N	N	Y	1, 2, 7
MD-B-3	ELEC. RM	ELEC. RM	EF-B-1	POTTORFF	CD-46	I	EF-B-1 EXH	20	20	20	20	PARALLEL	Y	N	N	N	Y	1, 2, 7
MD-B-4	ELEC. RM	ELEC. RM	–	POTTORFF	CD-46	I	MUA	36	24	–	–	PARALLEL	Y	N	N	N	Y	1, 2, 7
MD-B-5	KILN RM	KILN RM	EF-B-2	POTTORFF	CD-46	I	EF-B-1 EXH	20	10	20	10	PARALLEL	Y	N	N	N	Y	1, 2, 7
MD-B-6	KILN RM	KILN RM	–	POTTORFF	CD-46	I	MUA	30	12	–	–	PARALLEL	Y	N	N	N	Y	1, 2, 7
MD-1-1	LEVEL 1	LEVEL 1	ERV-1-1	POTTORFF	CD-46	I	ERV EXHAUST	20	8	20	8	PARALLEL	Y	N	N	N	Y	1, 2, 7
MD-1-2	LEVEL 1	LEVEL 1	ERV-1-1	POTTORFF	CD-46	I	ERV OSA	20	8	20	8	PARALLEL	Y	N	N	N	Y	1, 2, 7
MD-1-3	LEVEL 1	LEVEL 1	ERV-1-2	POTTORFF	CD-46	I	ERV OSA	20	8	20	8	PARALLEL	Y	N	N	N	Y	1, 2, 7
MD-1-4	LEVEL 1	LEVEL 1	ERV-1-2	POTTORFF	CD-46	I	ERV EXHAUST	20	8	20	8	PARALLEL	Y	N	N	N	Y	1, 2, 7
MD-1-5	LEVEL B01	LEVEL B01	ERV-B-2	POTTORFF	CD-46	I	ERV EXHAUST	24	10	24	10	PARALLEL	Y	N	N	N	Y	1, 2, 7
MD-1-6	LEVEL B01	LEVEL B01	ERV-B-2	POTTORFF	CD-46	I	ERV OSA	20	12	20	12	PARALLEL	Y	N	N	N	Y	1, 2, 7
MD-1-7	LEVEL 1	LEVEL 1	ERV-1-3	POTTORFF	CD-46	I	ERV OSA	20	8	20	8	PARALLEL	Y	N	N	N	Y	1, 2, 7
MD-1-8	LEVEL 1	LEVEL 1	ERV-1-3	POTTORFF	CD-46	I	ERV EXHAUST	20	8	20	8	PARALLEL	Y	N	N	N	Y	1, 2, 7
MD-1-9	PRESCHOOL 118	LEVEL 1	ERV-1-1	POTTORFF	CD-46	I	DCV	10	8	10	8	PARALLEL	Y	N	N	Y	N	1, 2, 7
MD-1-10	PRESCHOOL 117	LEVEL 1	ERV-1-1	POTTORFF	CD-46	I	DCV	10	8	10	8	PARALLEL	Y	N	N	Y	N	1, 2, 7
MD-1-11	CLASSRM 116	LEVEL 1	ERV-1-2	POTTORFF	CD-46	I	DCV	10	8	10	8	PARALLEL	Y	N	N	Y	N	1, 2, 7
MD-1-12	CLASSRM 115	LEVEL 1	ERV-1-2	POTTORFF	CD-46	I	DCV	10	8	10	8	PARALLEL	Y	N	N	Y	N	1, 2, 7
MD-1-13	ERV-1-2	LEVEL 1	ERV-1-2	POTTORFF	CD-46	I	RETURN AIR	20	8	20	8	PARALLEL	Y	N	N	Y	N	1, 2, 7
MD-1-14	ERV-1-2	LEVEL 1	ERV-1-2	POTTORFF	CD-46	I	RETURN AIR	20	8	20	8	PARALLEL	Y	N	N	Y	N	1, 2, 7
MD-2-1	CLASSRM 207	LEVEL 2	ERV-2-1	POTTORFF	CD-25R	I	ERV OSA	10R	–	10R	–	PARALLEL	Y	N	N	N	Y	1, 2, 7
MD-2-2	CLASSRM 207	LEVEL 2	ERV-2-1	POTTORFF	CD-25R	I	ERV EXHAUST	10R	–	10R	–	PARALLEL	Y	N	N	N	Y	1, 2, 7
MD-2-3	CLASSRM 206	LEVEL 2	ERV-2-2	POTTORFF	CD-25R	I	ERV OSA	10R	–	10R	–	PARALLEL	Y	N	N	N	Y	1, 2, 7
MD-2-4	CLASSRM 206	LEVEL 2	ERV-2-2	POTTORFF	CD-25R	I	ERV EXHAUST	10R	–	10R	–	PARALLEL	Y	N	N	N	Y	1, 2, 7
MD-2-5	ERV-2-3	LEVEL 2	ERV-2-3	POTTORFF	CD-25R	I	ERV OSA	10R	–	10R	–	PARALLEL	Y	N	N	N	Y	1, 2, 7
MD-2-6	ERV-2-3	LEVEL 2	ERV-2-3	POTTORFF	CD-25R	I	ERV EXHAUST	10R	–	10R	–	PARALLEL	Y	N	N	N	Y	1, 2, 7
MD-2-7	ERV-2-4	LEVEL 2	ERV-2-4	POTTORFF	CD-46	I	ERV OSA	20	8	20	8	PARALLEL	Y	N	N	N	Y	1, 2, 7
MD-2-8	ERV-2-4	LEVEL 2	ERV-2-4	POTTORFF	CD-46	I	ERV EXHAUST	20	8	20	8	PARALLEL	Y	N	N	N	Y	1, 2, 7
MD-2-9	ERV-2-5	LEVEL 2	ERV-2-5	POTTORFF	CD-46	I	ERV OSA	20	8	20	8	PARALLEL	Y	N	N	N	Y	1, 2, 7
MD-2-10	ERV-2-5	LEVEL 2	ERV-2-5	POTTORFF	CD-46	I	ERV EXHAUST	20	8	20	8	PARALLEL	Y	N	N	N	Y	1, 2, 7
MD-2-11	ERV-C-1	LEVEL 2	ERV-C-1	POTTORFF	CD-46	I	ERV OSA	20	8	20	8	PARALLEL	Y	N	N	N	Y	1, 2, 7
MD-2-12	ERV-C-1	LEVEL 2	ERV-C-1	POTTORFF	CD-46	I	ERV EXHAUST	20	8	20	8	PARALLEL	Y	N	N	N	Y	1, 2, 7
MD-3-1	ERV-R-1	LEVEL 3	ERV-R-1	POTTORFF	CD-46	I	R.A.	20	14	20	14	PARALLEL	Y	N	N	Y	N	1, 2, 7
MD-3-2	GAME/TECH 301G	LEVEL 3	ERV-R-1	POTTORFF	CD-46	I	DCV	14	6	14	6	PARALLEL	Y	N	N	Y	N	1, 2, 7
MD-3-3	MUSIC 031F	LEVEL 3	ERV-R-1	POTTORFF	CD-46	I	DCV	10	6	10	6	PARALLEL	Y	N	N	Y	N	1, 2, 7
MD-3-4	ART/STEM/OFFICE	LEVEL 3	ERV-R-1	POTTORFF	CD-46	I	DCV	14	8	14	8	PARALLEL	Y	N	N	Y	N	1, 2, 7

1. E.C TO FURNISH AND INSTALL POWER WIRING AND DISCONNECT FOR DAMPER ACTUATOR POWER. C.C. SHALL COORDINATE WITH E.C. FOR POWER REQUIREMENTS.
2. DAMPER PROVIDED AND INSTALLED BY M.C.
3. DAMPER PROVIDED WITH ASSOCIATED EQUIPMENT AND FIELD INSTALLED BY M.C.
4. DAMPER PROVIDED WITH ASSOCIATED EQUIPMENT AND FACTORY INSTALLED.
5. DAMPER LEAKAGE CLASS BASED ON AMCA 500D. DAMPERS USED FOR BUILDING ENVELOPE ISOLATION SHALL BE LEAKAGE CLASS 1. ALL OTHER DAMPERS SHALL BE LEAKAGE CLASS II.
6. TRANSITIONS REQUIRED TO CONNECT DAMPER TO ASSOCIATED DUCT SHALL BE PROVIDED AND INSTALLED BY M.C.
7. DAMPER ACTUATOR SHALL BE FURNISHED AND INSTALLED BY THE CONTROLS CONTRACTOR. ALL POWER AND DISCONNECTS SHALL BE PROVIDED BY THE E.C.. LOW VOLTAGE POWER TO ACTUATOR SHALL BE INSTALLED BY THE CONTROLS CONTRACTOR.
8. DAMPER ACTUATOR IS PROVIDED WITH THE ASSOCIATED DAMPER. ALL POWER AND DISCONNECTS SHALL BE PROVIDED BY THE E.C..
9. ALL CONTROLS WIRING OF ACTUATOR AND MONITORING OF DAMPER POSITION, IF SPECIFIED, SHALL BE PROVIDED BY THE CONTROLS CONTRACTOR.

ELECTRIC CABINET HEATER SCHEDULE (PROVIDED BY E.C.)

TAG	LOCATION	MAKE	MODEL	K.W.	FAN CFM	FAN H.P.	ELECTRICAL VOLTAGE	ELECTRICAL F.L.A.	MOUNTING (RECESS / SURFACE)	2021 WSEC C403.1.4 EXCEPTION	WEIGHT LBS	REMARKS
ECH-1-1	JDS STAIR	KING	PAW2022	2.25	75	–	208/1	10.8	SURFACE	8	9.5	1, 2, 3
ECH-1-2	VEST 110	KING	PAW1215	1.0	75	–	120/1	12.5	RECESS	8	9.5	1, 2, 3
ECH-1-3	VEST 106	KING	PAW1215	1.0	75	–	120/1	12.5	RECESS	8	9.5	1, 2, 3
ECH-1-4	SE STAIR	KING	PAW1215	2.25	75	–	208/1	10.8	SURFACE	8	9.5	1, 2, 3
ECH-1-5	VEST 100	KING	PAW2720	1.5	75	–	120/1	12.5	SURFACE	8	9.5	1, 2, 3
ECH-1-6	L1 RESTROOM	KING	PAW1215	1.5	75	–	120/1	12.5	RECESS	8	9.5	1, 2, 3
ECH-1-7	L1 RESTROOM	KING	PAW1215	1.5	75	–	120/1	12.5	RECESS	8	9.5	1, 2, 3

1. UNIT PROVIDED AND INSTALLED BY E.C.. POWER WIRING AND DISCONNECT FURNISHED AND INSTALLED BY E.C.
2. PROVIDED WITH UNIT MOUNTED T-STAT CONTROL.
3. SET HEATER TO 65 DEG. F.

ORIGINAL SHEET SIZE: 24" X 36"

HOLADAY-PARKS, INC.
SMART Mechanical Solutions©
Mechanical Solutions • Energy Services
Building Controls • Service & Maintenance
4600 S. 134TH PLACE
TUKWILA, WA 98168 • (206) 248-9700
HOLADAYPARKS.COM
WA LICENSE NUMBER: HOLADPI379N0

MAXWELL L. GREENSTICK — STATE OF WASHINGTON — 52096 — REGISTERED PROFESSIONAL ENGINEER

12/15/2025

APPROVED FOR CONSTRUCTION

3700 E MERCER WAY
BARNABIE POINT

NO.	DATE	DESCRIPTION
3	12/15/25	100% CONSTRUCTION DOCS
2	08/25/25	90% CONSTRUCTION DOCS
1	06/04/25	BUILDING PERMIT

4 JUNE 2025
BUILDING PERMIT

PROJECT: 64605

SCHEDULES

M7.03

ALL RIGHTS RESERVED: THESE DRAWINGS BELONG IN ANY FORM TO HOLADAY-PARKS, INC. NO PART OF THIS DOCUMENT MAY BE REPRODUCED IN ANY FORM OR BY ANY MEANS WITHOUT PERMISSION IN WRITING FROM HOLADAY PARKS, INC.

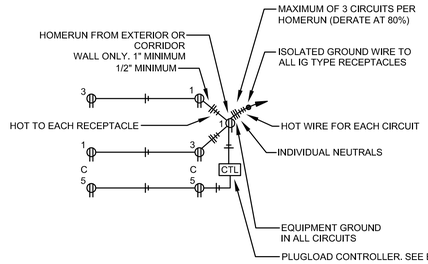

TYPICAL RECEPTACLE CIRCUITING DETAIL

SCALE: NONE

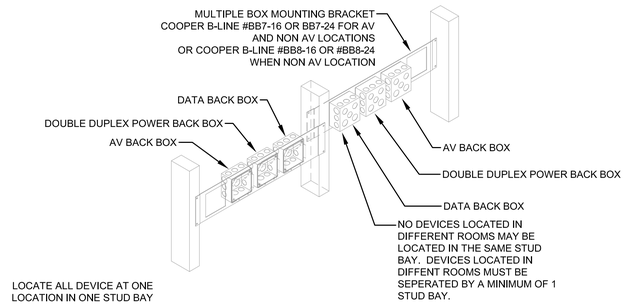

POWER, DATA AND AV ROUGH IN DETAIL

SCALE: NONE

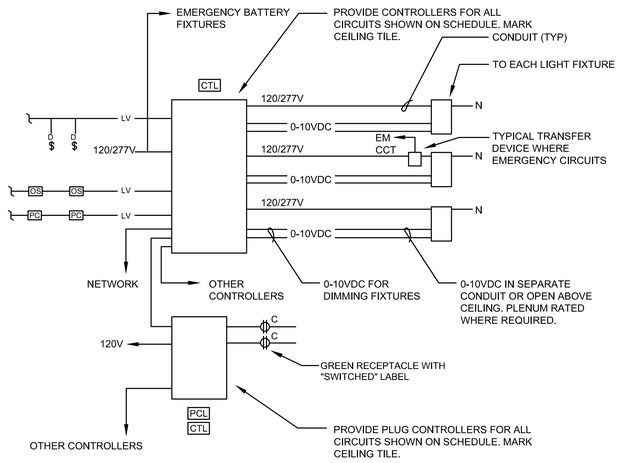

TYPICAL LIGHTING CONTROL DETAIL

SCALE: NONE

LEGEND

- CONDUIT CONCEALED IN CEILING OR WALLS
- CONDUIT CONCEALED UNDERGROUND, UNDER FLOOR, OR IN WALL
- 3/4" CONDUIT. TICK MARKS INDICATE NUMBER OF #12 WIRES. NO TICK MARKS EQUALS 2#12. GROUND WIRE NOT SHOWN. PROVIDE GROUND WIRE IN ALL 120V AND ABOVE CIRCUITS.
- 3/4" CONDUIT. TICK MARKS INDICATE NUMBER OF #12 WIRES. NO TICK MARKS EQUALS 2#12. PROVIDE GROUND WIRE IN ALL 120V AND ABOVE CIRCUITS. DOT INDICATES ISOLATED GROUND WIRE.
- EXPOSED CONDUIT
- UNDER FLOOR DUCT WITH FLUSH ACTIVATIONS SHOWN
- EXISTING CONDUIT WITH NEW WIRES INDICATED BY TICK MARKS
- EXISTING CONDUIT
- HOME RUN TO DESTINATION INDICATED. 1" MINIMUM UNLESS NOTED OTHERWISE.
- RECESSED LIGHT FIXTURE, LETTERS DENOTE SWITCHING, PROVIDE BALLASTS ACCORDINGLY.
- SURFACE OR PENDANT MOUNTED FIXTURE
- FIXTURE WITH INTERNAL BATTERY BACKUP.
- RECESSED LIGHT FIXTURE
- WALL MOUNTED FIXTURE
- STEP LIGHT
- D — LED DRIVER
- DIRECTIONAL LIGHT
- VANITY LIGHT, WALL MOUNT
- WALL SCONCE FIXTURE
- POLE TOP LIGHT FIXTURE LIGHT FIXTURE
- POLE LIGHT
- EXIT SIGN LIGHT FIXTURE TYPE X, EXCEPT AS NOTED
- WALL SWITCH, 1-POLE (SWITCH LEG INDICATED WHERE REQUIRED)
- WALL SWITCH, 2-POLE
- WALL SWITCH, 3-WAY
- WALL SWITCH, 4 WAY
- DIGITAL SWITCH
- DIGITAL SWITCH KEY SWITCH
- WALL SWITCH, KEYED OPERATED, TYPE AS INDICATED
- WALL SWITCH, 3-WAY, KEYED OPERATED, TYPE AS INDICATED
- MANUAL MOTOR STARTING SWITCH
- WALL SWITCH WITH PILOT LIGHT
- REMOTE SWITCH
- WALL SWITCH WITH INTEGRAL OCCUPANCY SENSOR
- OS — OCCUPANCY SENSOR
- OSR — OCCUPANCY SENSOR WALL MOUNT
- PC — PHOTO CELL
- PCR — PHOTO CELL WALL MOUNT
- CTL PCL — PLUG LOAD CONTROLLER
- CTL — LIGHTING CONTROLLER
- XXX XXXX — LIGHTING FIXTURE TYPE DESIGNATOR, SEE LIGHT FIXTURE SCHEDULE
- DUPLEX RECEPTACLE, TAMPERPROOF
- C — DUPLEX RECEPTACLE, TOP OUTLET CONTROLLED BOTTOM OUTLET UNCONTROLLED, TAMPERPROOF
- M — DUPLEX RECEPTACLE AT MONITOR
- DUPLEX RECEPTACLE TAMPERPROOF ABOVE COUNTER
- C — DOUBLE DUPLEX TAMPERPROOF RECEPTACLE ONE DUPLEX CONTROLLED, OTHER DUPLEX UNCONTROLLED MOUNTED ABOVE COUNTER
- C — DOUBLE DUPLEX TAMPERPROOF RECEPTACLE ONE DUPLEX CONTROLLED, OTHER DUPLEX UNCONTROLLED
- DOUBLE DUPLEX RECEPTACLE, TAMPERPROOF
- IG — RECEPTACLE ISOLATED GROUND TYPE, TAMPERPROOF
- GFI — DUPLEX TAMPERPROOF RECEPTACLE GFI TYPE
- WP — WEATHERPROOF DUPLEX RECEPTACLE (GFI TYPE), TAMPERPROOF
- SPLIT WIRED TAMPERPROOF RECEPTACLE
- 1Ø SPECIAL RECEPTACLE AS NOTED
- 3Ø SPECIAL RECEPTACLE AS NOTED
- PUSHBUTTON SWITCH
- A — ADA DOOR ACTUATOR
- EQUIPMENT CONNECTION
- MOTOR CONNECTION
- DISCONNECT SWITCH
- FUSED DISCONNECT SWITCH
- MANUAL MOTOR STARTER
- MAGNETIC MOTOR STARTER
- COMBINATION STARTER
- VFD — VARIABLE FREQUENCY DRIVE
- ECM — ECM CONTROLLER
- FC — FAN CONTROLLER
- THERMOSTAT
- J — JUNCTION BOX
- B — BLIND CONNECTION
- CF — CEILING FAN CONNECTION

LEGEND

- V — VOLUME CONTROL
- AV1 AV2 AVM — AV SYSTEM OUTLETS
- S — CEILING INTERCOM SPEAKER
- SH — WALL MOUNTED INTERCOM SPEAKER
- S3 S2 S — AV SYSTEM SPEAKER
- S SH S2 — WALL MOUNTED AV SYSTEM SPEAKER
- DIGITAL CLOCK
- DIGITAL CLOCK/SPEAKER COMBINATION BAFFLE
- SB — SCOREBOARD
- CS — INTERCOM SYSTEM CALL SWITCH
- C — FUTURE COMPUTER OUTLET WITH 1" CONDUIT TO ABOVE ACCESSIBLE CEILING
- DATA OUTLET (NUMBER = NUMBER OF RJ45 JACKS, NO NUMBER = 1) WITH 1.25" CONDUIT TO ABOVE CEILING
- WAP — WIRELESS ACCESS POINT
- V — VIDEO SURVEILLANCE OUTLET AT CAMERA
- A — ACCESS CONTROL OUTLET - 1 DATA CABLE AND 4#18 POWER CABLE TO MDF/IDF
- I — INTERCOM DATA OUTLET
- AMP — VOICE ENHANCEMENT SYSTEM AMP
- WM — WIRELESS MIC ANTENNA
- AL — ASSISTED LISTENING ANTENNA
- REX — REQUEST TO EXIT
- CR — CARD READER
- CRJ — CARD READER, JAMB MOUNTED.
- DS — DOOR SWITCH
- MS — MOTION SENSOR
- MSH — MOTION SENSOR WALL MOUNT
- REQUEST TO EXIT IN DOOR HARDWARE
- K — SECURITY KEYPAD
- EL — ELECTRIC LOCK
- FIRE ALARM SPEAKER/STROBE
- F — FIRE ALARM PULL STATION
- FIRE ALARM ADA STROBE WALL MOUNTED
- FIRE ALARM ADA STROBE
- S — SMOKE DETECTOR/SENSOR
- S D — DUCT SMOKE DETECTOR
- F — HEAT DETECTOR, FIXED TEMPERATURE
- HEAT DETECTOR/SENSOR (THERMAL DETECTION)
- D — DOOR HOLDER-PROVIDED BY HARDWARE SUPPLIER. CONNECTION BY ELEC.
- SD — SMOKE DAMPER CONNECTION
- SD — FIRE ALARM SMOKE DAMPER RELAY, SEE
- SPRINKLER CONNECTION
- EXIST DEVICE/FIXTURE AS INDICATED
- EXISTING PANCAKE MOLD WITH INTEGRAL DEVICES AS INDICATED.
- EXIST DEVICE/FIXTURE AS INDICATED TO BE REMOVED
- CIRCUIT BREAKER
- SWITCH
- FUSED SWITCH
- FUSE
- TRANSFORMER
- GROUNDING PER CODES
- BUS TAP
- 208V OR 240V PANEL
- LVR
- 480V PANEL
- T — TRANSFORMER
- FOIC — FURNISHED BY OWNER INSTALLED BY CONTRACTOR
- FOIO — FURNISHED BY OWNER INSTALLED BY OWNER
- GFI — GROUND FAULT CIRCUIT INTERRUPTER
- IG — ISOLATED GROUND
- WP — WEATHERPROOF

LEGEND

- A — ACCESS CONTROL CIRCUIT AS REQUIRED. PROVIDE IN RACEWAY IN WALLS AND ABOVE NON ACCESSIBLE CEILINGS.
- AV — AV SYSTEM CIRCUITRY. SEE AV DIAGRAMS.
- CT — CABLE TRAY
- FA — FIRE ALARM SYSTEM CIRCUITRY AS REQUIRED BY MANUFACTURER IN METALLIC RACEWAY
- I — INTERCOM SYSTEM CIRCUITRY. PROVIDE IN RACEWAY IN WALLS AND ABOVE NON-ACCESSIBLE CEILINGS
- LV — LOW VOLTAGE CIRCUITRY AS REQUIRED BY MANUFACTURER IN RACEWAY WHERE IN WALLS, ABOVE NON-ACCESSIBLE CEILINGS OR EXPOSED.
- S — SECURITY SYSTEM CIRCUITRY AS REQUIRED BY MANUFACTURER. ROUTE IN RACEWAYS WHERE IN WALLS OR ABOVE NON-ACCESSIBLE CEILINGS.
- T — DATA AND VOICE CABLES. QUANTITY AND TYPE AS INDICATED BY OUTLET
- A / B — DETAIL INDICATOR WITH SHEET WHERE DRAWN INDICATED
- SECTION INDICATOR
- XXXX — AVAILABLE FAULT CURRENT AS INDICATED
- 1 — FLAG NOTE

TFWB ENGINEERS INC
Travis Fitzmaurice Wartelle Balangue Engineers Inc.
1200 Westlake Ave. N., #509
Seattle, WA 98109
p: 206-285-7228 | info@tf-wb.com

3427 BEACON AVE S
SEATTLE 98144
ANJALI@AGRANTDESIGN.COM
206-512-4209

anjali grant design LLC

KEVIN E. WARTELLE — STATE OF WASHINGTON — 44109 — REGISTERED PROFESSIONAL ENGINEER

3700 E MERCER WAY
BARNABIE POINT PROJECT

NO.	DATE	DESCRIPTION
		4 JUNE 2025 BUILDING PERMIT

PROJECT: 23-101

LEGEND

E-100

O:\CAD\ARKIT Ref\ 23-101E-100.dwg
2025-06-04 2:29 PM

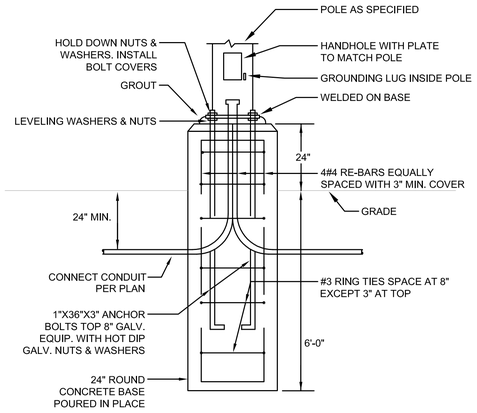

2 LIGHT POLE BASE DETAIL

SCALE: NTS

FLAG NOTES:

1. INSTALLED DOUBLE EV EV SHARED LOAD MANAGEMENT CHARGING STATION
2. FUTURE DOUBLE EV CHARGING STATION. LOCATION SHALL BE EV READY WITH CONDUIT AND WIRE INSTALLED.
3. FUTURE DOUBLE EV CHARGING STATION. LOCATION SHALL BE EV CAPABLE WITH CONDUIT INSTALLED

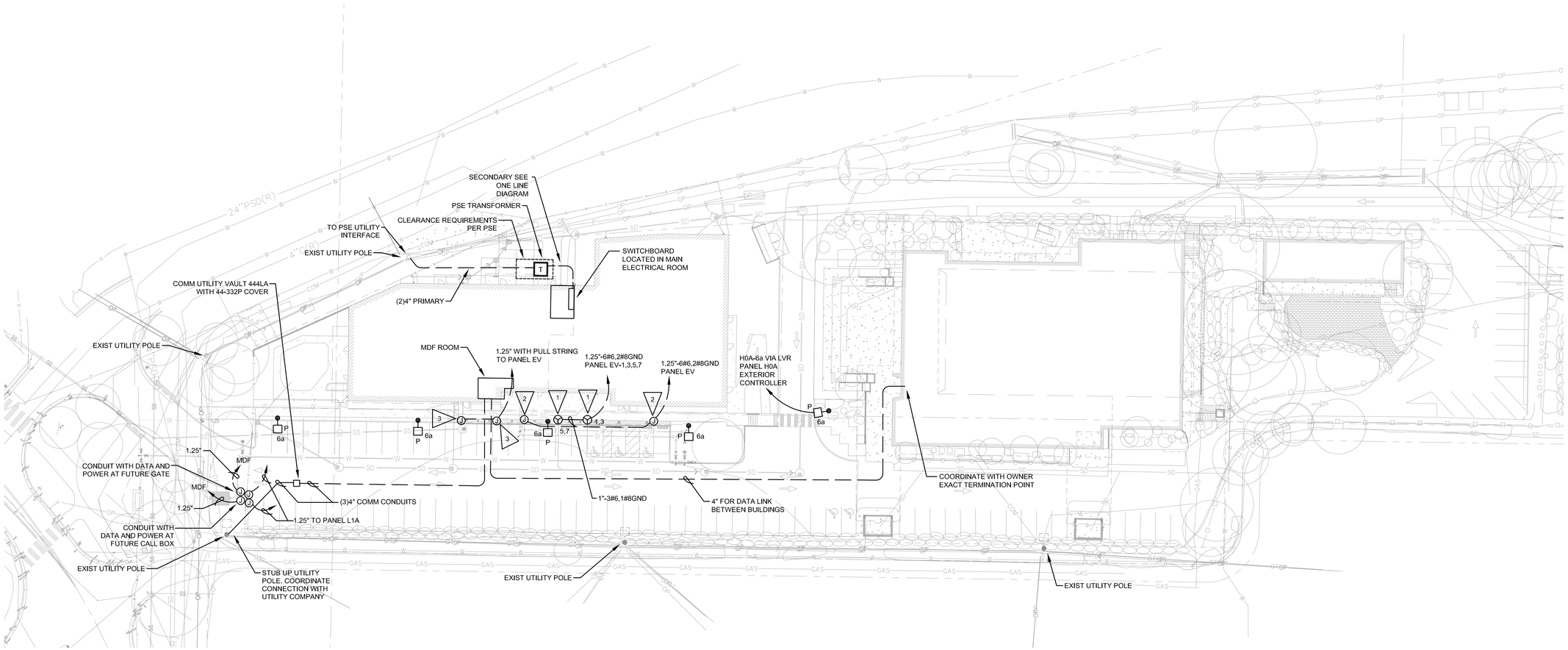

N 1 SITE PLAN - ELECTRICAL

SCALE: 1" = 30'-0"

TFWB ENGINEERS PLLC
Travis Fitzmaurice Wartelle Balangue Engineers Inc.
1200 Westlake Ave. N., #509
Seattle, WA 98109
p: 206-285-7228 | info@tf-wb.com

3427 BEACON AVE S
SEATTLE 98144
ANJALI@AGRANITDESIGN.COM
206-512-4209

KEVIN E. WARTELLE — STATE OF WASHINGTON — 44109 — REGISTERED PROFESSIONAL ENGINEER

NO.	DATE	DESCRIPTION
		4 JUNE 2025 BUILDING PERMIT

PROJECT: 23-101

SITE PLAN - ELECTRICAL

3700 E MERCER WAY
BARNABIE POINT PROJECT

E-101

D:\OCADrive\1 Ed_23-101E-101.dwg
02/05/25 7:03 PM

TFWB ENGINEERS INC.
Travis Fitzmaurice Wartelle Balangue Engineers Inc.
1200 Westlake Ave. N., #509
Seattle, WA 98109
p: 206-285-7228 | info@tf-wb.com

3427 BEACON AVE S
SEATTLE 98144
ANJALI@AGRANTDESIGN.COM
206-512-4209
anjali grant design LLC

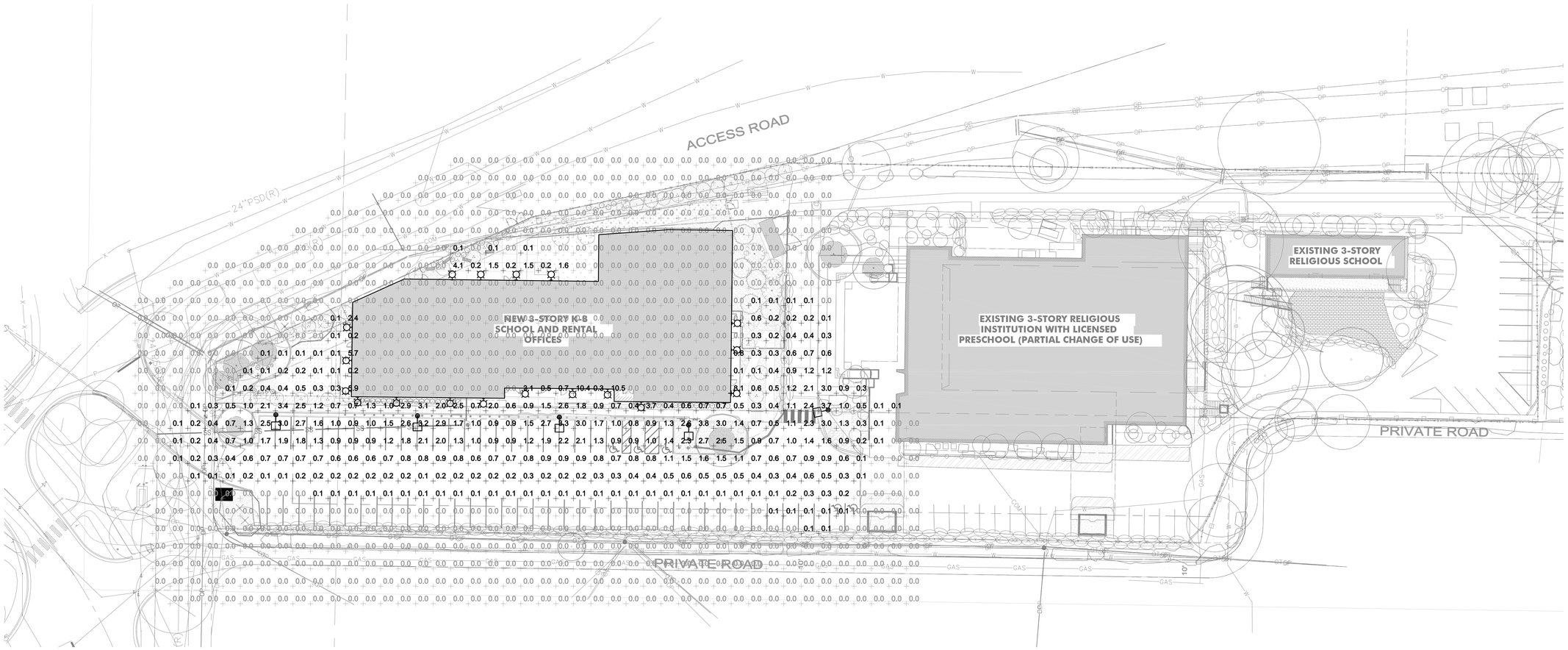

1 SITE PLAN - LIGHT CALC
SCALE: 1" = 30'-0"

3700 E MERCER WAY
BARNABIE POINT PROJECT

NO.	DATE	DESCRIPTION
	4 JUNE 2025	BUILDING PERMIT

PROJECT: 23-101

SITE PLAN - LIGHT CALC

E-102

TFWB ENGINEERS INC
Travis Fitzmaurice Wartelle
Balangue Engineers Inc.
1200 Westlake Ave. N., #509
Seattle, WA 98109
p: 206-285-7228 | info@tf-wb.com

3427 BEACON AVE S
SEATTLE 98144
ANJALI@AGRANTDESIGN.COM
206-512-4209
anjali grant design LLC



1 **LEVEL B01 FLOOR PLAN - LIGHTING**
1/8" = 1'-0"

NO	DATE	DESCRIPTION
	4 JUNE 2025	BUILDING PERMIT

PROJECT: **23-101**

3700 E MERCER WAY
BARNABIE POINT PROJECT

B01 FLOOR PLAN - LIGHTING

E-200

12/12/2025 3:38:37 PM Autodesk Docs://HNT K-8/HNT_School Building_Elec_R24.rvt
© ANJALI GRANT DESIGN LLC - ORIGINAL SHEET SIZE: 24" X 36"

TFWB ENGINEERS INC
Travis Fitzmaurice Wartelle
Balangue Engineers Inc.
1200 Westlake Ave. N., #509
Seattle, WA 98109
p: 206-285-7228 | info@tf-wb.com

3427 BEACON AVE S
SEATTLE 98144
ANJALI@AGRANTDESIGN.COM
206-512-4209
anjali grant design LLC



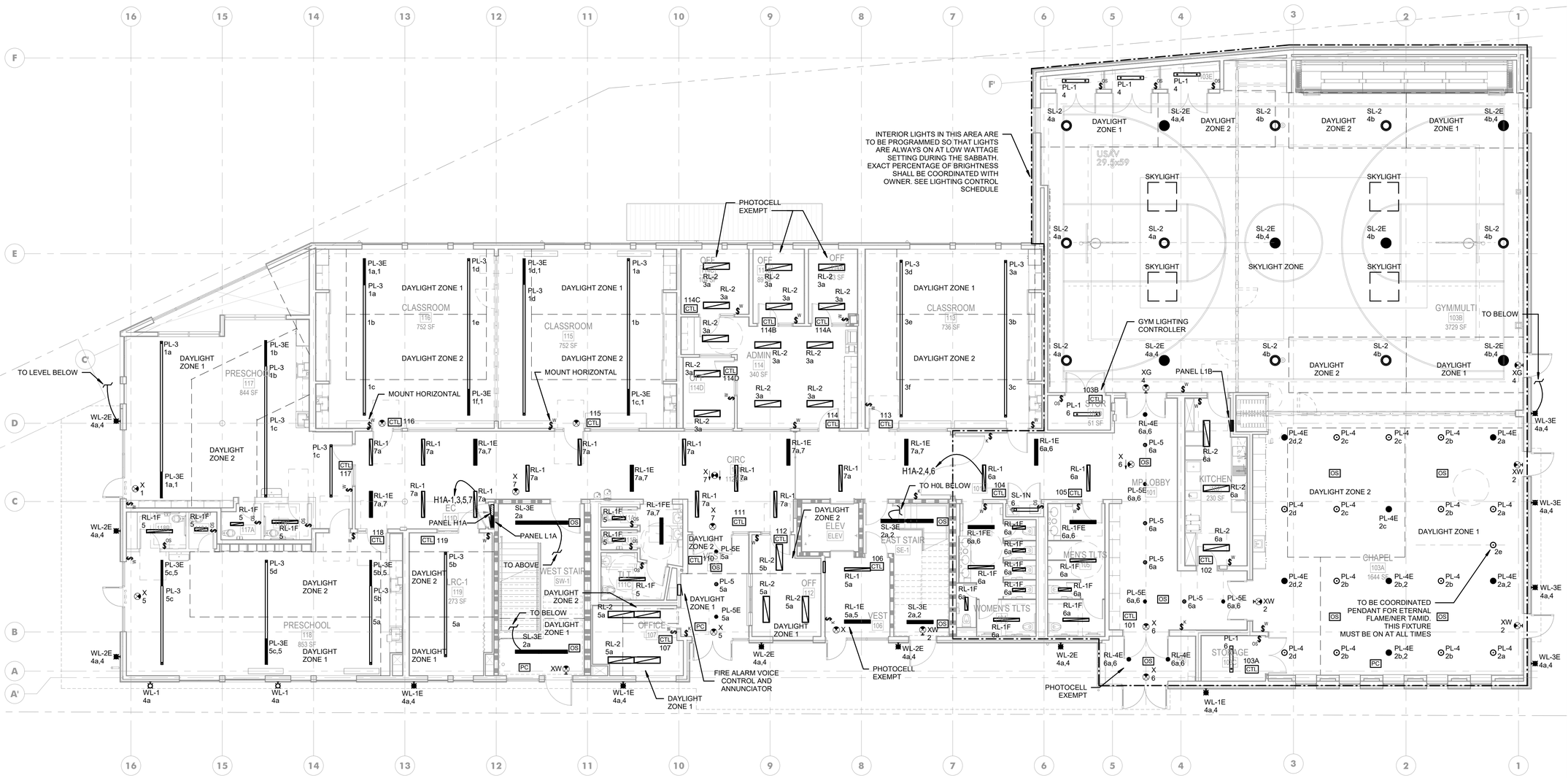

1 LEVEL 01 FLOOR PLAN - LIGHTING

1/8" = 1'-0"

NO	DATE	DESCRIPTION
	4 JUNE 2025	BUILDING PERMIT

PROJECT: 23-101

LEVEL 01 FLOOR PLAN - LIGHTING

E-201

3700 E MERCER WAY
BARNABIE POINT PROJECT

12/12/2025 3:38:38 PM Autodesk Docs://HNT K-8/HNT_School Building_Rvt_R24.rvt
© ANJALI GRANT DESIGN LLC ORIGINAL SHEET SIZE: 24" X 36"

TFWB ENGINEERS INC
Travis Fitzmaurice Wartelle
Balangue Engineers Inc.
1200 Westlake Ave. N., #509
Seattle, WA 98109
p: 206-285-7228 | info@tf-wb.com

3427 BEACON AVE S
SEATTLE 98144
ANJALI@AGRANTDESIGN.COM
206-512-4209
anjali grant design LLC

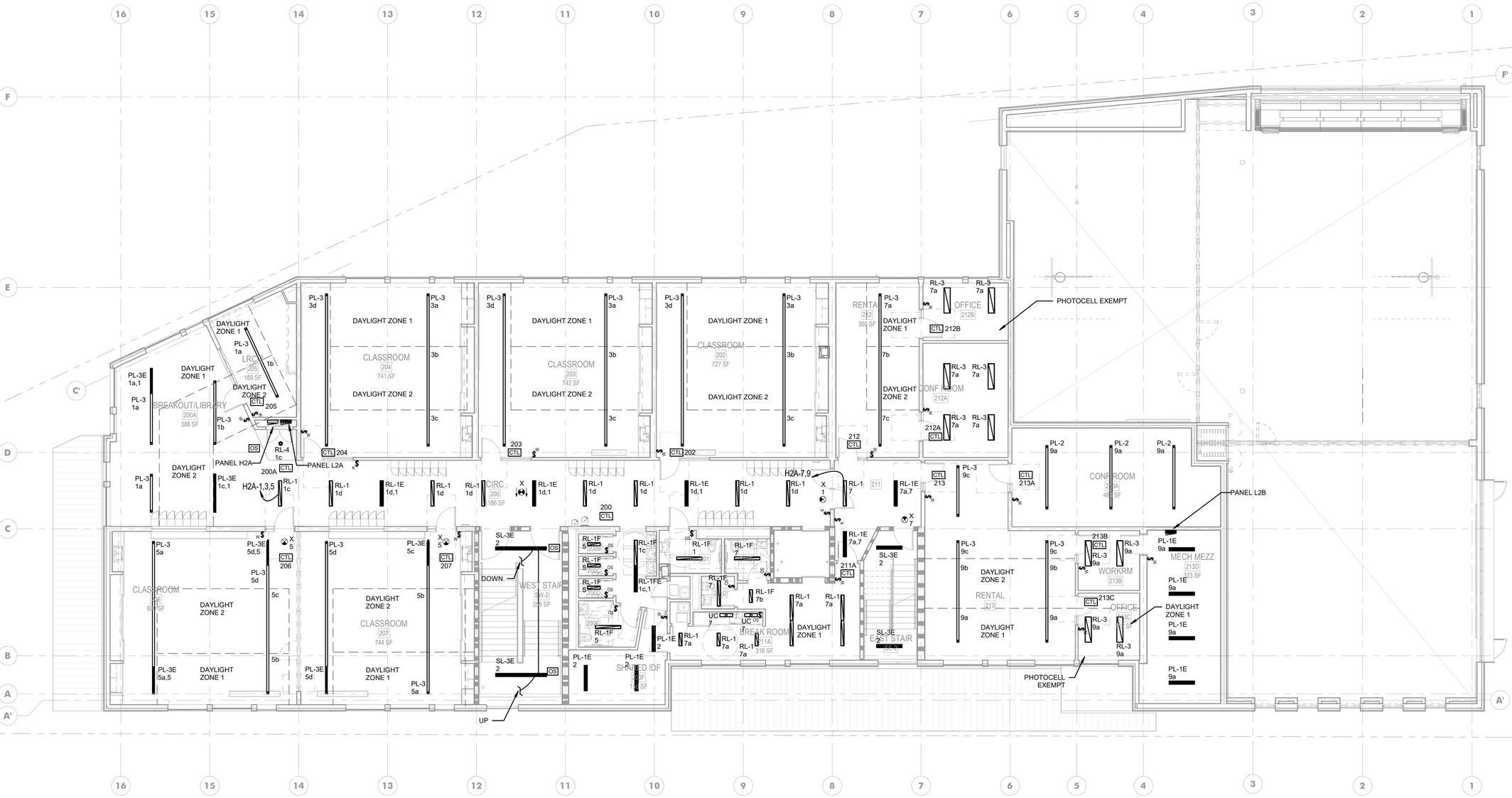

1 LEVEL 02 FLOOR PLAN - LIGHTING

1/8" = 1'-0"

3700 E MERCER WAY
BARNABIE POINT PROJECT

NO	DATE	DESCRIPTION
	4 JUNE 2025	BUILDING PERMIT

PROJECT: 23-101

LEVEL 02 FLOOR PLAN - LIGHTING

E-202

12/12/2025 3:38:40 PM Autodesk Docs://HNT K-8/HNT_School Building_Elec_R24.rvt
© ANJALI GRANT DESIGN LLC ORIGINAL SHEET SIZE: 24" X 36"

TFWB ENGINEERS INC
Travis Fitzmaurice Wartelle
Balangue Engineers Inc.
1200 Westlake Ave. N., #509
Seattle, WA 98109
p: 206-285-7228 | info@tf-wb.com

3427 BEACON AVE S
SEATTLE 98144
ANJALI@AGRANTDESIGN.COM
206-512-4209
anjali grant design LLC

KEVIN E. WARTELLE
STATE OF WASHINGTON
44199
REGISTERED PROFESSIONAL ENGINEER

3700 E MERCER WAY
BARNABIE POINT PROJECT

NO	DATE	DESCRIPTION
	4 JUNE 2025	BUILDING PERMIT

PROJECT: **23-101**

LEVEL 03 FLOOR PLAN - LIGHTING

E-203

1 LEVEL 03 FLOOR PLAN - LIGHTING
1/8" = 1'-0"

12/12/2025 3:38:44 PM Autodesk Docs://HNT K-JHNT_School Building_Elec_R24.rvt
© ANJALI GRANT DESIGN LLC ORIGINAL SHEET SIZE: 24" X 36"

TFWB ENGINEERS INC
Travis Fitzmaurice Wartelle
Balangue Engineers Inc.
1200 Westlake Ave. N., #509
Seattle, WA 98109
p: 206-285-7228 | info@tf-wb.com

3427 BEACON AVE S
SEATTLE 98144
ANJALI@AGRANTDESIGN.COM
206-512-4209
anjali grant design LLC

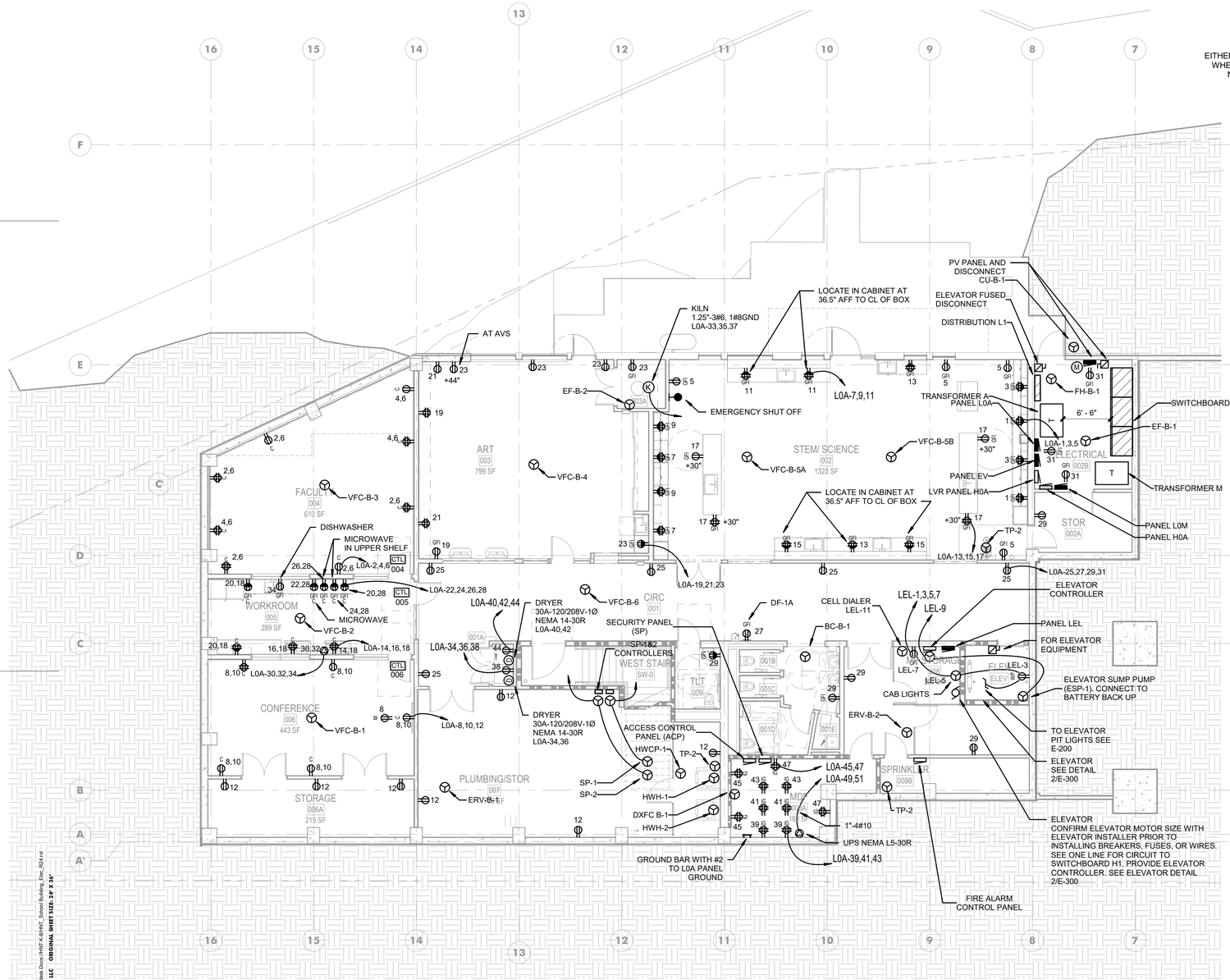

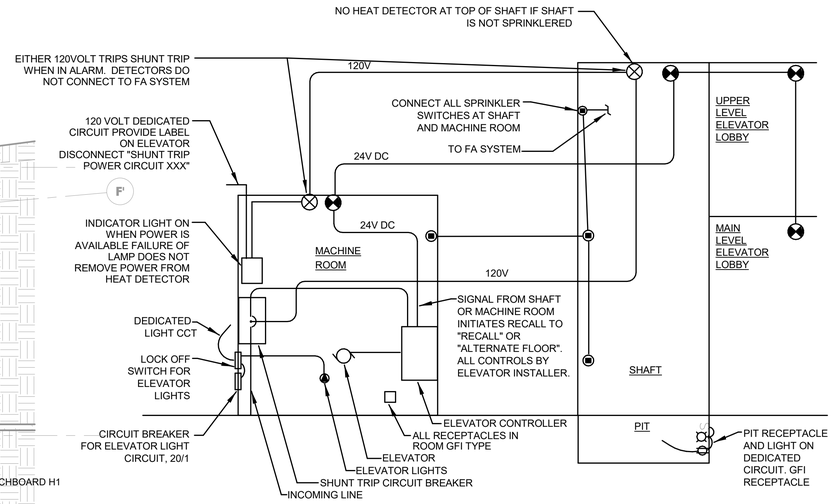

2 ELEVATOR DETAIL
1/8" = 1'-0"

3700 E MERCER WAY
BARNABIE POINT PROJECT

NO	DATE	DESCRIPTION
	4 JUNE 2025	BUILDING PERMIT

PROJECT: 23-101

B01 FLOOR PLAN - POWER

E-300

12/12/2025 3:38:44 PM Autodesk Docs://HNT K-8/HNT_School Building_Elec_R24.rvt
© ANJALI GRANT DESIGN LLC ORIGINAL SHEET SIZE: 24" X 36"

TFWB ENGINEERS INC
Travis Fitzmaurice Wartelle
Balangue Engineers Inc.
1200 Westlake Ave. N., #509
Seattle, WA 98109
p: 206-285-7228 | info@tf-wb.com

3427 BEACON AVE S
SEATTLE 98144
ANJALI@AGRANTDESIGN.COM
206-512-4209
anjali grant design LLC

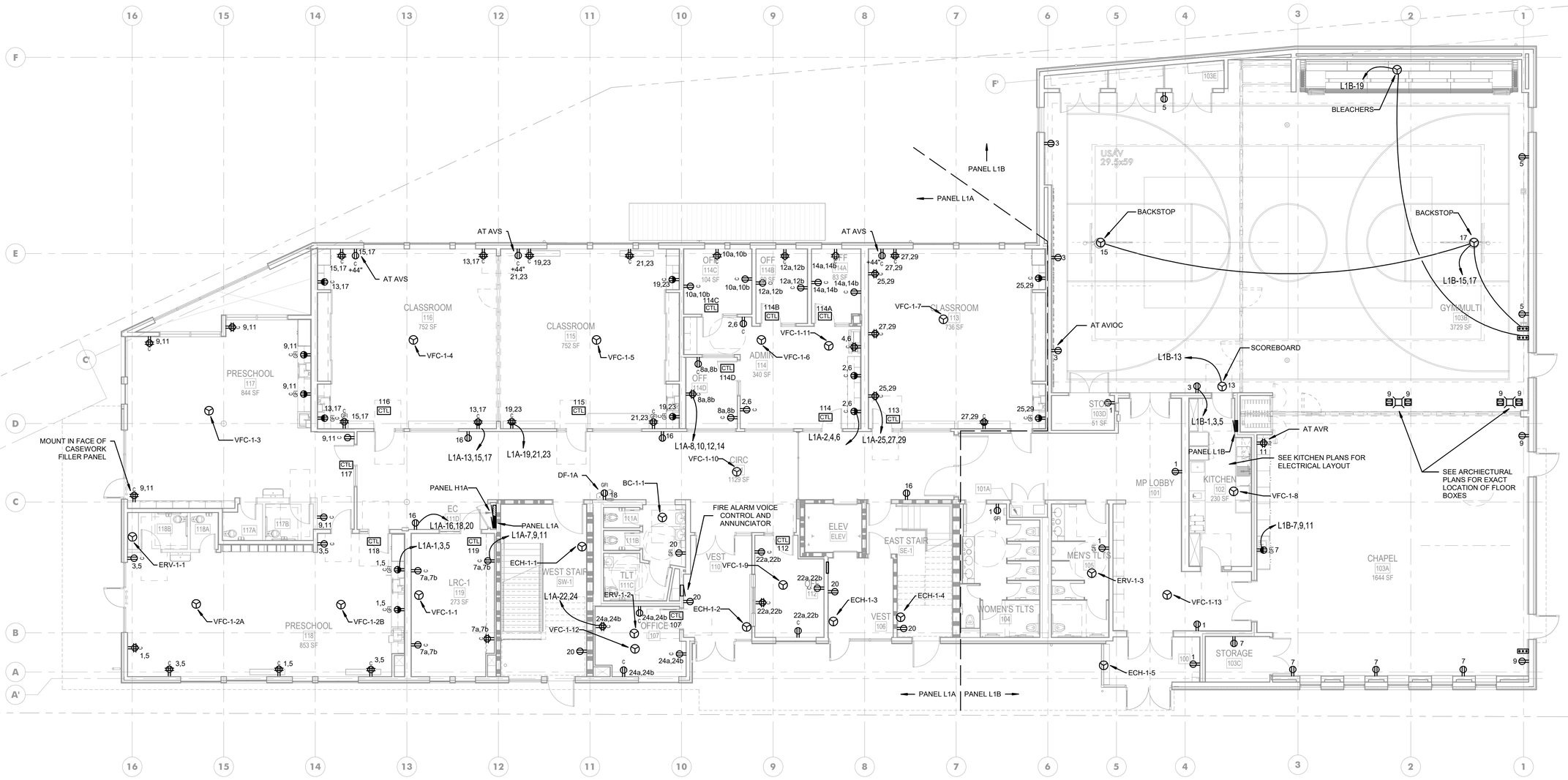

1 LEVEL 01 FLOOR PLAN - POWER

1/8" = 1'-0"

12/12/2025 3:38:45 PM Autodesk Docs://NHT K-8 NHT_School Building_Elec_R24.rvt
© ANJALI GRANT DESIGN LLC ORIGINAL SHEET SIZE: 24" X 36"

KEVIN E. WARTELLE
STATE OF WASHINGTON
44199
REGISTERED
PROFESSIONAL ENGINEER

3700 E MERCER WAY
BARNABIE POINT PROJECT

NO	DATE	DESCRIPTION
	4 JUNE 2025	BUILDING PERMIT

PROJECT: **23-101**

LEVEL 01 FLOOR PLAN - POWER

E-301

TFWB ENGINEERS INC
Travis Fitzmaurice Wartelle
Balangue Engineers Inc.
1200 Westlake Ave. N., #509
Seattle, WA 98109
p: 206-285-7228 | info@tf-wb.com

3427 BEACON AVE S
SEATTLE 98144
ANJALI@AGRANTDESIGN.COM
206-512-4209
anjali grant design LLC



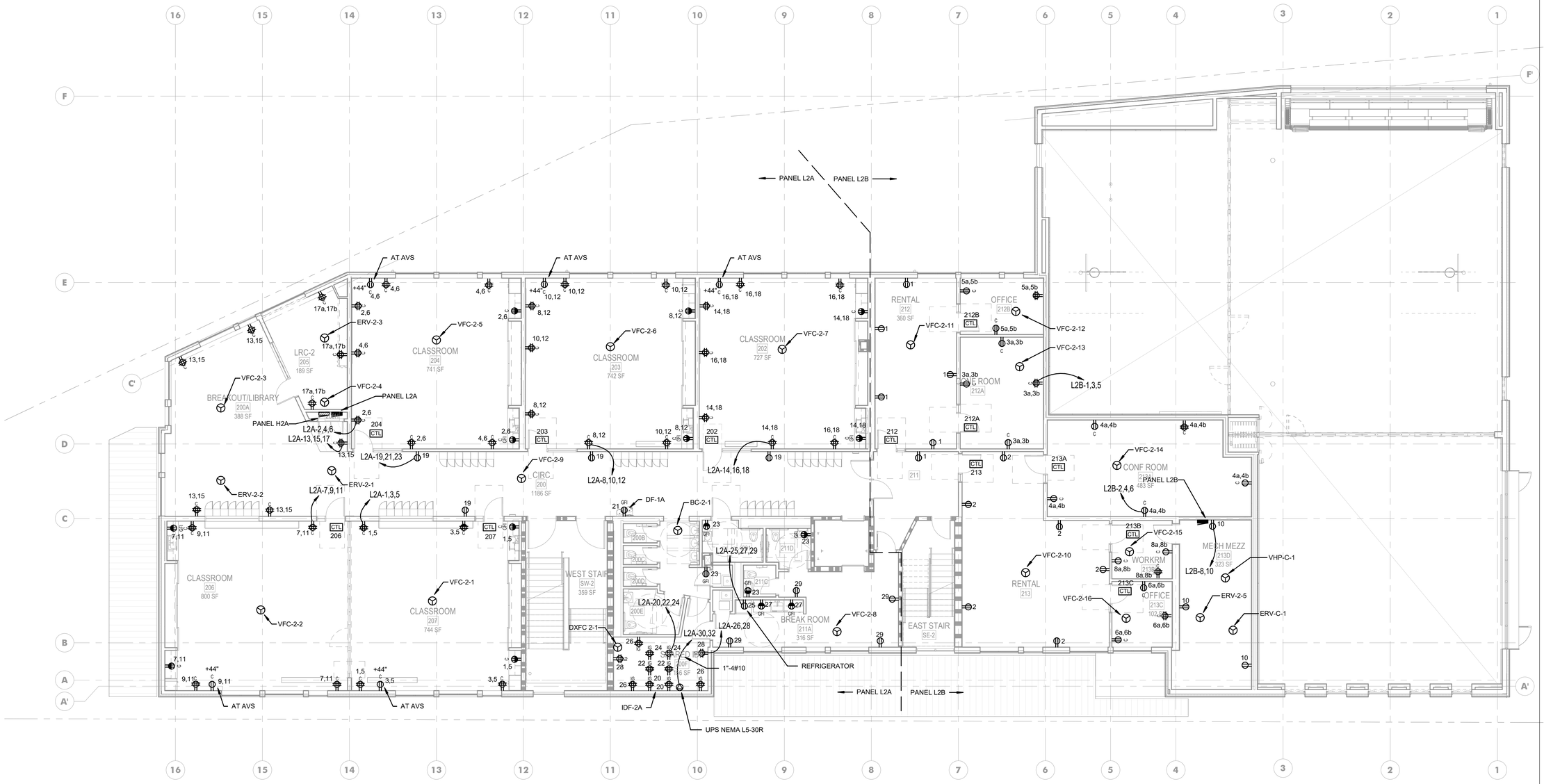

1 LEVEL 02 FLOOR PLAN - POWER

1/8" = 1'-0"

3700 E MERCER WAY
BARNABIE POINT PROJECT

NO	DATE	DESCRIPTION
	4 JUNE 2025	BUILDING PERMIT

PROJECT: 23-101

LEVEL 02 FLOOR PLAN - POWER

E-302

12/12/2025 3:38:41 PM Autodesk Docs://NXT K-8/NXT_School Building_Elec_R24.rvt
© ANJALI GRANT DESIGN LLC ORIGINAL SHEET SIZE: 24" X 36"

TFWB ENGINEERS INC
Travis Fitzmaurice Wartelle
Balangue Engineers Inc.
1200 Westlake Ave. N., #509
Seattle, WA 98109
p: 206-285-7228 | info@tf-wb.com

3427 BEACON AVE S
SEATTLE 98144
ANJALI@AGRANTDESIGN.COM
206-512-4209
anjali grant design LLC

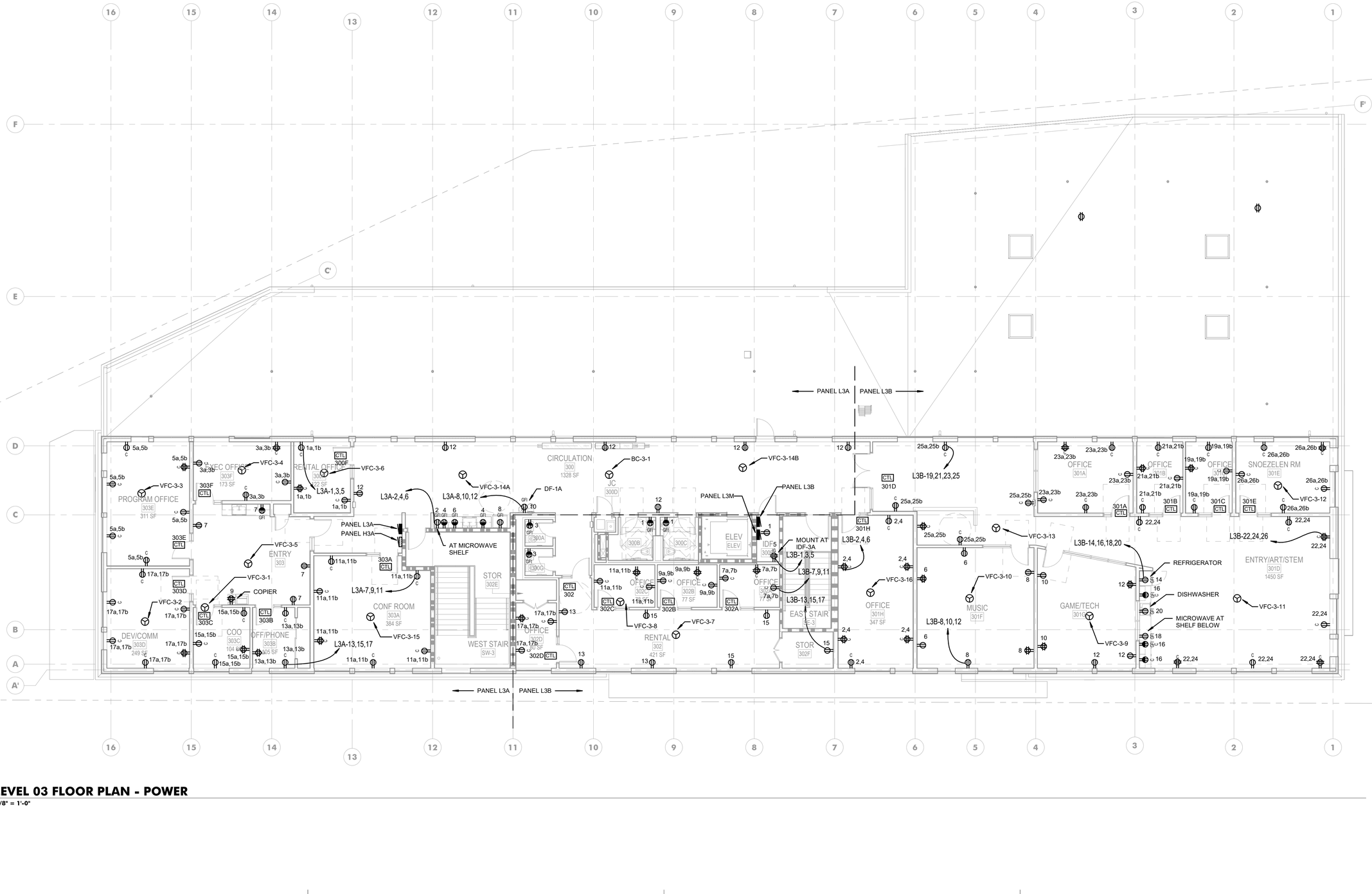

1 LEVEL 03 FLOOR PLAN - POWER

1/8" = 1'-0"

12/12/2025 3:39:47 PM Autodesk Docs://HNT K-8/HNT_School Building_Elec_R24.rvt
© ANJALI GRANT DESIGN LLC ORIGINAL SHEET SIZE: 24" X 36"

3700 E MERCER WAY
BARNABIE POINT PROJECT

NO	DATE	DESCRIPTION
	4 JUNE 2025	BUILDING PERMIT

PROJECT: **23-101**

LEVEL 03 FLOOR PLAN - POWER

E-303

SHEET NOTE:

PROVIDE FULLY IN STALLED SOLAR SYSTEM SIZED BASED ON BUILDING SQUARE FOOTAGE. 43,302SQFT X 0.5 = 21,651 WATT SOLAR SYSTEM MINIMUM. PROVIDE SOLAR READY ZONE ON 40% OF ROOF AREA. MAINTAIN SPACE FOR 4' PERIMETER PATHWAYS AROUND EDGES OF ROOF. SEE ROOF PLAN FOR PROPOSED AREAS.

TFWB ENGINEERS INC

Travis Fitzmaurice Wartelle Balangue Engineers Inc.
1200 Westlake Ave. N., #509
Seattle, WA 98109

p: 206-285-7228 | info@tf-wb.com

3427 BEACON AVE S
SEATTLE 98144
ANJALI@AGRANTDESIGN.COM
206-512-4209

anjali grant design LLC

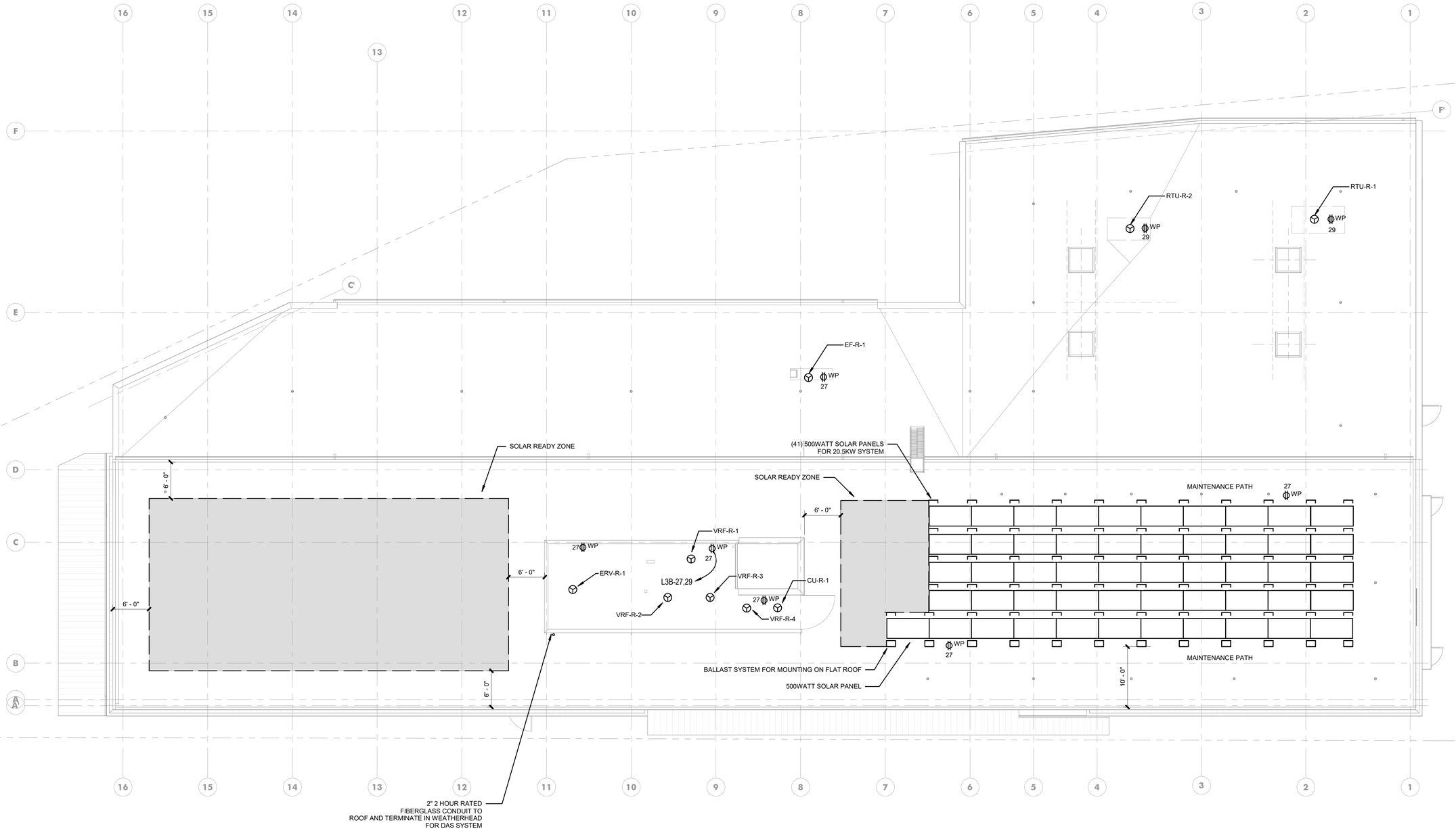

1 ROOF PLAN - ELECTRICAL

1/8" = 1'-0"

KEVIN E. WARTELLE — STATE OF WASHINGTON — 44109 — REGISTERED PROFESSIONAL ENGINEER

3700 E MERCER WAY
BARNABIE POINT PROJECT

NO	DATE	DESCRIPTION
1	10/22/2025	BLDG PERMIT CORRECTIONS

4 JUNE 2025
BUILDING PERMIT

PROJECT: 23-101

ROOF PLAN - POWER

E-304

12/12/2025 3:38:49 PM Autodesk Docs://HNT K-shNT_School Building_Elec_R24.rvt
© ANJALI GRANT DESIGN LLC ORIGINAL SHEET SIZE: 24" X 36"

Item No	PROVIDED BY: KEC	GC	OWNER	Quantity	Description	Manufacturer / Model #	ELECTRICAL: KW	Amps	HP	Voltage	Phase	Connection	PLUMBING: Hot	Cold	Waste	Notes
1	X			1	DRY STORAGE SHELVING	OLYMPIC CHROME WIRE										
2	X			1	ICE MACHINE	HOSHIZAKI KM-116BAJ		5.5		115	1	DCO			1 1/2"	INDIRECT WASTE, CONNECT TO ITEM #3
3	X			1	WATER FILTRATION SYSTEM	HOSHIZAKI H9320-51								3/4"		
4					SPARE NUMBER											
5	X			1	STAINLESS STEEL TABLE WITH PREP / HAND SINK	CUSTOM STAINLESS STEEL									1 1/2"	INDIRECT WASTE / DIRECT WASTE
6	X			2	FAUCET	T&S B-231 / B-0314							1/2"	1/2"		
7	X			2	STAINLES STEEL WALL SHELF	CUSTOM STAINLESS STEEL										
8			X	2	COFFEE BREWER	OWNER		X		115	1	DCO		1/2"		VERIFY REQUIREMENTS WITH OWNER
9	X			2	MOBILE HEATED CABINET	CRES COR CO-151-F-1818D		39.0		208	1	SCO				NEMA 6-50P
10	X			1	WIRE SHELVING UNIT	OLYMPIC CHROME WIRE										
11					SPARE NUMBER											
12					SPARE NUMBER											
13					SPARE NUMBER											
14					SPARE NUMBER											
15					SPARE NUMBER											
16					SPARE NUMBER											
17					SPARE NUMBER											
18					SPARE NUMBER											
19					SPARE NUMBER											
20	X			1	SOILED DISH TABLE WITH THREE COMPARTMENT SINK	JOHN BOOS DT3B18244-2D18L									2"	DIRECT WASTE
21	X			1	SLANT RACK SHELF	JOHN BOOS PB-SRW-42										
22	X			2	PRE-RINSE FAUCET	T&S B-0133-12CRBJST							1/2"	1/2"		
23	X			1	DISHWASHER	JACKSON CONSERVER XL-HH		10.0		120	1	DCO			2"	INDIRECT WASTE, VERIFY REQUIREMENTS WITH OWNER
24		X		1	GREASE INTERCEPTOR	GENERAL CONTRACTOR										
25	X			1	CLEAN DISH TABLE	JOHN BOOS JDTC-20-24R										
26	X			1	CLEAN DISH STORAGE SHELVING	OLYMPIC CHROME GREEN										
27	X			1	REACH-IN REFRIGERATOR	DELFIELD 6025XL-S		4.2		115	1	DCO				NEMA 5-15P
28	X			1	ROLL IN REFRIGERATOR	DELFIELD GARRI1P-S		6.0		115	1	DCO				NEMA 5-15P

General Notes

1. THE ELECTRICAL CONTRACTOR SHALL SUPPY AND INSTALL SEAL-TITE FLEX CONDUIT TO ALL FOOOD SERVICE EQUIPMENT IN DAMP AREAS, I.E. SCULLERY, BAR, ROOF, ETC. FLEX CONNECTIONS AT ALL FANS ON THE ROOF SHALL BE OF EXTRA LENGTH TO ALLOW FULL FAN REMOVAL FOR THE EASE OF CLEANING.
2. THE ELECTRICAL CONTRACTOR SHALL PROVIDE FUSED DISCONNECTS FOR EQUIPMENT HOOK-UPS AS REQUIRED BY CODE AND LABELING.
3. THE ELECTRICAL CONTRACTOR SHALL PROVIDE AND INSTALL A 48" MINIMUM CORD AND PLUG FOR EACH PIECE OF EQUIPMENT SO NOTED. USE 90 DEGREE ELBOW OUT OF UNIT.
4. THE ELECTRICAL CONTRACTOR SHALL PROVIDE FOR HOOK-UP OF A THERMOSTAT, SOLENOID, BLOWER COIL AND COMPRESSOR FOR EACH REFRIGERATED UNIT. MAGNETIC STARTERS AND/OR THERMAL PROTECTORS SHALL BE INCLUDED AS NECESSARY.
5. THE ELECTRICAL CONTRACTOR SHALL PROVIDE 1" CONDUIT AND JUNCTION BOXES AT EACH CASH REGISTER TERMINAL SO AS TO INTERCONNECT ALL UNITS TO EACH OTHER AND TO THE CENTRAL PROCESSING TERMINAL. CONSULT WITH THE OWNER'S REPRESENTATIVE FOR EXACT LOCATIONS OF ALL TIE-IN UNITS.
6. IT SHALL BE THE RESPONSIBILITY OF THE PLUMBING AND ELECTRICAL CONTRACTORS TO MAKE ALL REQUIRED WATER, GAS, DRAIN AND ELECTRICAL CONNECTIONS FOR ALL MAKE-UP AIR SYSTEM UNITS.
7. THE GENERAL CONTRACTOR SHALL PHOTOGRAPH ALL WALLS CONTAINING BACKING PRIOR TO SHEETROCK / FRP INSTALLATION.
8. THE PLUMBING CONTRACTOR SHALL SUPPLY AND INSTALL WATER LINE BACK CHECK VALVES AS REQUIRED PER CODE.
9. COMMUNICATION CABLES ARE SUPPLIED AND INSTALLED BY ELECTRICAL CONTRACTOR.
10. IT SHALL BE THE RESPONSIBILITY OF THE ELECTRICAL CONTRACTOR TO INSTALL ALL OWNER SUPPLIED COMPUTER / COMMUNICATION CABLES AS PER OWNERS DIRECTION.

General Notes

- IT SHALL BE THE RESPONSIBILITY OF THE GENERAL CONTRACTOR AND ALL SUB-CONTRACTORS TO VERIFY THE ACTUAL SPACE AND MECHANICALREQUIREMENTS OF ALL ITEMS SHOW AS FUTURE, N.I.C., SUPPLIED BY "OTHERS", ETC. WITH THE OWNER PRIOR TO ROUGH-IN AND CONNECTION
- THE GENERAL CONTRACTOR SHALL IMMEDIATELY INFORM CMA RESTAURANT SUPPLY & DESIGN PROJECT MANAGER AND THE OWNER OF ANY RED LINES, CORRECTIONS, ETC. ON THE PERMIT PLANS AND OF ANY INSPECTION CORRECTIONS REQUESTED CONCERNING THESE DRAWINGS OR EQUIPMENT AS LISTED FOR THIS PROJECT.
- THE GENERAL CONTRACTOR SHALL PROPERLY SEAL ALL WALL AND FLOOR PENETRATIONS AFTER THE INSTALLATION OF RELATED EQUIPMENT AND FURNISHING.
- IT SHALL BE NOTED BY THE GENERAL CONTRACTOR AND ALL SUB-CONTRACTORS THAT THIS SET OF PLANS AND THE INFORMATION CONTAINED WITH-IN IN NOW WAY RELIEVES SAID PARTIES OF THEIR RESPONSIBILITIY TO INVESTIGATE AND COMPLY WITH ALL APPLICABLE CODES AND ORDINANCES, AND TO PERFORM ALL WORK TO THE HIGHEST STANDARDS.
- SUITABLE WALL BACKING AS SHOWN ON THESE PLANS AND AS REQUIRED BY THE OWNER SHALL BE PROVIDED AND INSTALLED BY THE GENERAL CONTRACTOR.
- THESE PLANS SHALL BE READ IN CONJUNCTION WITH THE EQUIPMENT CUT SHEET BOOK SUPPLIED BY CMA RESTAURANT SUPPLY & DESIGN, INC. AND BY THIS REFERENCE IS MADE A PART HEROF.

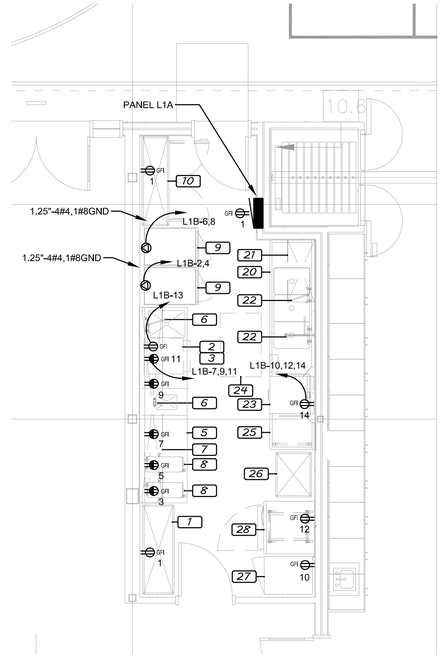

1 KITCHEN PLAN - ELECTRICAL
SCALE: 1/4" = 1'-0"

TFWB ENGINEERS INC
Travis Fitzmaurice Wartelle
Balangue Engineers Inc.
1200 Westlake Ave. N., #509
Seattle, WA 98109
p: 206-285-7228 | info@tf-wb.com

3427 BEACON AVE S
SEATTLE 98144
ANJALI@AGRANTIDESIGN.COM
206-512-4209

anjali grant design LLC

KEVIN E. WARTELLE — STATE OF WASHINGTON — 44109 — REGISTERED PROFESSIONAL ENGINEER

3700 E MERCER WAY
BARNABIE POINT PROJECT

NO.	DATE	DESCRIPTION
	4 JUNE 2025	BUILDING PERMIT

PROJECT: 23-101

KITCHEN PLAN - ELECTRICAL

E-305

D:\CAD\SHEET FILE - 23-101\E-305.dwg
6/4/2025 4:03:03 PM

TFWB ENGINEERS INC.
Travis Fitzmaurice Wartelle Balangue Engineers Inc.
1200 Westlake Ave. N., #509
Seattle, WA 98109
p: 206-285-7228 | info@tf-wb.com

3427 BEACON AVE S
SEATTLE 98144
ANJALI@AGRANTDESIGN.COM
206-512-4209

anjali grant design LLC

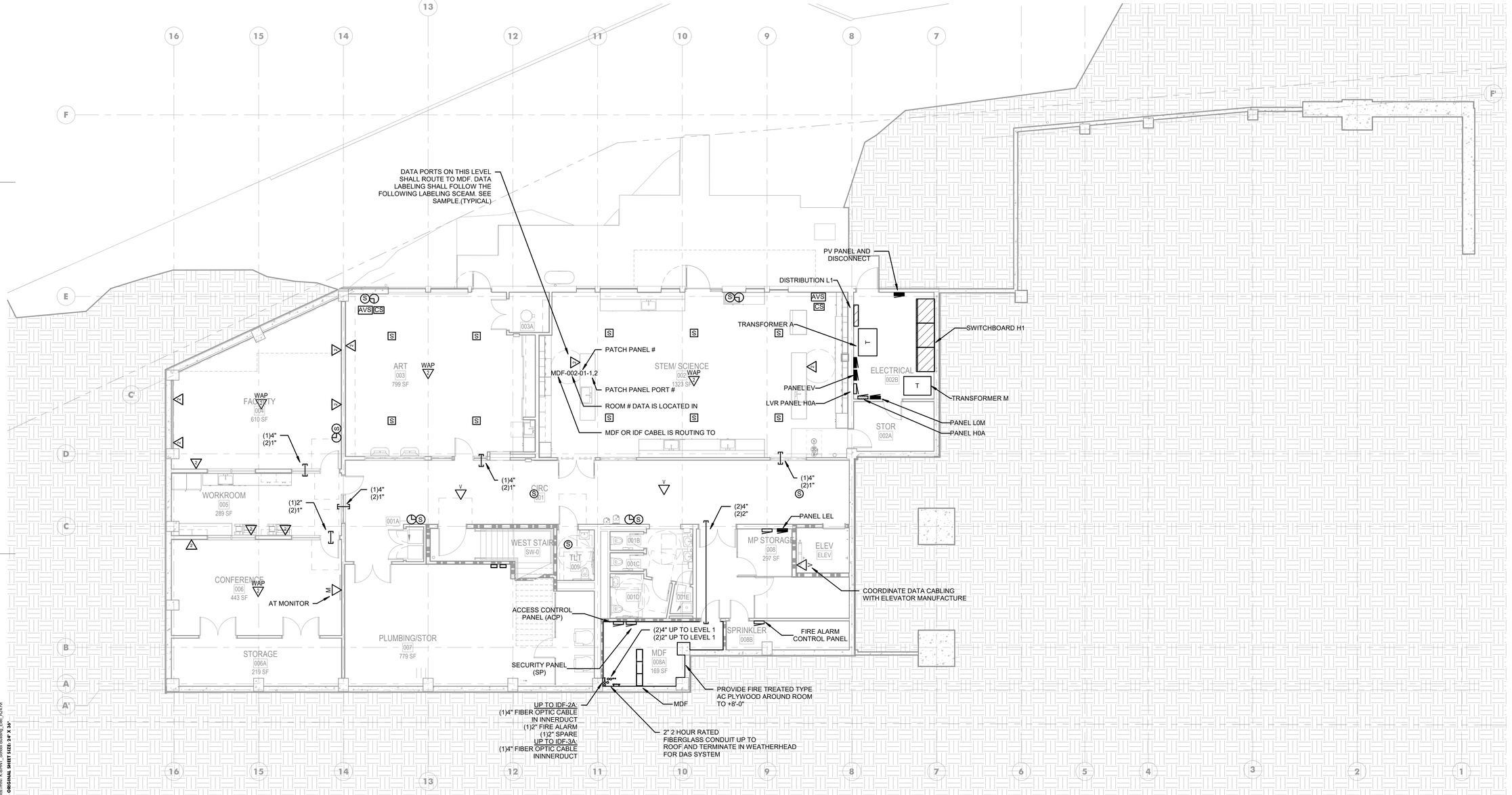

1 **LEVEL B01 FLOOR PLAN - COMM**
1/8" = 1'-0"

3700 E MERCER WAY
BARNABIE POINT PROJECT

NO	DATE	DESCRIPTION
1	10/22/2025	BLDG PERMIT CORRECTIONS

4 JUNE 2025
BUILDING PERMIT

PROJECT: 23-101

B01 FLOOR PLAN - COMM

E-400

12/12/2025 3:38:49 PM Autodesk Docs://HNT K-8/HNT_School Building_Elec_R24.rvt
© ANJALI GRANT DESIGN LLC - ORIGINAL SHEET SIZE: 24" X 36"

TFWB ENGINEERS INC
Travis Fitzmaurice Wartelle
Balangue Engineers Inc.
1200 Westlake Ave. N., #509
Seattle, WA 98109
p: 206-285-7228 | info@tf-wb.com

3427 BEACON AVE S
SEATTLE 98144
ANJALI@AGRANTDESIGN.COM
206-512-4209
anjali grant design LLC



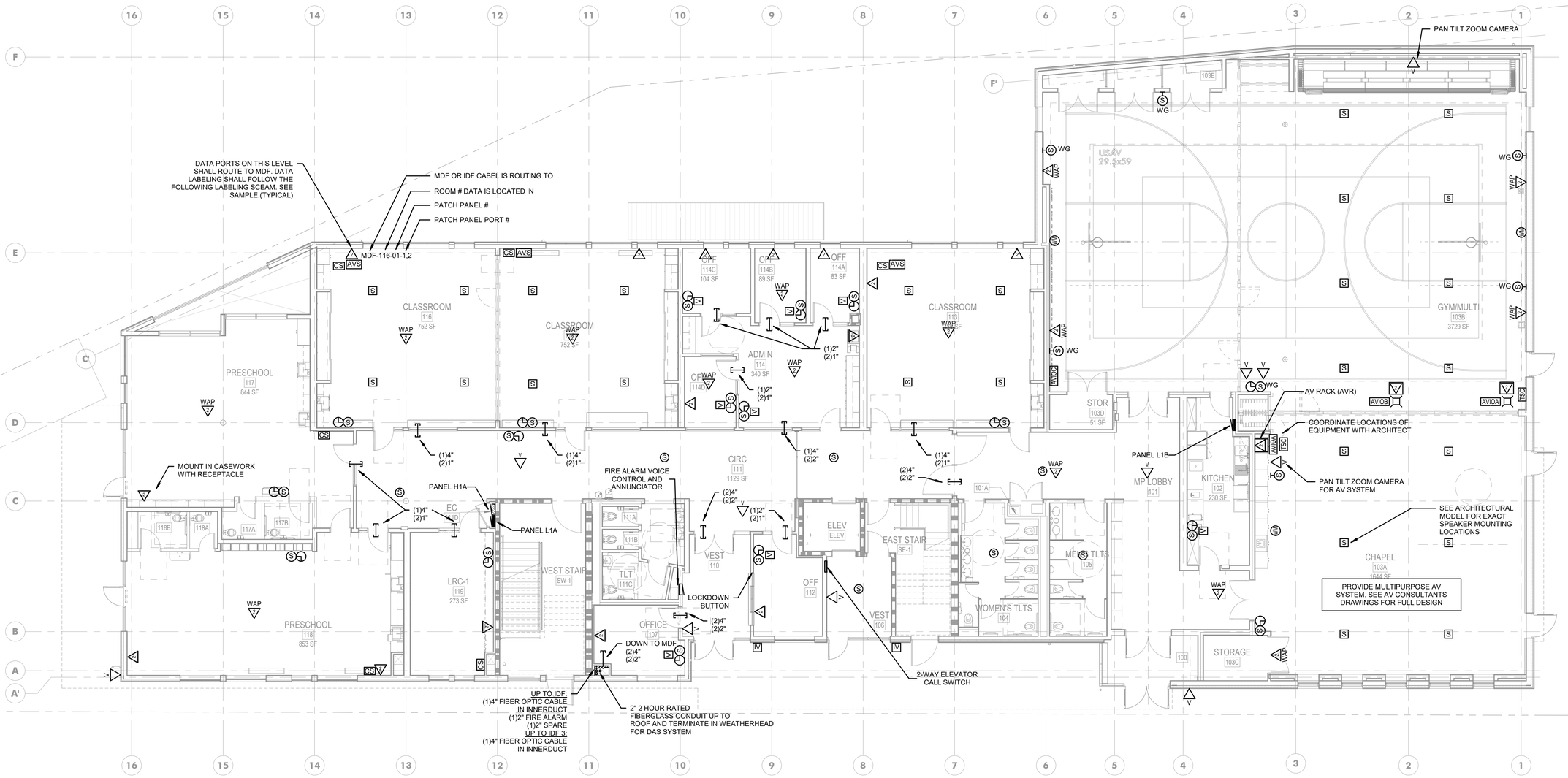

1 LEVEL 01 FLOOR PLAN - COMM

1/8" = 1'-0"

12/12/2025 3:38:50 PM Autodesk Docs://NIT K-8/NIT_School Building_Elec_R24.rvt

© ANJALI GRANT DESIGN LLC ORIGINAL SHEET SIZE: 24" X 36"

NO	DATE	DESCRIPTION
1	10/22/2025	BLDG PERMIT CORRECTIONS

4 JUNE 2025

BUILDING PERMIT

PROJECT: 23-101

3700 E MERCER WAY
BARNABIE POINT PROJECT

LEVEL 01 FLOOR PLAN - COMM

E-401

FLAG NOTES:

1 FOR ALL TENANT SPACES PROVIDE MUD RING WITH BLANK FACEPLATE, PULLSTRING AND CONDUIT TO ACT CEILING FOR FUTURE DATA. DATA WIRING TO BE INSTALLED BY TENANT.

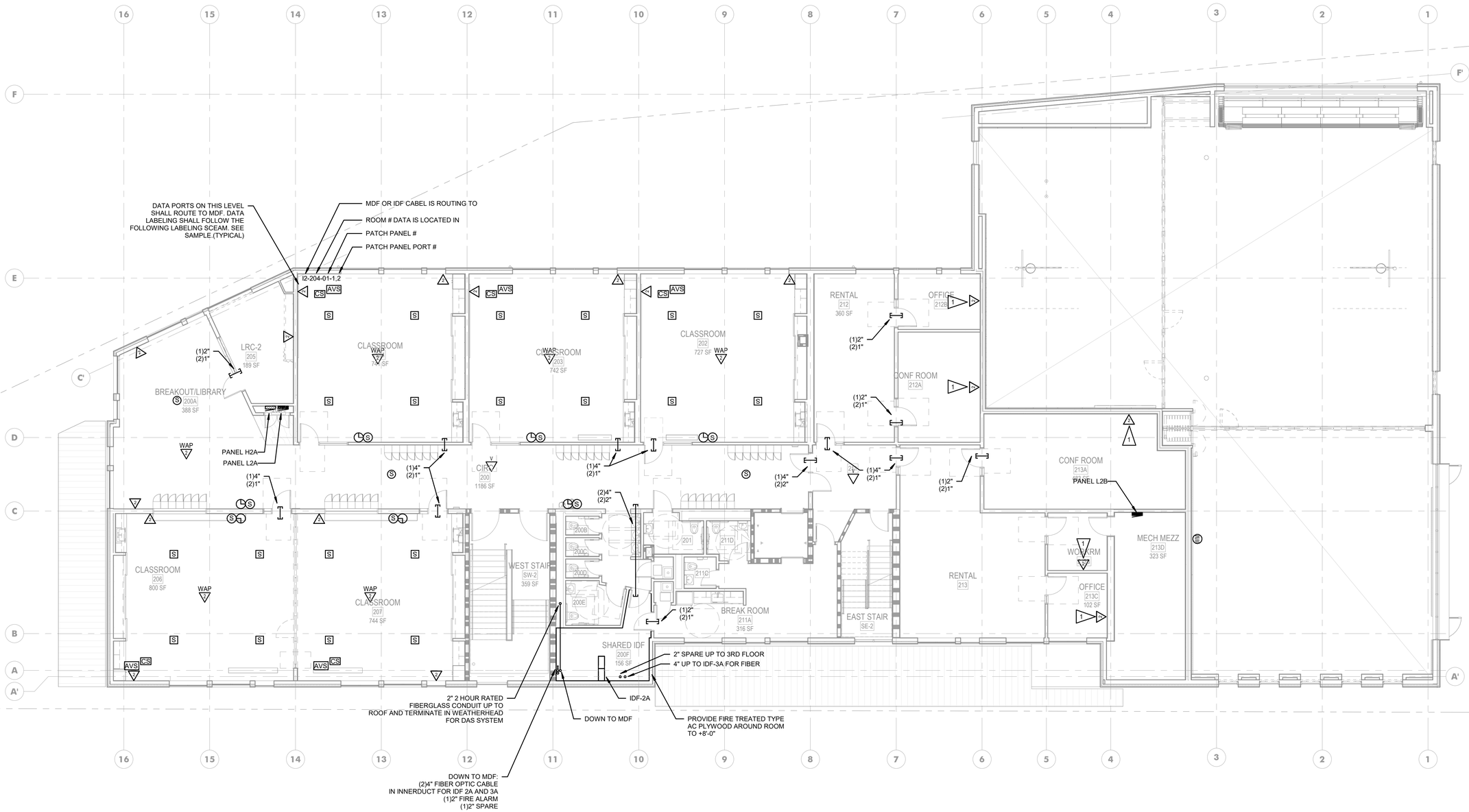

1 LEVEL 02 FLOOR PLAN - COMM

1/8" = 1'-0"

TFWB ENGINEERS INC

Travis Fitzmaurice Wartelle Balangue Engineers Inc.
1200 Westlake Ave. N., #509
Seattle, WA 98109

p: 206-285-7228 | info@tf-wb.com

3427 BEACON AVE S
SEATTLE 98144
ANJALI@AGRANTDESIGN.COM
206-512-4209

anjali grant design LLC

KEVIN E. WARTELLE — STATE OF WASHINGTON — 44109 — REGISTERED PROFESSIONAL ENGINEER

3700 E MERCER WAY
BARNABIE POINT PROJECT

NO	DATE	DESCRIPTION
1	10/22/2025	BLDG PERMIT CORRECTIONS

4 JUNE 2025
BUILDING PERMIT

PROJECT: **23-101**

LEVEL 02 FLOOR PLAN - COMM

E-402

12/12/2025 3:38:01 PM Autodesk Docs://NYF K-6NNT_School Building_Elec_R24.rvt
© ANJALI GRANT DESIGN LLC ORIGINAL SHEET SIZE: 24" X 36"

FLAG NOTES:

1 FOR ALL TENANT SPACES PROVIDE MUD RING WITH BLANK FACEPLATE, PULLSTRING AND CONDUIT TO ACT CEILING FOR FUTURE DATA. DATA WIRING TO BE INSTALLED BY TENANT.

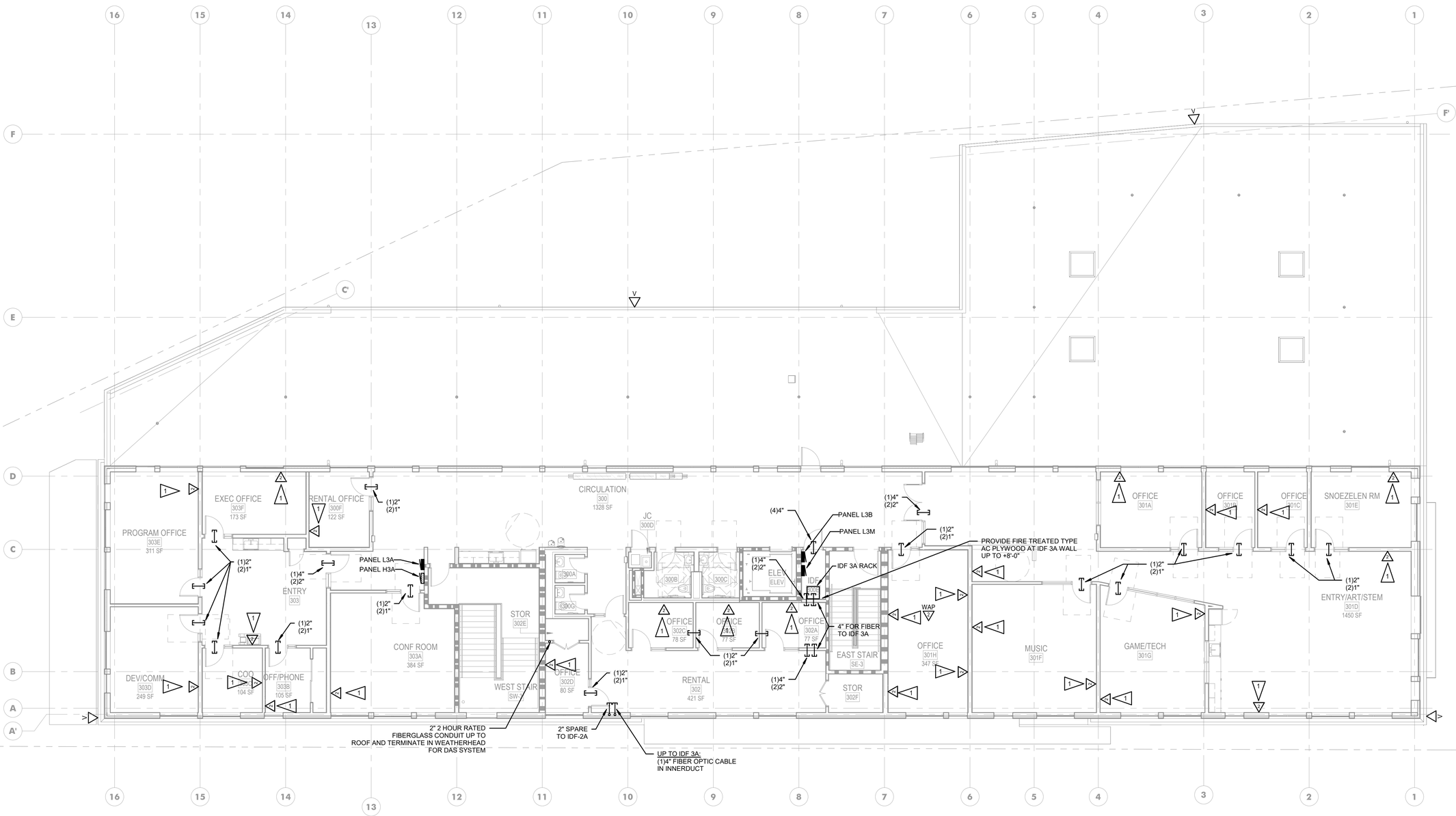

1 LEVEL 03 FLOOR PLAN - COMM

1/8" = 1'-0"

TFWB ENGINEERS INC

Travis Fitzmaurice Wartelle Balangue Engineers Inc.
1200 Westlake Ave. N., #509
Seattle, WA 98109

p: 206-285-7228 | info@tf-wb.com

3427 BEACON AVE S
SEATTLE 98144
ANJALI@AGRANTDESIGN.COM
206-512-4209

anjali grant design LLC

KEVIN E. WARTELLE — STATE OF WASHINGTON — 44109 — REGISTERED PROFESSIONAL ENGINEER

3700 E MERCER WAY
BARNABIE POINT PROJECT

NO	DATE	DESCRIPTION
1	10/22/2025	BLDG PERMIT CORRECTIONS

4 JUNE 2025
BUILDING PERMIT

PROJECT: 23-101

LEVEL 03 FLOOR PLAN - COMM

E-403

12/12/2025 3:38:53 PM Autodesk Docs://HNT K-8/HNT_School Building_Elec_R24.rvt
© ANJALI GRANT DESIGN LLC ORIGINAL SHEET SIZE: 24" X 36"

TFWB ENGINEERS INC
Travis Fitzmaurice Wartelle
Balangue Engineers Inc.
1200 Westlake Ave. N., #509
Seattle, WA 98109
p: 206-285-7228 | info@tf-wb.com

3427 BEACON AVE S
SEATTLE 98144
ANJALI@AGRANTDESIGN.COM
206-512-4209
anjali grant design LLC

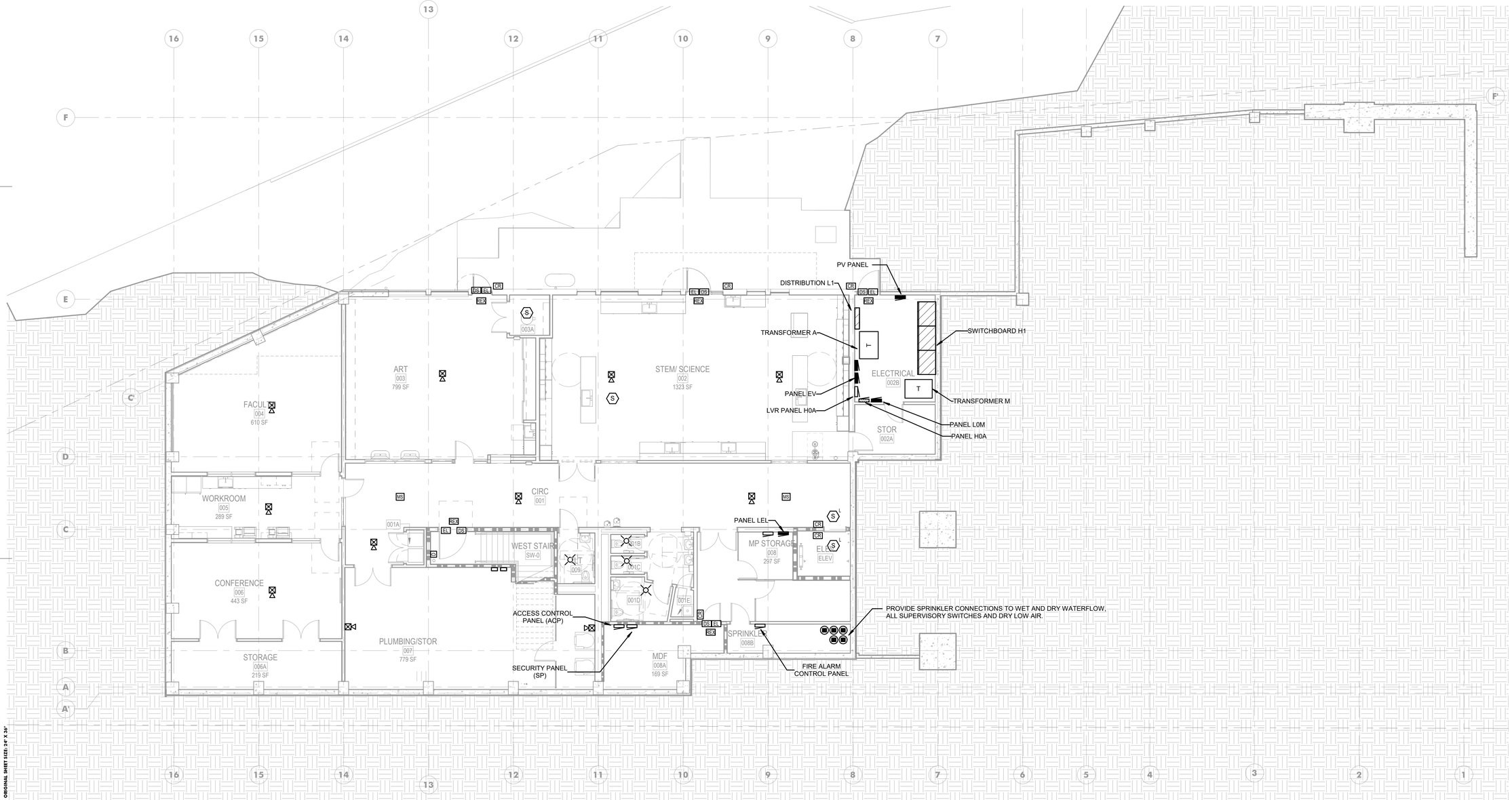

1 LEVEL B01 FLOOR PLAN - ESS
1/8" = 1'-0"

KEVIN E. WARTELLE
STATE OF WASHINGTON
22199
REGISTERED PROFESSIONAL ENGINEER

3700 E MERCER WAY
BARNABIE POINT PROJECT

NO	DATE	DESCRIPTION
1	10/22/2025	BLDG PERMIT CORRECTIONS

4 JUNE 2025
BUILDING PERMIT

PROJECT: 23-101

B01 FLOOR PLAN - ESS

E-500

12/12/2025 3:38:53 PM Autodesk Docs://HNT K-sHNT_School Building_Elec_R24.rvt
© ANJALI GRANT DESIGN LLC ORIGINAL SHEET SIZE: 24" X 36"

TFWB ENGINEERS INC
Travis Fitzmaurice Wartelle Balangue Engineers Inc.
1200 Westlake Ave. N., #509
Seattle, WA 98109
p: 206-285-7228 | info@tf-wb.com

3427 BEACON AVE S
SEATTLE 98144
ANJALI@AGRANTDESIGN.COM
206-512-4209
anjali grant design LLC



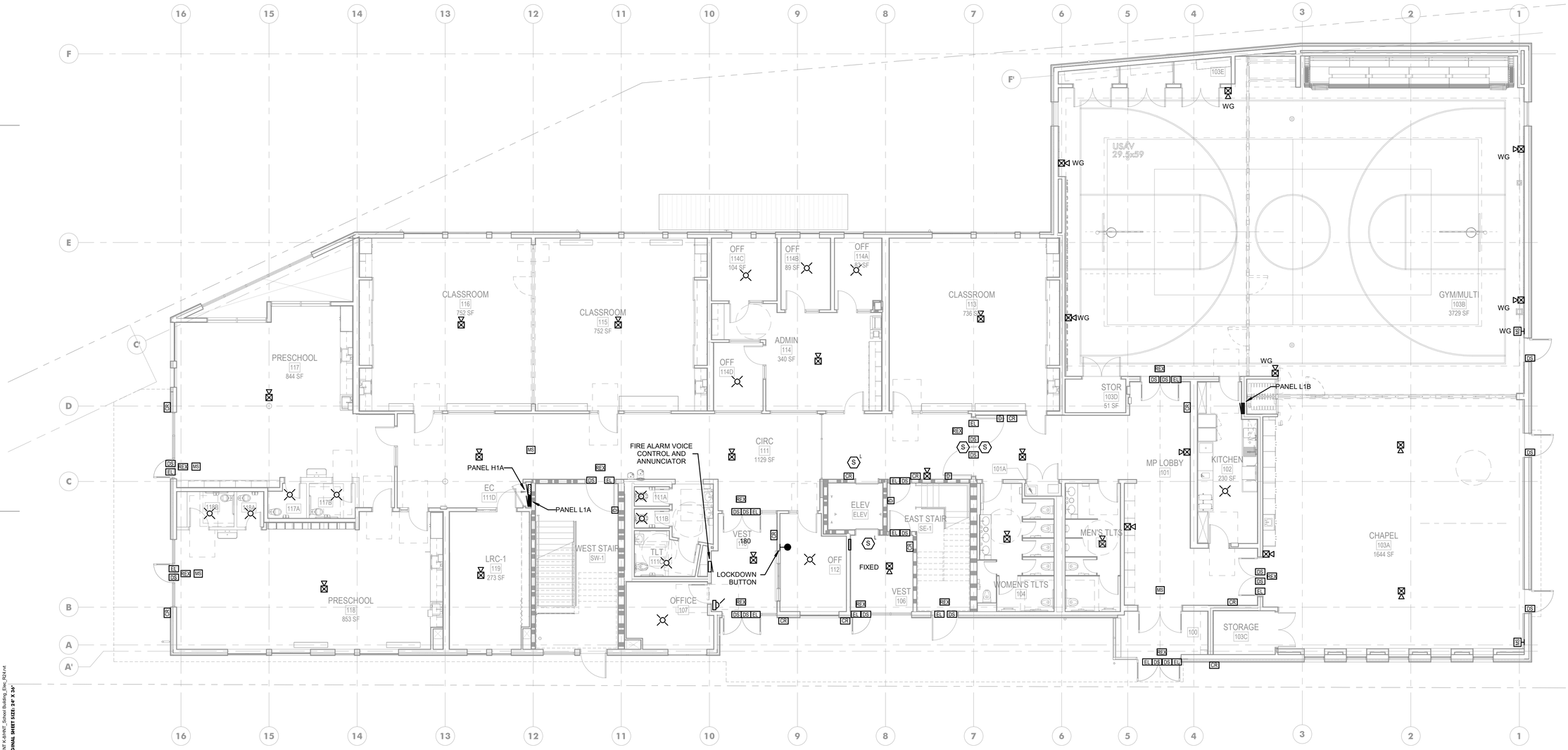

1 LEVEL 01 FLOOR PLAN - ESS

1/8" = 1'-0"

12/12/2025 3:38:04 PM Autodesk Docs://NT K-8/NT_School Building_Elec_R24.rvt
© ANJALI GRANT DESIGN LLC ORIGINAL SHEET SIZE: 24" X 36"

3700 E MERCER WAY
BARNABIE POINT PROJECT

NO	DATE	DESCRIPTION
	4 JUNE 2025	BUILDING PERMIT

PROJECT: 23-101

LEVEL 01 FLOOR PLAN - ESS

E-501

TFWB ENGINEERS INC
Travis Fitzmaurice Wartelle Balangue Engineers Inc.
1200 Westlake Ave. N., #509
Seattle, WA 98109
p: 206-285-7228 | info@tf-wb.com

3427 BEACON AVE S
SEATTLE 98144
ANJALI@AGRANTDESIGN.COM
206-512-4209
anjali grant design LLC

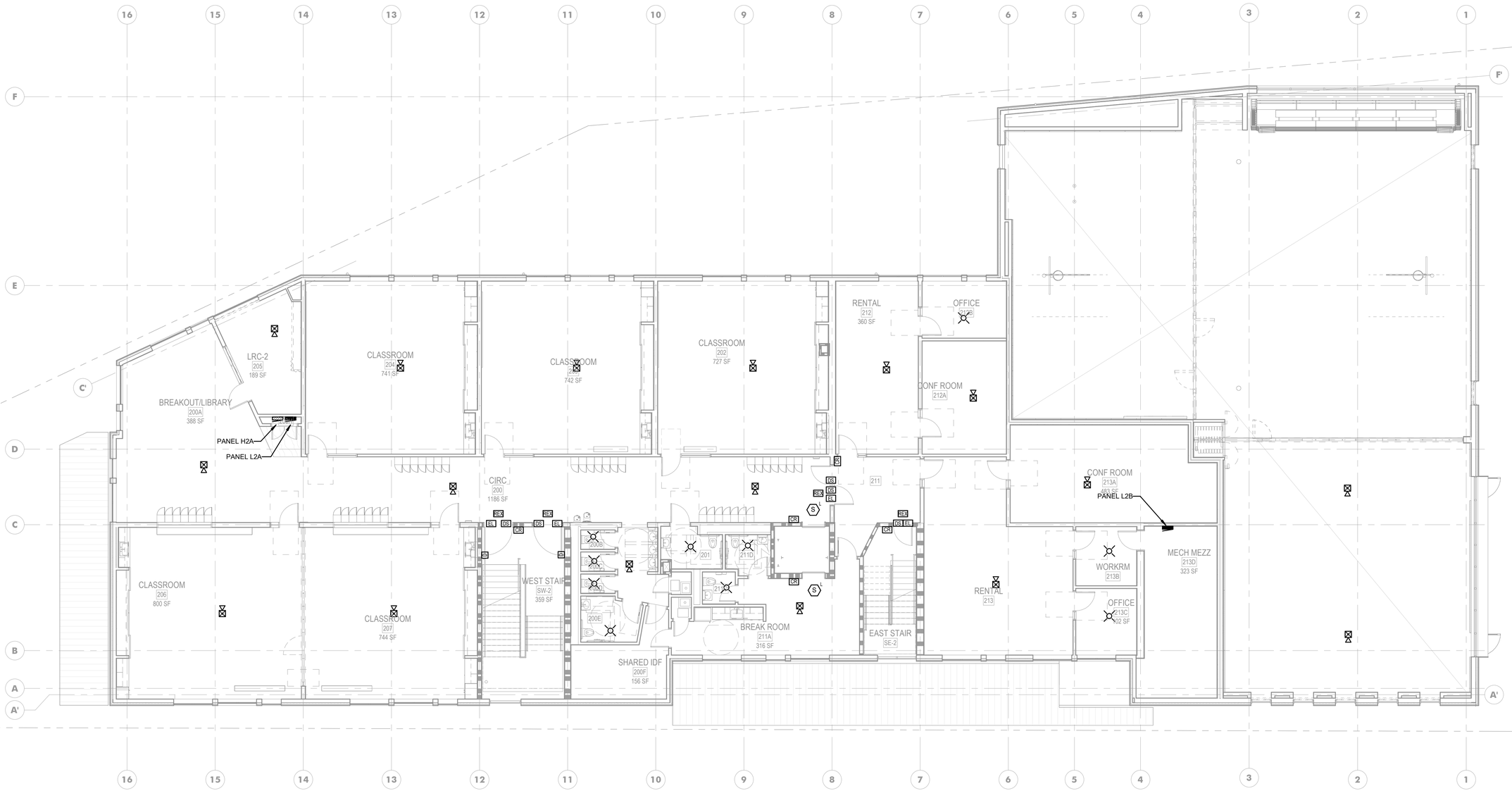

1 LEVEL 02 FLOOR PLAN - ESS

1/8" = 1'-0"

KEVIN E. WARTELLE
STATE OF WASHINGTON
21199
REGISTERED
PROFESSIONAL ENGINEER

3700 E MERCER WAY
BARNABIE POINT PROJECT

NO	DATE	DESCRIPTION
	4 JUNE 2025	BUILDING PERMIT

PROJECT: **23-101**

LEVEL 02 FLOOR PLAN - ESS

E-502

12/12/2025 3:38:55 PM Autodesk Docs://NHT K-8 NHT_School Building_Elec_R24.rvt
© ANJALI GRANT DESIGN LLC ORIGINAL SHEET SIZE: 24" X 36"

TFWB ENGINEERS INC.
Travis Fitzmaurice Wartelle
Balangue Engineers Inc.
1200 Westlake Ave. N., #509
Seattle, WA 98109
p: 206-285-7228 | info@tf-wb.com

3427 BEACON AVE S
SEATTLE 98144
ANJALI@AGRANTDESIGN.COM
206-512-4209
anjali grant design LLC

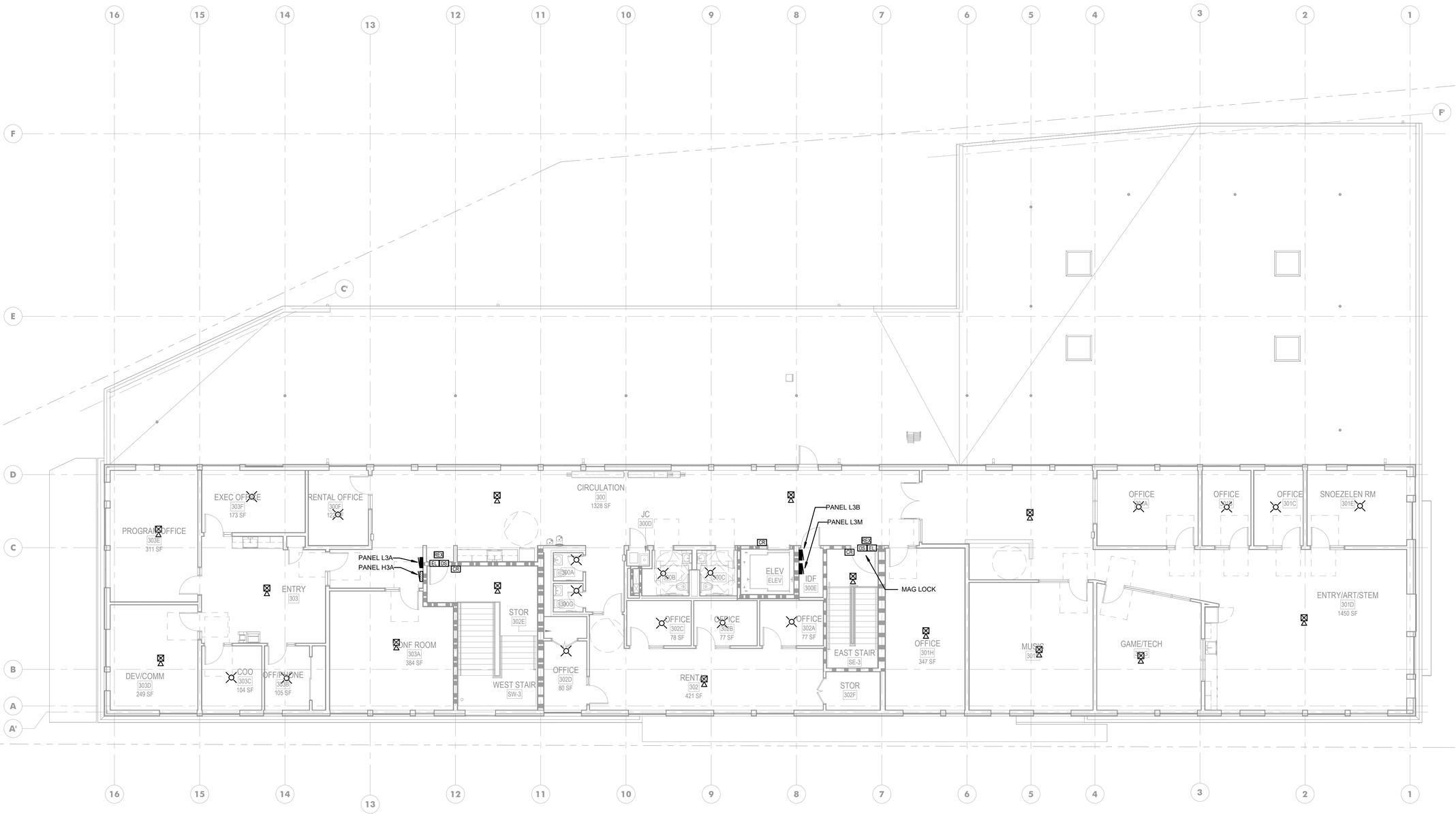

1 **LEVEL 03 FLOOR PLAN - ESS**
1/8" = 1'-0"

3700 E MERCER WAY
BARNABIE POINT PROJECT

NO	DATE	DESCRIPTION
	4 JUNE 2025	BUILDING PERMIT

PROJECT: 23-101

LEVEL 03 FLOOR PLAN - ESS

E-503

12/12/2025 3:38:56 PM Autodesk Docs://HNT K-8/HNT_School Building_Elec_R24.rvt
© ANJALI GRANT DESIGN LLC ORIGINAL SHEET SIZE: 24" X 36"

FEEDER SIZE CHART

	COPPER - THWN EMT/ PVC	WIRES	GND	ALUMINUM - XHHW-COMPACT EMT/ PVC	WIRES	GND
50	1	"-4# 8	-1# 8			
100	1.25	"-4# 2	-1# 6	2	"-4# 1/0	-1# 6
100G	1.25	"-4# 2	-2# 6	2	"-4# 1/0	-2# 4
150	1.5	"-4# 1/0	-1# 4	2	"-4# 3/0	-1# 2
200	2	"-4# 3/0	-1# 2	2.5	"-4# 250	-1# 1/0
225	2.5	"-4# 4/0	-1#	3	"-4# 300	-1# 1/0
250	2.5	"-4# 250	-1# 2	3	"-4# 350	-1# 3/0
300	3	"-4# 350	-1# 2	3	"-4# 500	-1# 3/0
350T	3	"-3# 500	-1# 1/0	3.5	"-3# 600	-1# 3/0
400 (2)	2	"-4# 3/0	-1# 2/0	(2) 2.5	"-4# 250	-1# 4/0
450T (2)	2.5	"-3# 4/0	-1# 2/0	(2) 3	"-3# 300	-1# 4/0
600 (2)	3	"-4# 350	-1# 3/0	(2) 3	"-4# 500	-1# 250
1000 (3)	3.5	"-4# 500	-1# 3/0	(3) 4	"-4# 600	-1# 250
1200 (3)	3.5	"-4# 600	-1# 3/0	(4) 3.5	"-4# 500	-1# 250

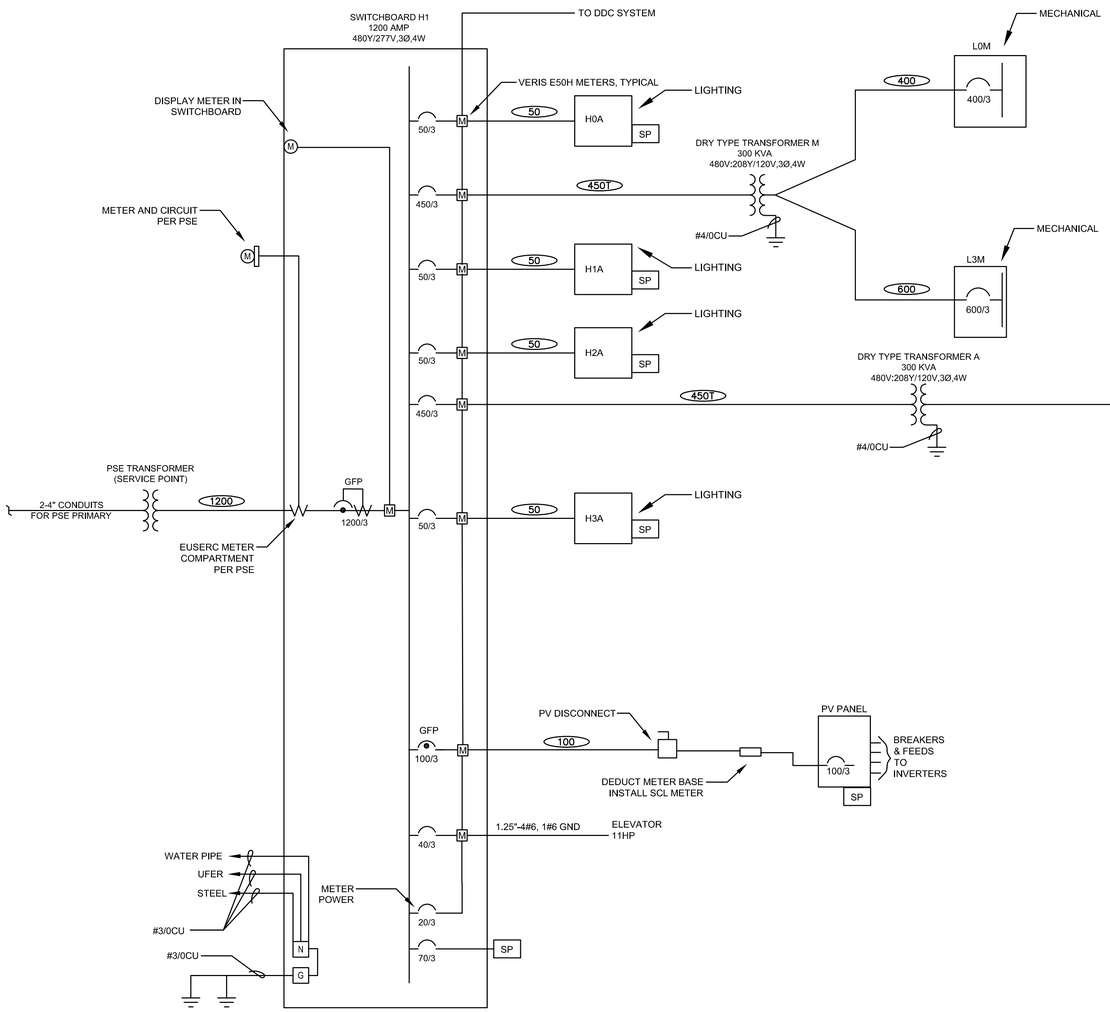

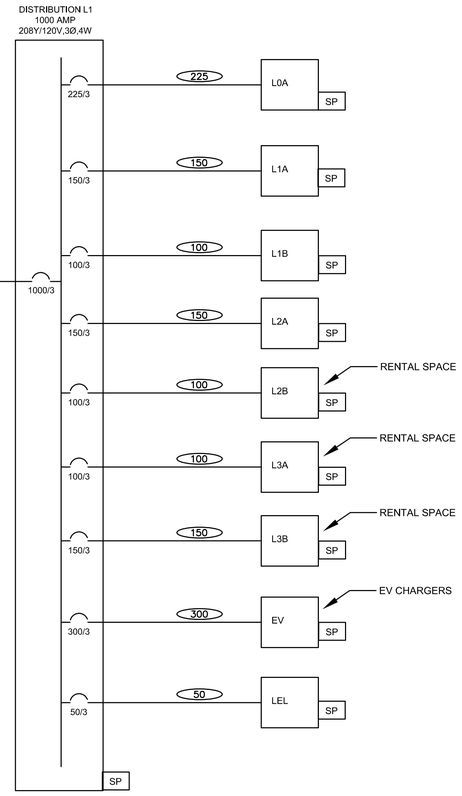

1 ONE LINE DIAGRAM
NTS

TFWB ENGINEERS PLLC
Travis Fitzmaurice Wartelle Balangue Engineers Inc.
1200 Westlake Ave. N., #509
Seattle, WA 98109
p: 206-285-7228 | info@tf-wb.com

3427 BEACON AVE S
SEATTLE 98144
ANJALI@AGRANITDESIGN.COM
206-512-4209

anjali granit design LLC

KEVIN E. WARTELLE — STATE OF WASHINGTON — 44109 — REGISTERED PROFESSIONAL ENGINEER

3700 E MERCER WAY
BARNABIE POINT PROJECT

NO.	DATE	DESCRIPTION
		4 JUNE 2025 BUILDING PERMIT

PROJECT: 23-101

ONE LINE DIAGRAM

E-600

O:\CAD\DWT Ext. 23-101E-600.dwg
2025/05/21 2:03 PM

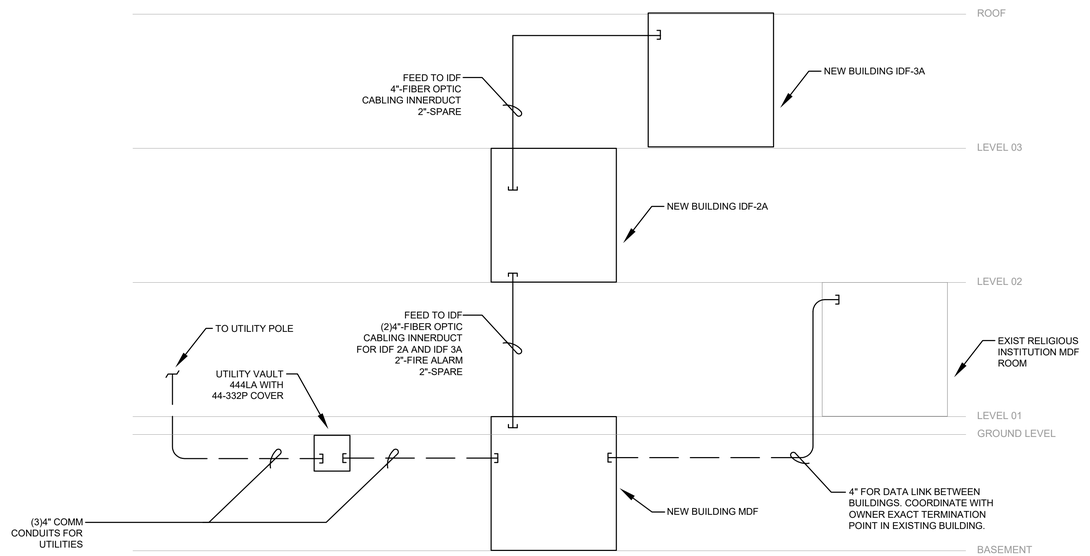

1 **COMM RISER DIAGRAM**
NTS

TFWB ENGINEERS INC.
Travis Fitzmaurice Wartelle
Balangue Engineers Inc.
1200 Westlake Ave. N., #509
Seattle, WA 98109
p: 206-285-7228 | info@tf-wb.com

3427 BEACON AVE S
SEATTLE 98144
ANJALI@AGRANTDESIGN.COM
206-512-4209

anjali grant design LLC

KEVIN E. WARTELLE
STATE OF WASHINGTON
44199
REGISTERED
PROFESSIONAL ENGINEER

3700 E MERCER WAY
BARNABIE POINT PROJECT

NO.	DATE	DESCRIPTION

4 JUNE 2025
BUILDING PERMIT

PROJECT: 23-101

COMM RISER DIAGRAM

E-601

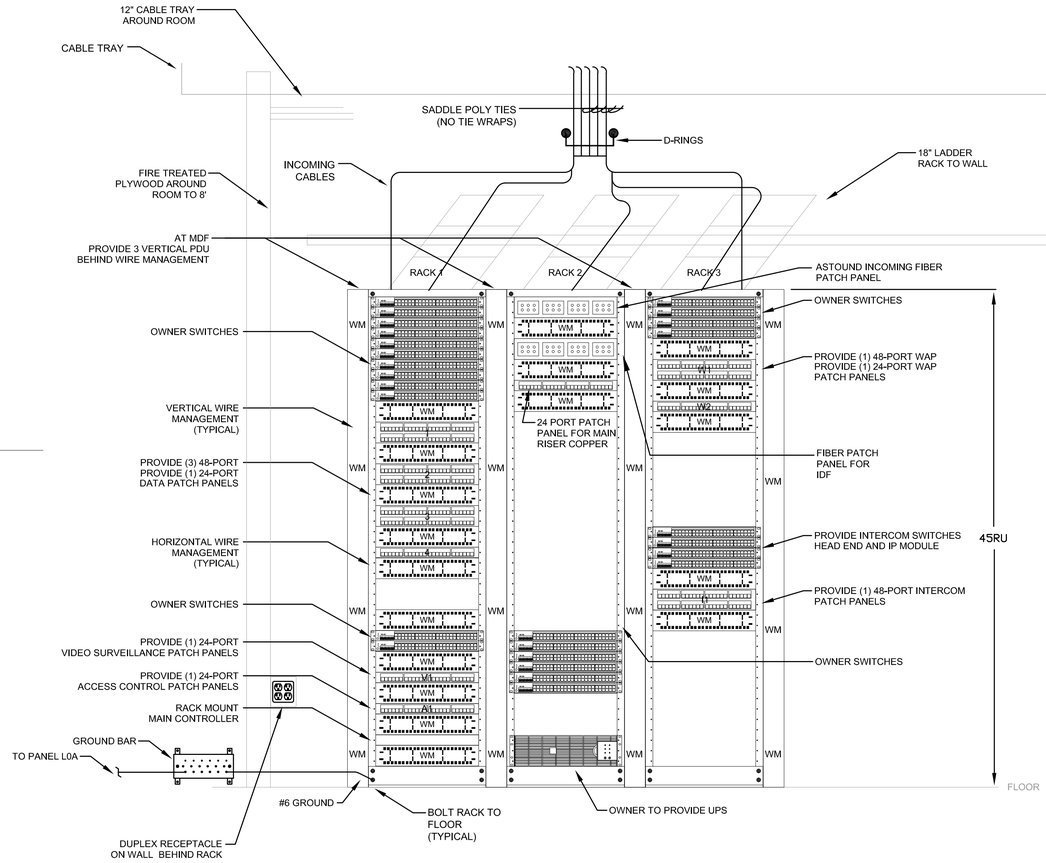

1 MDF RACK DETAILS
NTS

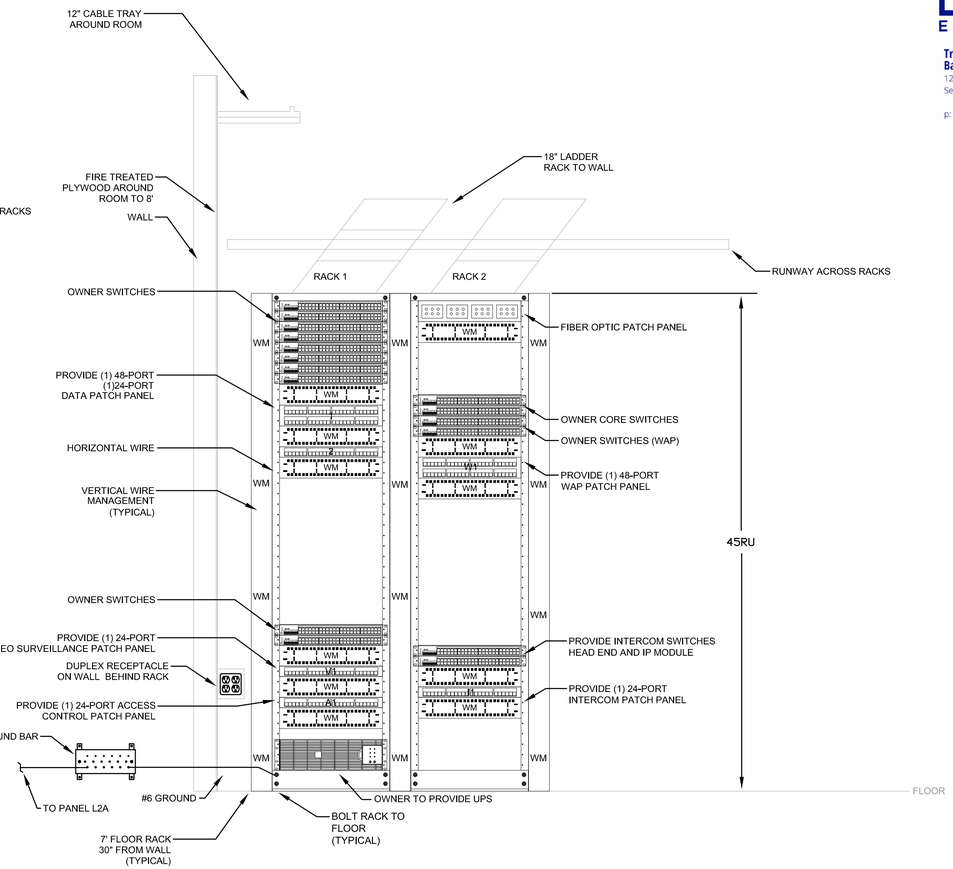

2 IDF-2A RACK DETAILS
NTS

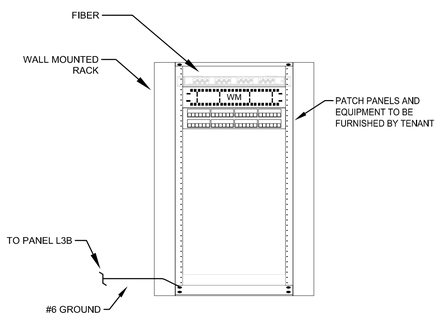

3 IDF-3A RACK DETAILS
NTS

AV DETAIL NOTES:

1. AV DETAILS 4-6 ARE FOR REFERENCE ONLY. CONTRACTOR TO PROVIDE REQUIRED J-BOXES AND PATHWAYS FOR AV EQUIPMENT. AV DESIGN SHALL BE COORDINATED WITH AV CONSULTANT FOR EXACT EQUIPMENT REQUIREMENTS.

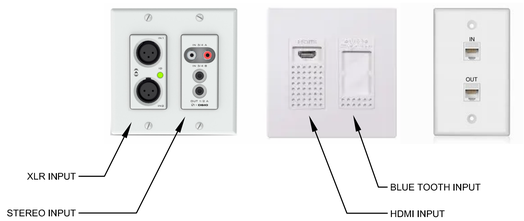

4 AVIO A - AV DETAIL
NTS

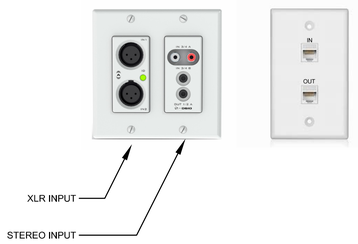

5 AVIO B - AV DETAIL
NTS



5 AVIO C - AV DETAIL
NTS

TFWB ENGINEERS
Travis Fitzmaurice Wartelle Balangue Engineers Inc.
1200 Westlake Ave. N., #509
Seattle, WA 98109
p: 206-285-7228 | info@tf-wb.com

3427 BEACON AVE S
SEATTLE 98144
ANJALI@AGRANTDESIGN.COM
206-512-4209

KEVIN E. WARTELLE — STATE OF WASHINGTON — 44109 — REGISTERED PROFESSIONAL ENGINEER

3700 E MERCER WAY
BARNABIE POINT PROJECT

NO.	DATE	DESCRIPTION
	4 JUNE 2025	BUILDING PERMIT

PROJECT: 23-101

RACK DETAILS

E-602

O:\CAD\Shtf, Ext. 23-101E-600.dwg
2025/06/04 2:49 PM

TFWB ENGINEERS INC
Travis Fitzmaurice Wartelle
Balangue Engineers Inc.
1200 Westlake Ave. N., #509
Seattle, WA 98109
p: 206-285-7228 | info@tf-wb.com

3427 BEACON AVE S
SEATTLE 98144
ANJALI@AGRANTIDESIGN.COM
206-512-4209

anjali grant design LLC

LIGHTING FIXTURE SCHEDULE - BARNABIE POINT K-8

TYPE	LAMP	LUMEN OUTPUT	CCT	VOLTAGE	EMBEDDED WIRELESS CONTROLS	CONTROL	MANUFACTURER	DESCRIPTION	LOCATION
EP, EM	LED 48 W	5,000 LUMENS	3000K	120 V	NO	SWITCH	COLUMBIA: LXEM-ML40-RA LDPI: LE202-77 ILP: WTZ-54WLED CERTOLUX: CRV-48-840K LITHONIA DMW2 HE WILLIAMS 96 SERIES	ELEVATOR MACHINE ROOM FIXTURE. NEMA 4 LISTING REQUIRED. PROVIDE EMERGENCY BATTERY BALLAST BODINE B50ST. PROVIDE INTEGRAL OCCUPANCY/DAYLIGHT SENSOR WITH NETWORKED WIRELESS CONTROLS.	ELEVATOR MACHINE ROOM AND PIT
P	LED 32.3W	6,000 LUMENS	2700K	277 V	YES - MOTION AND DAYLIGHT	TIME CLOCK	GARDCO: PUREFORM P15 P15-A03-827-AMBER3-T3M-NONE-AR1-277-010V-PCB	ARM-MOUNTED LED POLE FIXTURE WITH MOTION RESPONSE OCCUPANCY SENSOR, INTEGRAL WIRELESS MODULE, TYPE 3 OPTIC, AND FULL CUTOFF PERFORMANCE. PROVIDE HIGHLY DIFFUSE, UNIFORMLY ILLUMINATED LENS. UL WET LABEL AND LOW TEMP DRIVER. MOUNT ON 14' FOOT TALL , 4" ROUND, 0.188" ALUMINUM POLE WITH HANDHOLE TO UTILITY VAULT 24R-8-LB POLE BASE. PROVIDE BASE COVER. IN PARKING AND ROAD EXPOSE 2' OF BASE. IN LANDSCAPE AREAS FLUSH WITH GRADE. MOTION SENSOR TO REDUCE TO 30% WHEN NO MOTION. FIXTURE OPTICS ARE ONLY DIRECTED DOWNWARD. BUG RATING B1-U0-G1. DARK SKY APPROVED FIXTURE.	PARKING
PL-1	LED 40 W	4,500 LUMENS	3000K	277 V	YES - MOTION AND DAYLIGHT	0-10V DIM	COLUMBIA MPS-4-35-MLHE-C-W-ED-U-NXSW-CM-24SCF3-KIT LITHONIA METALUX DAYBRITE	PENDANT MOUNTED LENSED LED STRIPLIGHT. PROVIDE ADJUSTABLE CABLE MOUNTING. PROVIDE INTEGRAL OCCUPANCY/DAYLIGHT SENSOR WITH NETWORKED WIRELESS CONTROLS.	BACK OF HOUSE
PL-1E								SAME AS PL-1 BUT WITH INTEGRAL EMERGENCY BATTERY PACK	
PL-2	LED 6.3 + 7.7 = 14 W/FT	912 + 1230 LUMENS = 2,142 LUMENS/FT	3000K	277 V	YES - MOTION AND DAYLIGHT	0-10V DIM	ALW: LIGHTPLANE+ 2 LPX-2-B-SP-F-O-SXX-07-30-90-WS-V01-12-30-90-BW-V01-XX-W16-1C-UNV-N-OS/PH/INT/XX-N	2" APERTURE DIRECT/INDIRECT LINEAR LED PENDANT WITH BATWING INDIRECT AND WIDESPREAD DIRECT DISTRIBUTION. SEE PLANS FOR CONTINUOUS LENGTHS.	CLASSROOMS
PL-2E								SAME AS PL-2 BUT WITH INTEGRAL EMERGENCY BATTERY PACK	
PL-3	LED 9 + 7.7 = 16.7 W/FT	1203 + 1230 LUMENS = 2433 LUMENS/FT	3000K	277 V	YES - MOTION AND DAYLIGHT	0-10V DIM	ALW: LIGHTPLANE+ 2 LPX-2-B-SP-F-O-SXX-10-30-90-WS-V01-12-30-90-BW-V01-XX-W16-1C-UNV-N-OS/PH/INT/XX-N	SAME AS PL-2 BUT HIGHER OUTPUT	LAB/STEM/ART ROOMS
PL-3E								SAME AS PL-3 BUT WITH INTEGRAL EMERGENCY BATTERY PACK	
PL-4	LED 78W	7,644 LUMENS	3000K	277 V	YES-MOTION AND PHOTO	0-10V DIM	SPI LIGHTING: PAVO 8" L78W-277-3000K-90-DF_DIM1-NO DL-DF_MA01-DF_PSA	8" DIAMETER X 6 FT HIGH ILLUMINATED LED CYLINDER FIXTURE.	MULTIPURPOSE
PL-4E								SAME AS PL-4 BUT WITH INTEGRAL EMERGENCY BATTERY PACK	
PL-5	LED 10W	899 LUMENS	3000K	277V	YES-MOTION AND PHOTO	0-10V DIM	SPI LIGHTING: VALLEJO LC 4" SIP12123-L10W-120-277V-3000K-DF_80-XX-	4" DIAMETER X 6" MEDIUM DISTIBUTION CYLINDER FIXTURE.	
PL-5E								SAME AS PL-5 BUT WITH INTEGRAL EMERGENCY BATTERY PACK	

LIGHTING FIXTURE SCHEDULE - BARNABIE POINT K-8

TYPE	LAMP	LUMEN OUTPUT	CCT	VOLTAGE	EMBEDDED WIRELESS CONTROLS	CONTROL	MANUFACTURER	DESCRIPTION	LOCATION
RL-1	LED 6.5 W	735 LUMENS/FT	3000K	277 V	YES-MOTION AND PHOTO	0-10V DIM	ALW: SUPERPLANE 2.5R SP2.5R-XX-SXX-MED-90-3000K-V01-CR/BAT-XX-UNV-XX	RECESSED 2.5" APERTURE LINEAR LED SLOT FIXTURE WITH INTEGRAL DRIVER AND LOW GLARE OPTICS. SEE PLANS FOR CONTINUOUS RUN LENGHTS.	HALLWAY
RL-1E								SAME AS RL-1 BUT WITH INTEGRAL EMERGENCY BATTERY PACK	
RL-1F								SAME AS RL-1 BUT WITH FLANGE KIT FOR MOUNTING IN GWB CEILING	
RL-1FE								SAME AS RL-1F BUT WITH INTEGRAL EMERGENCY BATTERY PACK	
RL-2	LED 45W	4,000 LUMENS	3000K	277 V	YES-MOTION AND PHOTO	0-10V DIM	FOCAL POINT: EQUATION FEQ-14-AC-4000LH-30K-1C-277-LD1	1X4 RECESSED ARCHITECTURAL TROFFER	OFFICE
RL-3	LED 40W	3,500 LUMENS	3000K	277V	YES-MOTION AND PHOTO	0-10V DIM	FOCAL POINT: EQUATION FEQ-14-AC-3500LH-30K-1C-277-LD1	1X4 RECESSED ARCHITECTURAL TROFFER	OFFICE
RL-4	LED 22 W	2,000 LUMENS	3000K	277 V	NO	0-10V DIM	GOTHAM:EVO4 EV04-30/07-AR-MD-LD-277 PRESCOLITE: LF4 LF4SL4LFSL-20L-35K EATON: PORTFOLIO LD4B LD4B-20-D010-EU4B-1020-80-35-4LB-W-0-H PHILIPS LIGHTOLIER: CALCULITE C4RDL C4R-N-C4L-C4L-20-8-35-W-Z10-U-C4-R-DL-CD	RECESSED 4" LED DOWNLIGHT WITH SEMI DIFFUSE REFLECTOR AND WIDE DISTRIBUTION.	HALLWAY
SL-1								SAME AS PL-1 BUT SURFACE MOUNT	BACK OF HOUSE
SL1N								SAME AS SL-1 BUT NO WIRELESS. CONNECTED TO OCCUPANCY SENSOR SWITCH	
SL-2	LED 150 + 33 = 183 W	17,129 + 5096 = 22,225 LUMENS	3000K	277 V	YES - MOTION AND DAYLIGHT	0-10V DIM	COOPER TOP TIER OR LITHONIA VCPG (SURFACE MOUNT)	30" ROUND SURFACE MOUNT LED FIXTURE, IK-10 RATED. (LOCATE BETWEEN BEAMS)	GYM
SL-2E								SAME AS PL-4 BUT WITH INTEGRAL EMERGENCY BATTERY PACK	
SL-3E	LED 36W		4000K		YES - MOTION AND DAYLIGHT	SWITCH	TRULYGREEN SL4-4-30-C-SK	SURFACE 4" LIGHT PANEL CONNECTED TO OCC SENSOR. PROVIDE EMERGENCY BATTERY PACK.	
SL-4	LED 30W	3046 LUMENS	3000K	277	YES - MOTION AND DAYLIGHT	0-10V DIM	LUMINIS HC1610-L4L30-30K-277-DMX-FS-MS	19" ROUND SURFACE MOUNTED DECORATIVE LED FIXTURE.	HALLWAYS
UC	LED 6W/FT	180 LUMENS/FT	3000K	277V	YES - MOTION	SWITCH	QTRAN: VERS-FLUSH (02) VERS-02-SW-5-35-DRY-DF-P2-CON6-WH-CL2-CC-ST-XX LUMINII: KENDO KELVIX	LOW VOLTAGE UNDERCABINET LED LIGHT WITH COEXTRUDED ACRYLIC DIFFUSE LENS. PROVIDE WALL SWITCH AND INTEGRATED OCCUPANCY SENSOR. SEE FLOOR PLANS FOR LENGTHS. PROVIDE POWER SUPPLY AND ALL OTHER ACCESSORIES REQUIRED FOR A FULLY FUNCTIONAL SYSTEM.	UNDERCABINET

KEVIN E. WARTELLE
STATE OF WASHINGTON
44109
REGISTERED PROFESSIONAL ENGINEER

3700 E MERCER WAY
BARNABIE POINT PROJECT

NO.	DATE	DESCRIPTION

4 JUNE 2025
BUILDING PERMIT

PROJECT: 23-101

LIGHT FIXTURE SCHEDULE

E-700

D:\DASHNY Kvb 23-101\E-700.dwg
2025-06-04 12:39 PM

TFWB ENGINEERS INC.
Travis Fitzmaurice Wartelle Balangue Engineers Inc.
1200 Westlake Ave. N., #509
Seattle, WA 98109
p: 206-285-7228 | info@tf-wb.com

3427 BEACON AVE S
SEATTLE 98144
ANJALI@AGRANTDESIGN.COM
206-512-4209

anjali grant design LLC

LIGHTING FIXTURE SCHEDULE - BARNABIE POINT K-8

TYPE	LAMP	LUMEN OUTPUT	CCT	VOLTAGE	EMBEDDED WIRELESS CONTROLS	CONTROL	MANUFACTURER	DESCRIPTION	LOCATION
WL-1	LED 17 W	2,511 LUMENS	2700K	277V	NO	TIME CLOCK	LUMINIS: LED WALL SCONCE SYP600-L1LK2A-FLD-27K-277-	CYLINDRICAL LED WALL SCONCE WITH FULL CUTOFF PERFORMANCE AND TYPE 3 LIGHTING DISTRIBUTION. PROVIDE DIFFUSE OPTICS. UL LISTED FOR WET LOCATION. FIXTURE OPTICS ARE ONLY DIRECTED DOWNWARD. BUG RATING B1-U0-G1.	EXTERIOR WALL
WL-2	LED 17 W + 30 W	2,511 LUMENS DOWN + 2,200 LUMENS UP	2700K	277V	NO	TIME CLOCK	LUMINIS: LED WALL SCONCE SYP602-L1LK2A-FLD-UL1K2A-UFLD-27K-277-	CYLINDRICAL LED WALL SCONCE WITH DIRECT/INDIRECT DISTRIBUTION. DOWNLIGHT SHALL HAVE TYPE 3 DISTRIBUTION AND UPLIGHT SHALL HAVE WALL WASH DISTRIBUTION. PROVIDE DIFFUSE OPTICS. UL LISTED FOR WET LOCATION. BUG RATING B1-U0-G1.	EXTERIOR WALL
WL-3	LED 7 W	221 LUMENS	2700K	277V	NO	TIME CLOCK	LUMINIS: LED WALL SCONCE SN825-L1LK2A-27K-277-AMB-PH-XX	CYLINDRICAL LED WALL SCONCE WITH FULL CUTOFF PERFORMANCE AND TYPE 3 LIGHTING DISTRIBUTION. PROVIDE DIFFUSE OPTICS. UL LISTED FOR WET LOCATION. FIXTURE OPTICS ARE ONLY DIRECTED DOWNWARD. BUG RATING B1-U0-G1.	EXTERIOR WALL
X	LED 2.1 W			277 V			DUAL LITE: SE-G-I MCPHILBEN: ER55L CHLORIDE: CE-11300-55L3G SURE-LITES: CAX-7 BEGHELLI: FME	CEILING DIE CAST LED EXIT SIGN WITH BATTERIES WITH SELF DIAGNOSTICS, BATTERY BACKUP AND ALL MOUNTING ACCESSORIES. PROVIDE ARROWS AND FACES AS SHOWN ON DRAWINGS. PROVIDE WHITE BODY WITH GREEN LETTERS AND UNIFORM LENS OVER LED.	SEE PLANS
XE	LED			277 V			BEGHELLI: FRM-C	CEILING/WALL DIE CAST LED EXIT SIGN WITH EMERGENCY HEAD UNITS. PROVIDE BATTERIES, SELF DIAGNOSTICS AND ALL MOUNTING ACCESSORIES. PROVIDE ARROWS AND FACES AS SHOWN ON DRAWINGS. PROVIDE WHITE BODY WITH GREEN LETTERS AND UNIFORM LENS OVER LED.	
X-1				277 V			BEGHELLI: XMR DUAL-LITE: LZ15-I CHLORIDE: CA EVENLITE: TEBL2W-SD	LOW PROFILE BATTERY HEAD UNIT WITH SELF DIAGNOSTICS.	SEE PLANS
XW							SAME AS X EXCEPT WALL MOUNT		SEE PLANS

KEVIN E. WARTELLE
STATE OF WASHINGTON
44199
REGISTERED
PROFESSIONAL ENGINEER

3700 E MERCER WAY
BARNABIE POINT PROJECT

NO.	DATE	DESCRIPTION
	4 JUNE 2025	BUILDING PERMIT

PROJECT: 23-101

LIGHT FIXTURE SCHEDULE

E-701

O:\CADENT K-8 23-101\E-700.dwg
2/2/2021 2:03 PM

LIGHTING CONTROL SCHEDULE

CONTROLLER	ROOM	PANEL	CIRCUIT	INTERFACE	DEVICES	DESCRIPTION
STAIR S101	**WEST STAIR SW-0**	H0A	2 a	WIRELESS CONTROLLER	OCCUPANCY SENSOR AUTO ON	GENERAL LIGHTING
001	**CIRC**	H0A	5 a	WIRELESS CONTROLLER	WIRELESS SWITCH, OCC SENSOR AUTO ON	GENERAL LIGHTING
KEYED SWITCH	*ZONE:*	*FUNCTION:*		*SWITCH LABEL:*		
	1) a	ON/OFF		NONE		
002	**STEM/SCIENCE**	H0A	1 a	WIRELESS CONTROLLER	DIG SWITCH, OCC SENSOR AUTO ON 50%, PHOTOCELL	FRONT 1 DAYLIGHT ZONE 1
			b	WIRELESS CONTROLLER	DIG SWITCH, OCC SENSOR AUTO ON 50%, PHOTOCELL	FRONT 1 DAYLIGHT ZONE 2
			c	WIRELESS CONTROLLER	WIRELESS SWITCH, OCC SENSOR AUTO ON 50%	FRONT 1 GENERAL
			d	WIRELESS CONTROLLER	WIRELESS SWITCH, OCC SENSOR AUTO ON 50%	FRONT 2 GENERAL
			e	WIRELESS CONTROLLER	DIG SWITCH, OCC SENSOR AUTO ON 50%, PHOTOCELL	BACK DAYLIGHT ZONE 1
			f	WIRELESS CONTROLLER	DIG SWITCH, OCC SENSOR AUTO ON 50%, PHOTOCELL	BACK DAYLIGHT ZONE 2
			g	WIRELESS CONTROLLER	WIRELESS SWITCH, OCC SENSOR AUTO ON 50%	BACK GENERAL
5-BUTTON SWITCH:	*ZONE:*	*FUNCTION:*		*SWITCH LABEL:*		
	1) a,b,c	ON/OFF		FRONT 1 ON/OFF		
	2) d	ON/OFF		FRONT 2 ON/OFF		
	3) e,f,g	ON/OFF		BACK ON/OFF		
	4) a,b,c,d,e,f,g	DIM UP		↑		
	5) a,b,c,d,e,f,g	DIM DOWN		↓		
002A	**STORAGE**	H0A	5 a	WIRELESS CONTROLLER	WIRELESS SWITCH, OCC SENSOR AUTO ON	GENERAL LIGHTING
1-BUTTON SWITCH	*ZONE:*	*FUNCTION:*		*SWITCH LABEL:*		
	1) a	ON/OFF		NONE		
002B	**ELECTRICAL ROOM**	H0A	5 a	WIRELESS CONTROLLER	WIRELESS SWITCH, OCC SENSOR AUTO ON	GENERAL LIGHTING
1-BUTTON SWITCH	*ZONE:*	*FUNCTION:*		*SWITCH LABEL:*		
	1) a	ON/OFF		NONE		
003	**ART**	H0A	1 a	WIRELESS CONTROLLER	DIG SWITCH, OCC SENSOR AUTO ON 50%, PHOTOCELL	FRONT DAYLIGHT ZONE 1
			b	WIRELESS CONTROLLER	DIG SWITCH, OCC SENSOR AUTO ON 50%, PHOTOCELL	FRONT DAYLIGHT ZONE 2
			c	WIRELESS CONTROLLER	DIG SWITCH, OCC SENSOR AUTO ON 50%	FRONT GENERAL
			d	WIRELESS CONTROLLER	DIG SWITCH, OCC SENSOR AUTO ON 50%, PHOTOCELL	BACK DAYLIGHT ZONE 1
			e	WIRELESS CONTROLLER	DIG SWITCH, OCC SENSOR AUTO ON 50%, PHOTOCELL	BACK DAYLIGHT ZONE 1
			f	WIRELESS CONTROLLER	DIG SWITCH, OCC SENSOR AUTO ON 50%	BACK GENERAL
4-BUTTON SWITCH:	*ZONE:*	*FUNCTION:*		*SWITCH LABEL:*		
	1) a,b,c	ON/OFF		FRONT ON/OFF		
	2) d,e,f	ON/OFF		BACK ON/OFF		
	3) a,b,c,d,e,f	DIM UP		↑		
	4) a,b,c,d,e,f	DIM DOWN		↓		
003A	**ART STORAGE**	H0A	1 a	WIRELESS CONTROLLER	WIRELESS SWITCH, OCC SENSOR AUTO ON	GENERAL LIGHTING
1-BUTTON SWITCH	*ZONE:*	*FUNCTION:*		*SWITCH LABEL:*		
	1) a	ON/OFF		NONE		
004	**FACULTY**	H3A	5 a	WIRELESS CONTROLLER	DIG SWITCH, OCC SENSOR AUTO ON 50%, PHOTOCELL	FRONT DAYLIGHT ZONE 1
			b	WIRELESS CONTROLLER	DIG SWITCH, OCC SENSOR AUTO ON 50%, PHOTOCELL	BACK DAYLIGHT ZONE 1
4-BUTTON SWITCH:	*ZONE:*	*FUNCTION:*		*SWITCH LABEL:*		
	1) a	ON/OFF		FRONT ON/OFF		
	2) b	ON/OFF		BACK ON/OFF		
	3) a,b	DIM UP		↑		
	4) a,b	DIM DOWN		↓		
	PLUG LOAD CONTROLS					
		L0A	6 C		TIMER & OVERRIDE VIA LIGHTING CONTROL SYSTEM	
005	**WORKROOM**	H0A	3 a	WIRELESS CONTROLLER	WIRELESS SWITCH, OCC SENSOR AUTO ON	GENERAL LIGHTING
1-BUTTON SWITCH	*ZONE:*	*FUNCTION:*		*SWITCH LABEL:*		
	1) a	ON/OFF		NONE		
	PLUG LOAD CONTROLS					
		L0A	18 C		TIMER & OVERRIDE VIA LIGHTING CONTROL SYSTEM	
			28 C			
006	**CONFERENCE**	H0A	3 a	WIRELESS CONTROLLER	WIRELESS SWITCH, OCC SENSOR AUTO ON 50%	FRONT LIGHTING
			b	WIRELESS CONTROLLER	WIRELESS SWITCH, OCC SENSOR AUTO ON 50%	BACK LIGHTING
4-BUTTON SWITCH:	*ZONE:*	*FUNCTION:*		*SWITCH LABEL:*		
	1) a	ON/OFF		FRONT ON/OFF		
	2) b	ON/OFF		BACK ON/OFF		
	3) a,b	DIM UP		↑		
	4) a,b	DIM DOWN		↓		
	PLUG LOAD CONTROLS					
		L0A	10 C		TIMER & OVERRIDE VIA LIGHTING CONTROL SYSTEM	
006A	**STORAGE**	H0A	3 a	WIRELESS CONTROLLER	WIRELESS SWITCH, OCC SENSOR AUTO ON	GENERAL LIGHTING
1-BUTTON SWITCH	*ZONE:*	*FUNCTION:*		*SWITCH LABEL:*		
	1) a	ON/OFF		NONE		
007	**PLUMBING/STORAGE**	H0A	3 a	WIRELESS CONTROLLER	WIRELESS SWITCH, OCC SENSOR AUTO ON	GENERAL LIGHTING
1-BUTTON SWITCH	*ZONE:*	*FUNCTION:*		*SWITCH LABEL:*		
	1) a	ON/OFF		NONE		
008	**MP STORAGE**	H0A	5 a	WIRELESS CONTROLLER	WIRELESS SWITCH, OCC SENSOR AUTO ON	GENERAL LIGHTING
1-BUTTON SWITCH	*ZONE:*	*FUNCTION:*		*SWITCH LABEL:*		
	1) a	ON/OFF		NONE		

TFWB ENGINEERS INC
Travis Fitzmaurice Wartelle Balangue Engineers Inc.
1200 Westlake Ave. N., #509
Seattle, WA 98109
p: 206-285-7228 | info@tf-wb.com

3427 BEACON AVE S
SEATTLE 98144
ANJALI@AGRANITDESIGN.COM
206-512-4209

anjali grant design LLC



3700 E MERCER WAY
BARNABIE POINT PROJECT

NO.	DATE	DESCRIPTION

4 JUNE 2025
BUILDING PERMIT

PROJECT: 23-101

LIGHTING CONTROL SCHEDULE

E-702

O:\CAD\ARKIT R24 23-101\E-700.dwg
2025/06/04 2:29 PM

TFWB ENGINEERS
Travis Fitzmaurice Wartelle Balangue Engineers Inc.
1200 Westlake Ave. N., #509
Seattle, WA 98109
p: 206-285-7228 | info@tf-wb.com

3427 BEACON AVE S
SEATTLE 98144
ANJALI@AGRANTDESIGN.COM
206-512-4209

anjali grant design LLC

LIGHTING CONTROL SCHEDULE

CONTROLLER	ROOM	PANEL	CIRCUIT	INTERFACE	DEVICES	DESCRIPTION
008A	**MDF**	H0A	5 a	WIRELESS CONTROLLER	WIRELESS SWITCH, OCC SENSOR AUTO ON	GENERAL LIGHTING
1-BUTTON SWITCH	*ZONE:*	*FUNCTION:*		*SWITCH LABEL:*		
	1) a	ON/OFF		NONE		
008B	**SPRINKLER**	H0A	5 a	WIRELESS CONTROLLER	WIRELESS SWITCH, OCC SENSOR AUTO ON	GENERAL LIGHTING
1-BUTTON SWITCH	*ZONE:*	*FUNCTION:*		*SWITCH LABEL:*		
	1) a	ON/OFF		NONE		
009	**TOILET**	H0A	3	WIRELESS CONTROLLER	WIRELESS SWITCH, OCC SENSOR AUTO ON	GENERAL LIGHTING
1-BUTTON SWITCH	*ZONE:*	*FUNCTION:*		*SWITCH LABEL:*		
	1) a	ON/OFF		NONE		
LIGHTS LISTED IN THIS SECTION SHALL BE PROGRAMED SO THAT LIGHTS ARE ALWAYS ON AT LOW WATTAGE SETTING. THE EXACT PERCENTAGE OF BRIGHTNESS SHALL BE COORDINATED WITH OWNER. ENERGY CODE EXEMPTION IS ALLOWED AS THIS SPACE IS USED FOR RELIGIOUS PURPOSES. SEE FLOOR PLANS FOR CALL OUT AREA						
100	**VESTIBULE**	H1A	6 a	WIRELESS CONTROLLER	WIRELESS SWITCH, OCC SENSOR AUTO ON, PHOTOCELL	DAYLIGHT ZONE 1
KEYED SWITCH	*ZONE:*	*FUNCTION:*		*SWITCH LABEL:*		
	1) a	ON		NONE		
101	**MP LOBBY**	H1A	6 a	WIRELESS CONTROLLER	WIRELESS SWITCH, OCC SENSOR AUTO ON	GENERAL LIGHTING
(2)KEYED SWITCH	*ZONE:*	*FUNCTION:*		*SWITCH LABEL:*		
	1) a	ON		NONE		
102	**KITCHEN**	H1A	6 a	WIRELESS CONTROLLER	WIRELESS SWITCH, OCC SENSOR AUTO ON	GENERAL LIGHTING
(2)1-BUTTON SWITCH	*ZONE:*	*FUNCTION:*		*SWITCH LABEL:*		
	1) a	ON		NONE		
103A	**CHAPEL**	H1A	2 a	WIRELESS CONTROLLER	WIRELESS SWITCH, OCC SENSOR AUTO ON 50%, PHOTOCELL	FRONT DAYLIGHT ZONE 1
			b	WIRELESS CONTROLLER	WIRELESS SWITCH, OCC SENSOR AUTO ON 50%, PHOTOCELL	BACK DAYLIGHT ZONE 1
			c	WIRELESS CONTROLLER	WIRELESS SWITCH, OCC SENSOR AUTO ON 50%, PHOTOCELL	BACK DAYLIGHT ZONE 2
			d	WIRELESS CONTROLLER	WIRELESS SWITCH, OCC SENSOR AUTO ON 50%	BACK GNERAL LIGHTING
4-BUTTON SWITCH:	*ZONE:*	*FUNCTION:*		*SWITCH LABEL:*		
	1) a	ON		FRONT ON		
	2) b,c,d	ON		BACK ON		
	3) a,b,c,d	DIM UP		↑		
	4) a,b,c,d	DIM DOWN		↓		
103B	**GYM/MULTI**	H1A	4 a	WIRELESS CONTROLLER	WIRELESS SWITCH, OCC SENSOR AUTO ON 50%, PHOTOCELL	FRONT SKYLIGHT ZONE
			b	WIRELESS CONTROLLER	WIRELESS SWITCH, OCC SENSOR AUTO ON 50%, PHOTOCELL	BACK SKYLIGHT ZONE
4-BUTTON SWITCH:	*ZONE:*	*FUNCTION:*		*SWITCH LABEL:*		
	1) a	ON		FRONT ON		
	2) b	ON		BACK ON		
	3) a,b	DIM UP		↑		
	4) a,b	DIM DOWN		↓		
104	**WOMENS TOILET**	H1A	6	WIRELESS CONTROLLER	WIRELESS SWITCH, OCC SENSOR AUTO ON	GENERAL LIGHTING
1-BUTTON SWITCH	*ZONE:*	*FUNCTION:*		*SWITCH LABEL:*		
	1) a	ON		NONE		
105	**MENS TOILET**	H1A	6	WIRELESS CONTROLLER	WIRELESS SWITCH, OCC SENSOR AUTO ON	GENERAL LIGHTING
1-BUTTON SWITCH	*ZONE:*	*FUNCTION:*		*SWITCH LABEL:*		
	1) a	ON		NONE		
106	**VESTIBULE**	H1A	5 a	WIRELESS CONTROLLER	WIRELESS SWITCH, OCC SENSOR AUTO ON	GENERAL LIGHTING
KEYED SWITCH	*ZONE:*	*FUNCTION:*		*SWITCH LABEL:*		
	1) a	ON/OFF		NONE		
107	**OFFICE**	H1A	5 a	WIRELESS CONTROLLER	WIRELESS SWITCH, OCC SENSOR AUTO ON 50%	GENERAL LIGHTING
3-BUTTON SWITCH:	*ZONE:*	*FUNCTION:*		*SWITCH LABEL:*		
	1) a	ON/OFF		ON/OFF		
	2) a	DIM UP		↑		
	3) a	DIM DOWN		↓		
	PLUG LOAD CONTROLS					
		L1A	24b C		TIMER & OVERRIDE VIA LIGHTING CONTROL SYSTEM	
110	**VESTIBULE**	H1A	5 a	WIRELESS CONTROLLER	WIRELESS SWITCH, OCC SENSOR AUTO ON	DAYLIGHT ZONE 1
KEYED SWITCH	*ZONE:*	*FUNCTION:*		*SWITCH LABEL:*		
	1) a	ON/OFF		NONE		

KEVIN E. WARTELLE — STATE OF WASHINGTON — 44109 — REGISTERED PROFESSIONAL ENGINEER

3700 E MERCER WAY
BARNABIE POINT PROJECT

NO.	DATE	DESCRIPTION
		4 JUNE 2025
		BUILDING PERMIT

PROJECT: 23-101

LIGHTING CONTROL SCHEDULE

E-703

O:\CAD\WIP\ Kvb 23-101\E-700.dwg
2025-06-04 2:29 PM

LIGHTING CONTROL SCHEDULE

CONTROLLER	ROOM	PANEL	CIRCUIT	INTERFACE	DEVICES	DESCRIPTION
111	**CIRC**	H1A	7 a	WIRELESS CONTROLLER	WIRELESS SWITCH, OCC SENSOR AUTO ON	GENERAL LIGHTING
KEYED SWITCH	*ZONE:*	*FUNCTION:*		*SWITCH LABEL:*		
	1) a	ON/OFF		(NONE)		
112	**OFFICE**	H1A	4 a	WIRELESS CONTROLLER	WIRELESS SWITCH, OCC SENSOR AUTO ON 50%,PHOTOCELL	DAYLIGHT ZONE 1
			b	WIRELESS CONTROLLER	WIRELESS SWITCH, OCC SENSOR AUTO ON 50%,PHOTOCELL	DAYLIGHT ZONE 2
3-BUTTON SWITCH:	*ZONE:*	*FUNCTION:*		*SWITCH LABEL:*		
	1) a,b	ON/OFF		ON/OFF		
	2) a,b	DIM UP		↑		
	3) a,b	DIM DOWN		↓		
	PLUG LOAD CONTROLS					
		L1A	22b C		TIMER & OVERRIDE VIA LIGHTING CONTROL SYSTEM	
113	**CLASSROOM**	H1A	5 a	WIRELESS CONTROLLER	WIRELESS SWITCH, OCC SENSOR AUTO ON 50%,PHOTOCELL	FRONT DAYLIGHT ZONE 1
			b	WIRELESS CONTROLLER	WIRELESS SWITCH, OCC SENSOR AUTO ON 50%	FRONT DAYLIGHT ZONE 2
			c	WIRELESS CONTROLLER	WIRELESS SWITCH, OCC SENSOR AUTO ON 50%	FRONT
			d	WIRELESS CONTROLLER	WIRELESS SWITCH, OCC SENSOR AUTO ON 50%,PHOTOCELL	BACK DAYLIGHT ZONE 1
			e	WIRELESS CONTROLLER	WIRELESS SWITCH, OCC SENSOR AUTO ON 50%	BACK DAYLIGHT ZONE 2
			f	WIRELESS CONTROLLER	WIRELESS SWITCH, OCC SENSOR AUTO ON 50%	BACK
4-BUTTON SWITCH:	*ZONE:*	*FUNCTION:*		*SWITCH LABEL:*		
	1) a,b,c	ON/OFF		FRONT ON/OFF		
	2) d,e,f	ON/OFF		BACK ON/OFF		
	3) a,b,c,d,e,f	DIM UP		↑		
	4) a,b,c,d,e,f	DIM DOWN		↓		
	PLUG LOAD CONTROLS					
		L1A	29 C		TIMER & OVERRIDE VIA LIGHTING CONTROL SYSTEM	
114	**ADMIN**	H1A	3 a	WIRELESS CONTROLLER	WIRELESS SWITCH, OCC SENSOR AUTO ON 50%	GENERAL LIGHTING
3-BUTTON SWITCH:	*ZONE:*	*FUNCTION:*		*SWITCH LABEL:*		
	1) a	ON/OFF		ON/OFF		
	2) a	DIM UP		↑		
	3) a	DIM DOWN		↓		
	PLUG LOAD CONTROLS					
		L1A	6 C		TIMER & OVERRIDE VIA LIGHTING CONTROL SYSTEM	
114A	**OFFICE**	H1A	3 a	WIRELESS CONTROLLER	WIRELESS SWITCH, OCC SENSOR AUTO ON 50%	GENERAL LIGHTING
3-BUTTON SWITCH:	*ZONE:*	*FUNCTION:*		*SWITCH LABEL:*		
	1) a	ON/OFF		ON/OFF		
	2) a	DIM UP		↑		
	3) a	DIM DOWN		↓		
	PLUG LOAD CONTROLS					
		L1A	8b C		TIMER & OVERRIDE VIA LIGHTING CONTROL SYSTEM	
114B	**OFFICE**	H1A	3 a	WIRELESS CONTROLLER	WIRELESS SWITCH, OCC SENSOR AUTO ON 50%	GENERAL LIGHTING
3-BUTTON SWITCH:	*ZONE:*	*FUNCTION:*		*SWITCH LABEL:*		
	1) a	ON/OFF		ON/OFF		
	2) a	DIM UP		↑		
	3) a	DIM DOWN		↓		
	PLUG LOAD CONTROLS					
		L1A	10b C		TIMER & OVERRIDE VIA LIGHTING CONTROL SYSTEM	
114C	**OFFICE**	H1A	3 a	WIRELESS CONTROLLER	WIRELESS SWITCH, OCC SENSOR AUTO ON 50%	GENERAL LIGHTING
3-BUTTON SWITCH:	*ZONE:*	*FUNCTION:*		*SWITCH LABEL:*		
	1) a	ON/OFF		ON/OFF		
	2) a	DIM UP		↑		
	3) a	DIM DOWN		↓		
	PLUG LOAD CONTROLS					
		L1A	12b C		TIMER & OVERRIDE VIA LIGHTING CONTROL SYSTEM	
114D	**OFFICE**	H1A	3 a	WIRELESS CONTROLLER	WIRELESS SWITCH, OCC SENSOR AUTO ON 50%	GENERAL LIGHTING
3-BUTTON SWITCH:	*ZONE:*	*FUNCTION:*		*SWITCH LABEL:*		
	1) a	ON/OFF		ON/OFF		
	2) a	DIM UP		↑		
	3) a	DIM DOWN		↓		
	PLUG LOAD CONTROLS					
		L1A	14b C		TIMER & OVERRIDE VIA LIGHTING CONTROL SYSTEM	
115	**CLASSROOM**	H1A	1 a	WIRELESS CONTROLLER	WIRELESS SWITCH, OCC SENSOR AUTO ON 50%,PHOTOCELL	FRONT DAYLIGHT ZONE 1
			b	WIRELESS CONTROLLER	WIRELESS SWITCH, OCC SENSOR AUTO ON 50%	FRONT DAYLIGHT ZONE 2
			c	WIRELESS CONTROLLER	WIRELESS SWITCH, OCC SENSOR AUTO ON 50%	FRONT
			d	WIRELESS CONTROLLER	WIRELESS SWITCH, OCC SENSOR AUTO ON 50%,PHOTOCELL	BACK DAYLIGHT ZONE 1
			e	WIRELESS CONTROLLER	WIRELESS SWITCH, OCC SENSOR AUTO ON 50%	BACK DAYLIGHT ZONE 2
			f	WIRELESS CONTROLLER	WIRELESS SWITCH, OCC SENSOR AUTO ON 50%	BACK
4-BUTTON SWITCH:	*ZONE:*	*FUNCTION:*		*SWITCH LABEL:*		
	1) a,b,c	ON/OFF		FRONT ON/OFF		
	2) d,e,f	ON/OFF		BACK ON/OFF		
	3) a,b,c,d,e,f	DIM UP		↑		
	4) a,b,c,d,e,f	DIM DOWN		↓		
	PLUG LOAD CONTROLS					
		L1A	23 C		TIMER & OVERRIDE VIA LIGHTING CONTROL SYSTEM	
116	**CLASSROOM**	H1A	1 a	WIRELESS CONTROLLER	WIRELESS SWITCH, OCC SENSOR AUTO ON 50%,PHOTOCELL	FRONT DAYLIGHT ZONE 1
			b	WIRELESS CONTROLLER	WIRELESS SWITCH, OCC SENSOR AUTO ON 50%	FRONT DAYLIGHT ZONE 2
			c	WIRELESS CONTROLLER	WIRELESS SWITCH, OCC SENSOR AUTO ON 50%	FRONT
			d	WIRELESS CONTROLLER	WIRELESS SWITCH, OCC SENSOR AUTO ON 50%,PHOTOCELL	BACK DAYLIGHT ZONE 1
			e	WIRELESS CONTROLLER	WIRELESS SWITCH, OCC SENSOR AUTO ON 50%	BACK DAYLIGHT ZONE 2
			f	WIRELESS CONTROLLER	WIRELESS SWITCH, OCC SENSOR AUTO ON 50%	BACK
4-BUTTON SWITCH:	*ZONE:*	*FUNCTION:*		*SWITCH LABEL:*		
	1) a,b,c	ON/OFF		FRONT ON/OFF		
	2) d,e,f	ON/OFF		BACK ON/OFF		
	3) a,b,c,d,e,f	DIM UP		↑		
	4) a,b,c,d,e,f	DIM DOWN		↓		
	PLUG LOAD CONTROLS					
		L1A	17 C		TIMER & OVERRIDE VIA LIGHTING CONTROL SYSTEM	

TFWB ENGINEERS INC
Travis Fitzmaurice Wartelle Balangue Engineers Inc.
1200 Westlake Ave. N., #509
Seattle, WA 98109
p: 206-285-7228 | info@tf-wb.com

3427 BEACON AVE S
SEATTLE 98144
ANJALI@AGRANITDESIGN.COM
206-512-4209

anjali grant design LLC

KEVIN E. WARTELLE — STATE OF WASHINGTON — 44109 — REGISTERED PROFESSIONAL ENGINEER

3700 E MERCER WAY
BARNABIE POINT PROJECT

NO.	DATE	DESCRIPTION

4 JUNE 2025
BUILDING PERMIT

PROJECT: 23-101

LIGHTING CONTROL SCHEDULE

E-704

O:\CAD\ARKY Kvk 23-101\E-700.dwg
2025-06-04 2:29 PM

TFWB ENGINEERS
Travis Fitzmaurice Wartelle Balangue Engineers Inc.
1200 Westlake Ave. N., #509
Seattle, WA 98109
p: 206-285-7228 | info@tf-wb.com

3427 BEACON AVE S
SEATTLE 98144
ANJALI@AGRANTDESIGN.COM
206-512-4209

anjali grant design LLC

LIGHTING CONTROL SCHEDULE

CONTROLLER	ROOM	PANEL	CIRCUIT	INTERFACE	DEVICES	DESCRIPTION
117	**PRESCHOOL CLASSROOM**	H1A	1 a	WIRELESS CONTROLLER	WIRELESS SWITCH, OCC SENSOR AUTO ON 50%, PHOTOCELL	BACK DAYLIGHT ZONE 1
			b	WIRELESS CONTROLLER	WIRELESS SWITCH, OCC SENSOR AUTO ON 50%, PHOTOCELL	BACK DAYLIGHT ZONE 2
			c	WIRELESS CONTROLLER	WIRELESS SWITCH, OCC SENSOR AUTO ON 50%	BACK GENERAL
(2)4-BUTTON SWITCH:	*ZONE:*	*FUNCTION:*		*SWITCH LABEL:*		
	1) a	ON/OFF		FRONT ON/OFF		
	2) b,c	ON/OFF		BACK ON/OFF		
	3) a,b,c	DIM UP		↑		
	4) a,b,c	DIM DOWN		↓		
	PLUG LOAD CONTROLS					
		L1A	11 C		TIMER & OVERRIDE VIA LIGHTING CONTROL SYSTEM	
118	**PRESCHOOL CLASSROOM**	H1A	5 a	WIRELESS CONTROLLER	WIRELESS SWITCH, OCC SENSOR AUTO ON 50%	FRONT DAYLIGHT ZONE 1
			b	WIRELESS CONTROLLER	WIRELESS SWITCH, OCC SENSOR AUTO ON 50%	FRONT DAYLIGHT ZONE 2
			c	WIRELESS CONTROLLER	WIRELESS SWITCH, OCC SENSOR AUTO ON 50%	BACK DAYLIGHT ZONE 1
			d	WIRELESS CONTROLLER	WIRELESS SWITCH, OCC SENSOR AUTO ON 50%	BACK DAYLIGHT ZONE 2
(2)4-BUTTON SWITCH:	*ZONE:*	*FUNCTION:*		*SWITCH LABEL:*		
	1) a,b	ON/OFF		FRONT ON/OFF		
	2) c,d	ON/OFF		BACK ON/OFF		
	3) a,b,c,d	DIM UP		↑		
	4) a,b,c,d	DIM DOWN		↓		
	PLUG LOAD CONTROLS					
		L1A	5 C		TIMER & OVERRIDE VIA LIGHTING CONTROL SYSTEM	
119	**LRC-1**	H1A	5 a	WIRELESS CONTROLLER	WIRELESS SWITCH, OCC SENSOR AUTO ON 50%	DAYLIGHT ZONE 1
			b	WIRELESS CONTROLLER	WIRELESS SWITCH, OCC SENSOR AUTO ON 50%	DAYLIGHT ZONE 2
3-BUTTON SWITCH:	*ZONE:*	*FUNCTION:*		*SWITCH LABEL:*		
	1) a,b	ON/OFF		ON/OFF		
	2) a,b	DIM UP		↑		
	3) a,b	DIM DOWN		↓		
	PLUG LOAD CONTROLS					
		L1A	7b C		TIMER & OVERRIDE VIA LIGHTING CONTROL SYSTEM	
200	**CIRC**	H2A	1 d	WIRELESS CONTROLLER	WIRELESS SWITCH, OCC SENSOR AUTO ON	GENERAL LIGHTING
KEYED SWITCH	*ZONE:*	*FUNCTION:*		*SWITCH LABEL:*		
	1) d	ON/OFF		(NONE)		
200A	**BREAKOUT/LIBRARY**	H2A	1 a	WIRELESS CONTROLLER	WIRELESS SWITCH, OCC SENSOR AUTO ON 50%, PHOTOCELL	FRONT DAYLIGHT ZONE 1
			b	WIRELESS CONTROLLER	WIRELESS SWITCH, OCC SENSOR AUTO ON 50%, PHOTOCELL	BACK DAYLIGHT ZONE 2
			c	WIRELESS CONTROLLER	WIRELESS SWITCH, OCC SENSOR AUTO ON 50%	BACK GENERAL
5-BUTTON SWITCH:	*ZONE:*	*FUNCTION:*		*SWITCH LABEL:*		
	1) a	ON/OFF		FRONT ON/OFF		
	2) b,c	ON/OFF		BACK ON/OFF		
	4) a,b,c	DIM UP		↑		
	5) a,b,c	DIM DOWN		↓		
	PLUG LOAD CONTROLS					
		L2A	15 C		TIMER & OVERRIDE VIA LIGHTING CONTROL SYSTEM	
200F	**SHARED IDF**	H2A	2 a	WIRELESS CONTROLLER	WIRELESS SWITCH, OCC SENSOR AUTO ON	GENERAL LIGHTING
1-BUTTON SWITCH	*ZONE:*	*FUNCTION:*		*SWITCH LABEL:*		
	1) a	ON/OFF		NONE		
202	**CLASSROOM**	H2A	3 a	WIRELESS CONTROLLER	WIRELESS SWITCH, OCC SENSOR AUTO ON 50%, PHOTOCELL	FRONT DAYLIGHT ZONE 1
			b	WIRELESS CONTROLLER	WIRELESS SWITCH, OCC SENSOR AUTO ON 50%, PHOTOCELL	FRONT DAYLIGHT ZONE 2
			c	WIRELESS CONTROLLER	WIRELESS SWITCH, OCC SENSOR AUTO ON 50%	FRONT GENERAL
			d	WIRELESS CONTROLLER	WIRELESS SWITCH, OCC SENSOR AUTO ON 50%	BACK GENERAL
4-BUTTON SWITCH:	*ZONE:*	*FUNCTION:*		*SWITCH LABEL:*		
	1) a,b,c	ON/OFF		FRONT ON/OFF		
	2) d	ON/OFF		BACK ON/OFF		
	3) a,b,c,d	DIM UP		↑		
	4) a,b,c,d	DIM DOWN		↓		
	PLUG LOAD CONTROLS					
		L2A	18 C		TIMER & OVERRIDE VIA LIGHTING CONTROL SYSTEM	
203	**CLASSROOM**	H2A	3 a	WIRELESS CONTROLLER	WIRELESS SWITCH, OCC SENSOR AUTO ON 50%, PHOTOCELL	FRONT DAYLIGHT ZONE 1
			b	WIRELESS CONTROLLER	WIRELESS SWITCH, OCC SENSOR AUTO ON 50%, PHOTOCELL	FRONT DAYLIGHT ZONE 2
			c	WIRELESS CONTROLLER	WIRELESS SWITCH, OCC SENSOR AUTO ON 50%	FRONT GENERAL
			d	WIRELESS CONTROLLER	WIRELESS SWITCH, OCC SENSOR AUTO ON 50%	BACK GENERAL
4-BUTTON SWITCH:	*ZONE:*	*FUNCTION:*		*SWITCH LABEL:*		
	1) a,b,c	ON/OFF		FRONT ON/OFF		
	2) d	ON/OFF		BACK ON/OFF		
	3) a,b,c,d	DIM UP		↑		
	4) a,b,c,d	DIM DOWN		↓		
	PLUG LOAD CONTROLS					
		L2A	12 C		TIMER & OVERRIDE VIA LIGHTING CONTROL SYSTEM	

KEVIN E. WARTELLE — STATE OF WASHINGTON — 44109 — REGISTERED PROFESSIONAL ENGINEER

3700 E MERCER WAY
BARNABIE POINT PROJECT

NO.	DATE	DESCRIPTION
		4 JUNE 2025
		BUILDING PERMIT

PROJECT: 23-101

LIGHTING CONTROL SCHEDULE

E-705

D:\CADWHT Kd 23-101E-700.dwg
2025-06-04 2:51 PM

LIGHTING CONTROL SCHEDULE

CONTROLLER	ROOM	PANEL	CIRCUIT	INTERFACE	DEVICES	DESCRIPTION
204	**CLASSROOM**	H2A	3 a	WIRELESS CONTROLLER	WIRELESS SWITCH, OCC SENSOR AUTO ON 50%, PHOTOCELL	FRONT DAYLIGHT ZONE 1
			b	WIRELESS CONTROLLER	WIRELESS SWITCH, OCC SENSOR AUTO ON 50%, PHOTOCELL	FRONT DAYLIGHT ZONE 2
			c	WIRELESS CONTROLLER	WIRELESS SWITCH, OCC SENSOR AUTO ON 50%	FRONT GENERAL
			d	WIRELESS CONTROLLER	WIRELESS SWITCH, OCC SENSOR AUTO ON 50%	BACK GENERAL
4-BUTTON SWITCH:	*ZONE:*	*FUNCTION:*		*SWITCH LABEL:*		
	1) a,b,c	ON/OFF		FRONT ON/OFF		
	2) d	ON/OFF		BACK ON/OFF		
	3) a,b,c,d	DIM UP		↑		
	4) a,b,c,d	DIM DOWN		↓		
	PLUG LOAD CONTROLS					
		L2A	6 C		TIMER & OVERRIDE VIA LIGHTING CONTROL SYSTEM	
205	**LRC-2**	H2A	1 a	WIRELESS CONTROLLER	WIRELESS SWITCH, OCC SENSOR AUTO ON 50%	DAYLIGHT ZONE 1
			b	WIRELESS CONTROLLER	WIRELESS SWITCH, OCC SENSOR AUTO ON 50%	DAYLIGHT ZONE 2
3-BUTTON SWITCH:	*ZONE:*	*FUNCTION:*		*SWITCH LABEL:*		
	1) a,b	ON/OFF		ON/OFF		
	2) a,b	DIM UP		↑		
	3) a,b	DIM DOWN		↓		
	PLUG LOAD CONTROLS					
		L2A	17b C		TIMER & OVERRIDE VIA LIGHTING CONTROL SYSTEM	
206	**CLASSROOM**	H2A	5 a	WIRELESS CONTROLLER	WIRELESS SWITCH, OCC SENSOR AUTO ON 50%	FRONT GENERAL
			b	WIRELESS CONTROLLER	WIRELESS SWITCH, OCC SENSOR AUTO ON 50%, PHOTOCELL	BACK DAYLIGHT ZONE 1
			c	WIRELESS CONTROLLER	WIRELESS SWITCH, OCC SENSOR AUTO ON 50%, PHOTOCELL	BACK DAYLIGHT ZONE 2
			d	WIRELESS CONTROLLER	WIRELESS SWITCH, OCC SENSOR AUTO ON 50%	BACK GENERAL
4-BUTTON SWITCH:	*ZONE:*	*FUNCTION:*		*SWITCH LABEL:*		
	1) a	ON/OFF		FRONT ON/OFF		
	2) b,c,d	ON/OFF		BACK ON/OFF		
	3) a,b,c,d	DIM UP		↑		
	4) a,b,c,d	DIM DOWN		↓		
	PLUG LOAD CONTROLS					
		L2A	11 C		TIMER & OVERRIDE VIA LIGHTING CONTROL SYSTEM	
207	**CLASSROOM**	H2A	5 a	WIRELESS CONTROLLER	WIRELESS SWITCH, OCC SENSOR AUTO ON 50%, PHOTOCELL	FRONT DAYLIGHT ZONE 1
			b	WIRELESS CONTROLLER	WIRELESS SWITCH, OCC SENSOR AUTO ON 50%, PHOTOCELL	FRONT DAYLIGHT ZONE 2
			c	WIRELESS CONTROLLER	WIRELESS SWITCH, OCC SENSOR AUTO ON 50%	FRONT GENERAL
			d	WIRELESS CONTROLLER	WIRELESS SWITCH, OCC SENSOR AUTO ON 50%	BACK GENERAL
4-BUTTON SWITCH:	*ZONE:*	*FUNCTION:*		*SWITCH LABEL:*		
	1) a,b,c	ON/OFF		FRONT ON/OFF		
	2) d	ON/OFF		BACK ON/OFF		
	3) a,b,c,d	DIM UP		↑		
	4) a,b,c,d	DIM DOWN		↓		
	PLUG LOAD CONTROLS					
		L2A	5 C		TIMER & OVERRIDE VIA LIGHTING CONTROL SYSTEM	
211	**CIRC**	H2A	7 a	WIRELESS CONTROLLER	WIRELESS SWITCH, OCC SENSOR AUTO ON	GENERAL LIGHTING
KEYED SWITCH	*ZONE:*	*FUNCTION:*		*SWITCH LABEL:*		
	1) a	ON/OFF		(NONE)		
211A	**BREAK ROOM**	H2A	7 a	WIRELESS CONTROLLER	WIRELESS SWITCH, OCC SENSOR AUTO ON 50%, PHOTOCELL	DAYLIGHT ZONE 1
			b	WIRELESS CONTROLLER	WIRELESS SWITCH, OCC SENSOR AUTO ON 50%, PHOTOCELL	GENERAL
3-BUTTON SWITCH:	*ZONE:*	*FUNCTION:*		*SWITCH LABEL:*		
	1) a,b	ON/OFF		ON/OFF		
	2) a,b	DIM UP		↑		
	3) a,b	DIM DOWN		↓		
212	**RENTAL**	H2A	7 a	WIRELESS CONTROLLER	DIG SWITCH, OCC SENSOR AUTO ON 50%, PHOTOCELL	BACK DAYLIGHT ZONE 1
			b	WIRELESS CONTROLLER	DIG SWITCH, OCC SENSOR AUTO ON 50%, PHOTOCELL	BACK DAYLIGHT ZONE 2
			c	WIRELESS CONTROLLER	WIRELESS SWITCH, OCC SENSOR AUTO ON 50%	FRONT
4-BUTTON SWITCH:	*ZONE:*	*FUNCTION:*		*SWITCH LABEL:*		
	1) a,b,c	ON/OFF		ON/OFF		
	2) a,b,c	DIM UP		↑		
	3) a,b,c	DIM DOWN		↓		
212A	**CONF ROOM**	H2A	7 a	WIRELESS CONTROLLER	WIRELESS SWITCH, OCC SENSOR AUTO ON 50%	GENERAL LIGHTING
3-BUTTON SWITCH:	*ZONE:*	*FUNCTION:*		*SWITCH LABEL:*		
	1) a	ON/OFF		ON/OFF		
	2) a	DIM UP		↑		
	3) a	DIM DOWN		↓		
	PLUG LOAD CONTROLS					
		L2B	3a C		TIMER & OVERRIDE VIA LIGHTING CONTROL SYSTEM	
212B	**OFFICE**	H2A	7 a	WIRELESS CONTROLLER	WIRELESS SWITCH, OCC SENSOR AUTO ON 50%	GENERAL LIGHTING
3-BUTTON SWITCH:	*ZONE:*	*FUNCTION:*		*SWITCH LABEL:*		
	1) a	ON/OFF		ON/OFF		
	2) a	DIM UP		↑		
	3) a	DIM DOWN		↓		
	PLUG LOAD CONTROLS					
		L2B	5a C		TIMER & OVERRIDE VIA LIGHTING CONTROL SYSTEM	
213	**RENTAL**	H2A	9 a	WIRELESS CONTROLLER	DIG SWITCH, OCC SENSOR AUTO ON 50%, PHOTOCELL	BACK DAYLIGHT ZONE 1
			b	WIRELESS CONTROLLER	DIG SWITCH, OCC SENSOR AUTO ON 50%, PHOTOCELL	BACK DAYLIGHT ZONE 2
			c	WIRELESS CONTROLLER	WIRELESS SWITCH, OCC SENSOR AUTO ON 50%	FRONT
4-BUTTON SWITCH:	*ZONE:*	*FUNCTION:*		*SWITCH LABEL:*		
	1) a,b,c	ON/OFF		ON/OFF		
	3) a,b,c	DIM UP		↑		
	4) a,b,c	DIM DOWN		↓		

TFWB ENGINEERS INC
Travis Fitzmaurice Wartelle Balangue Engineers Inc.
1200 Westlake Ave. N., #509
Seattle, WA 98109
p: 206-285-7228 | info@tf-wb.com

3427 BEACON AVE S
SEATTLE 98144
ANJALI@AGRANTDESIGN.COM
206-512-4209

anjali grant design LLC

KEVIN E. WARTELLE — STATE OF WASHINGTON — 44109 — REGISTERED PROFESSIONAL ENGINEER

3700 E MERCER WAY
BARNABIE POINT PROJECT

NO.	DATE	DESCRIPTION

4 JUNE 2025
BUILDING PERMIT

PROJECT: 23-101

LIGHTING CONTROL SCHEDULE

E-706

O:\CAD\PMT Fol...23-101E-700.dwg
2025/06/2 2:49:57 PM

TFWB ENGINEERS INC
Travis Fitzmaurice Wartelle
Balangue Engineers Inc.
1200 Westlake Ave. N., #509
Seattle, WA 98109
p: 206-285-7228 | info@tf-wb.com

3427 BEACON AVE S
SEATTLE 98144
ANJALI@AGRANTDESIGN.COM
206-512-4209

anjali grant design LLC

LIGHTING CONTROL SCHEDULE

CONTROLLER	ROOM	PANEL	CIRCUIT	INTERFACE	DEVICES	DESCRIPTION
213A	**CONF ROOM**	H2A	9 a	WIRELESS CONTROLLER	WIRELESS SWITCH, OCC SENSOR AUTO ON 50%	GENERAL LIGHTING
3-BUTTON SWITCH:	*ZONE:*	*FUNCTION:*		*SWITCH LABEL:*		
	1) a	ON/OFF		ON/OFF		
	2) a	DIM UP		↑		
	3) a	DIM DOWN		↓		
	PLUG LOAD CONTROLS					
		L2B	4b C		TIMER & OVERRIDE VIA LIGHTING CONTROL SYSTEM	
213B	**WORKROOM**	H2A	9 a	WIRELESS CONTROLLER	WIRELESS SWITCH, OCC SENSOR AUTO ON 50%	GENERAL LIGHTING
3-BUTTON SWITCH:	*ZONE:*	*FUNCTION:*		*SWITCH LABEL:*		
	1) a	ON/OFF		ON/OFF		
	2) a	DIM UP		↑		
	3) a	DIM DOWN		↓		
	PLUG LOAD CONTROLS					
		L2B	15 C		TIMER & OVERRIDE VIA LIGHTING CONTROL SYSTEM	
213C	**OFFICE**	H2A	6b a	WIRELESS CONTROLLER	WIRELESS SWITCH, OCC SENSOR AUTO ON 50%	GENERAL LIGHTING
3-BUTTON SWITCH:	*ZONE:*	*FUNCTION:*		*SWITCH LABEL:*		
	1) a	ON/OFF		ON/OFF		
	2) a	DIM UP		↑		
	3) a	DIM DOWN		↓		
	PLUG LOAD CONTROLS					
		L2B	8b C		TIMER & OVERRIDE VIA LIGHTING CONTROL SYSTEM	
213D	**MECH MEZZ**	H2A	9	WIRELESS CONTROLLER	WIRELESS SWITCH, OCC SENSOR AUTO ON	GENERAL LIGHTING
1-BUTTON SWITCH	*ZONE:*	*FUNCTION:*		*SWITCH LABEL:*		
	1) a	ON/OFF		NONE		
300	**CIRCULATION**	H3A	8 a	WIRELESS CONTROLLER	WIRELESS SWITCH, OCC SENSOR AUTO ON, PHOTOCELL	DAYLIGHT ZONE 1
			b	WIRELESS CONTROLLER	WIRELESS SWITCH, OCC SENSOR AUTO ON, PHOTOCELL	DAYLIGHT ZONE 2
			c	WIRELESS CONTROLLER	WIRELESS SWITCH, OCC SENSOR AUTO ON	GENERAL
KEYED SWITCH	*ZONE:*	*FUNCTION:*		*SWITCH LABEL:*		
	1) a,b,c	ON/OFF		(NONE)		
300F	**RENTAL OFFICE**	H3A	3 a	WIRELESS CONTROLLER	WIRELESS SWITCH, OCC SENSOR AUTO ON 50%	GENERAL LIGHTING
3-BUTTON SWITCH:	*ZONE:*	*FUNCTION:*		*SWITCH LABEL:*		
	1) a	ON/OFF		ON/OFF		
	2) a	DIM UP		↑		
	3) a	DIM DOWN		↓		
	PLUG LOAD CONTROLS					
		L3A	15 C		TIMER & OVERRIDE VIA LIGHTING CONTROL SYSTEM	
301A	**OFFICE**	H3A	5 a	WIRELESS CONTROLLER	WIRELESS SWITCH, OCC SENSOR AUTO ON 50%, PHOTOCELL	DAYLIGHT ZONE 1
			b	WIRELESS CONTROLLER	WIRELESS SWITCH, OCC SENSOR AUTO ON 50%, PHOTOCELL	DAYLIGHT ZONE 2
3-BUTTON SWITCH:	*ZONE:*	*FUNCTION:*		*SWITCH LABEL:*		
	1) a,b	ON/OFF		ON/OFF		
	2) a,b	DIM UP		↑		
	3) a,b	DIM DOWN		↓		
	PLUG LOAD CONTROLS					
		L3B	23b C		TIMER & OVERRIDE VIA LIGHTING CONTROL SYSTEM	
301B	**OFFICE**	H3A	5 a	WIRELESS CONTROLLER	WIRELESS SWITCH, OCC SENSOR AUTO ON 50%	GENERAL LIGHTING
3-BUTTON SWITCH:	*ZONE:*	*FUNCTION:*		*SWITCH LABEL:*		
	1) a	ON/OFF		ON/OFF		
	2) a	DIM UP		↑		
	3) a	DIM DOWN		↓		
	PLUG LOAD CONTROLS					
		L3B	21b C		TIMER & OVERRIDE VIA LIGHTING CONTROL SYSTEM	
301C	**OFFICE**	H3A	5 a	WIRELESS CONTROLLER	WIRELESS SWITCH, OCC SENSOR AUTO ON 50%	GENERAL LIGHTING
3-BUTTON SWITCH:	*ZONE:*	*FUNCTION:*		*SWITCH LABEL:*		
	1) a	ON/OFF		ON/OFF		
	2) a	DIM UP		↑		
	3) a	DIM DOWN		↓		
	PLUG LOAD CONTROLS					
		L3B	19b C		TIMER & OVERRIDE VIA LIGHTING CONTROL SYSTEM	
301D	**ENTRY/ART/STEM**	H2A	5 a	WIRELESS CONTROLLER	WIRELESS SWITCH, OCC SENSOR AUTO ON 50%, PHOTOCELL	DAYLIGHT ZONE 1A
			b	WIRELESS CONTROLLER	WIRELESS SWITCH, OCC SENSOR AUTO ON 50%, PHOTOCELL	DAYLIGHT ZONE 2A
			c	WIRELESS CONTROLLER	WIRELESS SWITCH, OCC SENSOR AUTO ON 50%	FRONT GENERAL
			d	WIRELESS CONTROLLER	WIRELESS SWITCH, OCC SENSOR AUTO ON 50%, PHOTOCELL	DAYLIGHT ZONE 1B
			e	WIRELESS CONTROLLER	WIRELESS SWITCH, OCC SENSOR AUTO ON 50%, PHOTOCELL	DAYLIGHT ZONE 2B
4-BUTTON SWITCH:	*ZONE:*	*FUNCTION:*		*SWITCH LABEL:*		
	1) a,b,c	ON/OFF		ON/OFF		
	2) d,e	ON/OFF		ON/OFF		
	3) a,b,c,d,e	DIM UP		↑		
	4) a,b,c,d,e	DIM DOWN		↓		
	PLUG LOAD CONTROLS					
		L3B	24 C 25b		TIMER & OVERRIDE VIA LIGHTING CONTROL SYSTEM	



3700 E MERCER WAY
BARNABIE POINT PROJECT

NO.	DATE	DESCRIPTION

4 JUNE 2025

BUILDING PERMIT

PROJECT: 23-101

LIGHTING CONTROL SCHEDULE

E-707

D:\DOCUMENT FILES\ 23-101\E-700.dwg
2025-06-04 2:29 PM

LIGHTING CONTROL SCHEDULE

CONTROLLER	ROOM	PANEL	CIRCUIT	INTERFACE	DEVICES	DESCRIPTION
301E	**SNOEZELEN ROOM**	H3A	5 a	WIRELESS CONTROLLER	WIRELESS SWITCH, OCC SENSOR AUTO ON 50%, PHOTOCELL	DAYLIGHT ZONE 1
			b	WIRELESS CONTROLLER	WIRELESS SWITCH, OCC SENSOR AUTO ON 50%, PHOTOCELL	DAYLIGHT ZONE 2
3-BUTTON SWITCH:	*ZONE:*	*FUNCTION:*		*SWITCH LABEL:*		
	1) a,b	ON/OFF		ON/OFF		
	2) a,b	DIM UP		↑		
	3) a,b	DIM DOWN		↓		
	PLUG LOAD CONTROLS					
		L3B	26b C		TIMER & OVERRIDE VIA LIGHTING CONTROL SYSTEM	
301F	**MUSIC**	H3A	5 a	WIRELESS CONTROLLER	WIRELESS SWITCH, OCC SENSOR AUTO ON 50%, PHOTOCELL	DAYLIGHT ZONE 1
			b	WIRELESS CONTROLLER	WIRELESS SWITCH, OCC SENSOR AUTO ON 50%, PHOTOCELL	DAYLIGHT ZONE 2
3-BUTTON SWITCH:	*ZONE:*	*FUNCTION:*		*SWITCH LABEL:*		
	1) a,b	ON/OFF		ON/OFF		
	2) a,b	DIM UP		↑		
	3) a,b	DIM DOWN		↓		
301G	**GAME/TECH**	H3A	5 a	WIRELESS CONTROLLER	WIRELESS SWITCH, OCC SENSOR AUTO ON 50%, PHOTOCELL	DAYLIGHT ZONE 1
			b	WIRELESS CONTROLLER	WIRELESS SWITCH, OCC SENSOR AUTO ON 50%, PHOTOCELL	DAYLIGHT ZONE 2
3-BUTTON SWITCH:	*ZONE:*	*FUNCTION:*		*SWITCH LABEL:*		
	1) a,b	ON/OFF		ON/OFF		
	2) a,b	DIM UP		↑		
	3) a,b	DIM DOWN		↓		
301H	**OFFICE**	H3A	5 a	WIRELESS CONTROLLER	WIRELESS SWITCH, OCC SENSOR AUTO ON 50%, PHOTOCELL	DAYLIGHT ZONE 1
			b	WIRELESS CONTROLLER	WIRELESS SWITCH, OCC SENSOR AUTO ON 50%, PHOTOCELL	DAYLIGHT ZONE 2
			c	WIRELESS CONTROLLER	WIRELESS SWITCH, OCC SENSOR AUTO ON 50%,	GENERAL
3-BUTTON SWITCH:	*ZONE:*	*FUNCTION:*		*SWITCH LABEL:*		
	1) a,b,c	ON/OFF		ON/OFF		
	2) a,b,c	DIM UP		↑		
	3) a,b,c	DIM DOWN		↓		
	PLUG LOAD CONTROLS					
		L3B	4 C		TIMER & OVERRIDE VIA LIGHTING CONTROL SYSTEM	
302	**RENTAL**	H3A	1 a	WIRELESS CONTROLLER	WIRELESS SWITCH, OCC SENSOR AUTO ON 50%, PHOTOCELL	DAYLIGHT ZONE 1
			b	WIRELESS CONTROLLER	WIRELESS SWITCH, OCC SENSOR AUTO ON 50%,	GENERAL
3-BUTTON SWITCH:	*ZONE:*	*FUNCTION:*		*SWITCH LABEL:*		
	1) a,b	ON/OFF		ON/OFF		
	2) a,b	DIM UP		↑		
	3) a,b	DIM DOWN		↓		
302A	**OFFICE**	H3A	1 a	WIRELESS CONTROLLER	WIRELESS SWITCH, OCC SENSOR AUTO ON 50%	GENERAL LIGHTING
3-BUTTON SWITCH:	*ZONE:*	*FUNCTION:*		*SWITCH LABEL:*		
	1) a	ON/OFF		ON/OFF		
	2) a	DIM UP		↑		
	3) a	DIM DOWN		↓		
	PLUG LOAD CONTROLS					
		L3B	7b C		TIMER & OVERRIDE VIA LIGHTING CONTROL SYSTEM	
302B	**OFFICE**	H3A	1 a	WIRELESS CONTROLLER	WIRELESS SWITCH, OCC SENSOR AUTO ON 50%	GENERAL LIGHTING
3-BUTTON SWITCH:	*ZONE:*	*FUNCTION:*		*SWITCH LABEL:*		
	1) a	ON/OFF		ON/OFF		
	2) a	DIM UP		↑		
	3) a	DIM DOWN		↓		
	PLUG LOAD CONTROLS					
		L3B	9b C		TIMER & OVERRIDE VIA LIGHTING CONTROL SYSTEM	
302C	**OFFICE**	H3A	1 a	WIRELESS CONTROLLER	WIRELESS SWITCH, OCC SENSOR AUTO ON 50%	GENERAL LIGHTING
3-BUTTON SWITCH:	*ZONE:*	*FUNCTION:*		*SWITCH LABEL:*		
	1) a	ON/OFF		ON/OFF		
	2) a	DIM UP		↑		
	3) a	DIM DOWN		↓		
	PLUG LOAD CONTROLS					
		L3B	11b C		TIMER & OVERRIDE VIA LIGHTING CONTROL SYSTEM	
302D	**OFFICE**	H3A	1 a	WIRELESS CONTROLLER	WIRELESS SWITCH, OCC SENSOR AUTO ON 50%, PHOTOCELL	DAYLIGHT ZONE 1
3-BUTTON SWITCH:	*ZONE:*	*FUNCTION:*		*SWITCH LABEL:*		
	1) a	ON/OFF		ON/OFF		
	2) a	DIM UP		↑		
	3) a	DIM DOWN		↓		
	PLUG LOAD CONTROLS					
		L3B	17b C		TIMER & OVERRIDE VIA LIGHTING CONTROL SYSTEM	
303	**CAMP SCHECHTER**	H3A	3 a	WIRELESS CONTROLLER	WIRELESS SWITCH, OCC SENSOR AUTO ON 50%	GENERAL LIGHTING
3-BUTTON SWITCH:	*ZONE:*	*FUNCTION:*		*SWITCH LABEL:*		
	1) a	ON/OFF		ON/OFF		
	2) a	DIM UP		↑		
	3) a	DIM DOWN		↓		
303A	**CONF ROOM**	H3A	3 a	WIRELESS CONTROLLER	WIRELESS SWITCH, OCC SENSOR AUTO ON 50%	GENERAL LIGHTING
3-BUTTON SWITCH:	*ZONE:*	*FUNCTION:*		*SWITCH LABEL:*		
	1) a	ON/OFF		ON/OFF		
	2) a	DIM UP		↑		
	3) a	DIM DOWN		↓		
	PLUG LOAD CONTROLS					
		L3A	11b C		TIMER & OVERRIDE VIA LIGHTING CONTROL SYSTEM	
303B	**OFFICE/PHONE**	H3A	3 a	WIRELESS CONTROLLER	WIRELESS SWITCH, OCC SENSOR AUTO ON 50%	GENERAL LIGHTING
3-BUTTON SWITCH:	*ZONE:*	*FUNCTION:*		*SWITCH LABEL:*		
	1) a	ON/OFF		ON/OFF		
	2) a	DIM UP		↑		
	3) a	DIM DOWN		↓		
	PLUG LOAD CONTROLS					
		L3A	13b C		TIMER & OVERRIDE VIA LIGHTING CONTROL SYSTEM	

TFWB ENGINEERS INC
Travis Fitzmaurice Wartelle Balangue Engineers Inc.
1200 Westlake Ave. N., #509
Seattle, WA 98109
p: 206-285-7228 | info@tf-wb.com

3427 BEACON AVE S
SEATTLE 98144
ANJALI@AGRANITDESIGN.COM
206-512-4209

KEVIN E. WARTELLE — STATE OF WASHINGTON — 44109 — REGISTERED PROFESSIONAL ENGINEER

NO.	DATE	DESCRIPTION
	4 JUNE 2025	BUILDING PERMIT

PROJECT: 23-101

3700 E MERCER WAY
BARNABIE POINT PROJECT

LIGHTING CONTROL SCHEDULE

E-708

anjali grant design LLC

O:\CAD\ARKIT R.24 23-101\E-700.dwg
2025/06 7:23 PM

TFWB ENGINEERS PLLC
Travis Fitzmaurice Wartelle Balangue Engineers Inc.
1200 Westlake Ave. N., #509
Seattle, WA 98109
p: 206-285-7228 | info@tf-wb.com

3427 BEACON AVE S
SEATTLE 98144
ANJALI@AGRANTDESIGN.COM
206-512-4209

anjali grant design LLC

LIGHTING CONTROL SCHEDULE

CONTROLLER	ROOM	PANEL	CIRCUIT	INTERFACE	DEVICES	DESCRIPTION
303C	**COO**	H3A	3 a	WIRELESS CONTROLLER	WIRELESS SWITCH, OCC SENSOR AUTO ON 50%	GENERAL LIGHTING
3-BUTTON SWITCH:	*ZONE:*	*FUNCTION:*		*SWITCH LABEL:*		
	1) a	ON/OFF		ON/OFF		
	2) a	DIM UP		↑		
	3) a	DIM DOWN		↓		
	PLUG LOAD CONTROLS					
		L3A	15b C		TIMER & OVERRIDE VIA LIGHTING CONTROL SYSTEM	
303D	**DEV/COMM**	H3A	3 a	WIRELESS CONTROLLER	WIRELESS SWITCH, OCC SENSOR AUTO ON 50%, PHOTOCELL	DAYLIGHT ZONE 1
			b	WIRELESS CONTROLLER	WIRELESS SWITCH, OCC SENSOR AUTO ON 50%, PHOTOCELL	DAYLIGHT ZONE 2
3-BUTTON SWITCH:	*ZONE:*	*FUNCTION:*		*SWITCH LABEL:*		
	1) a,b	ON/OFF		ON/OFF		
	2) a,b	DIM UP		↑		
	3) a,b	DIM DOWN		↓		
	PLUG LOAD CONTROLS					
		L3A	17b C		TIMER & OVERRIDE VIA LIGHTING CONTROL SYSTEM	
303E	**PROGRAM OFFICE**	H3A	3 a	WIRELESS CONTROLLER	WIRELESS SWITCH, OCC SENSOR AUTO ON 50%, PHOTOCELL	DAYLIGHT ZONE 1
			b	WIRELESS CONTROLLER	WIRELESS SWITCH, OCC SENSOR AUTO ON 50%, PHOTOCELL	DAYLIGHT ZONE 2
3-BUTTON SWITCH:	*ZONE:*	*FUNCTION:*		*SWITCH LABEL:*		
	1) a,b	ON/OFF		ON/OFF		
	2) a,b	DIM UP		↑		
	3) a,b	DIM DOWN		↓		
	PLUG LOAD CONTROLS					
		L3A	5b C		TIMER & OVERRIDE VIA LIGHTING CONTROL SYSTEM	
303F	**PROGRAM OFFICE**	H3A	3 a	WIRELESS CONTROLLER	WIRELESS SWITCH, OCC SENSOR AUTO ON 50%, PHOTOCELL	DAYLIGHT ZONE 1
			b	WIRELESS CONTROLLER	WIRELESS SWITCH, OCC SENSOR AUTO ON 50%	GENERAL
3-BUTTON SWITCH:	*ZONE:*	*FUNCTION:*		*SWITCH LABEL:*		
	1) a,b	ON/OFF		ON/OFF		
	2) a,b	DIM UP		↑		
	3) a,b	DIM DOWN		↓		
	PLUG LOAD CONTROLS					
		L3A	3b C		TIMER & OVERRIDE VIA LIGHTING CONTROL SYSTEM	

EXTERIOR CONTROLS



3700 E MERCER WAY
BARNABIE POINT PROJECT

NO.	DATE	DESCRIPTION

4 JUNE 2025
BUILDING PERMIT

PROJECT: 23-101

LIGHTING CONTROL SCHEDULE

E-709

D:\CAD\ARIST 6.0_23-101E-720.dwg
7/2/2025 2:03 PM

MECHANICAL EQUIPMENT CONNECTION SCHEDULE

TAG	LOCATION	KW	HP	KVA	AMPS/FLA	MCA	MOCP/	VOLTAGE	PHASE	STARTER	BREAKER SIZE	CIRCUIT		CONDUIT/WIRE	NOTES
PLUMBING EQUIPMENT SCHEDULE															
SP-1	PLUMBING/STOR 007		2		18.1			208	1	DISCONNECT	25/2	L0M-1,3		3/4"-4#12	COORDINATE CONTROLLER LOCATION WITH MECH CONTROLS PRIOR TO ROUGH-IN
SP-2	PLUMBING/STOR 007		2		18.1			208	1	DISCONNECT	25/2	L0M-5,7		3/4"-4#12	COORDINATE CONTROLLER LOCATION WITH MECH CONTROLS PRIOR TO ROUGH-IN
ESP-1	ELEVATOR PIT				10.4			120	1	DISCONNECT	20/1	LEL-9		1/2"-3#12	COORDINATE CONTROLLER LOCATION WITH MECH CONTROLS PRIOR TO ROUGH-IN
HWCP-1	PLUMBING/STOR 007				2.3			120	1	DISCONNECT	20/1	L0M-11		1/2"-3#12	
HWH-1	PLUMBING/STOR 007				67			240	1	DISCONNECT	85/2	L0M-2,4		1.25"-3#4 - 1#8GND	
HWH-2	PLUMBING/STOR 007				67			240	1	DISCONNECT	85/2	L0M-6,8		1.25"-3#4 - 1#8GND	
TP-2	SPRINKLER				0.5			120	1	DISCONNECT	20/1	L0M-10		1/2"-3#12	
DF-1	EACH LEVEL							120	1						SEE FLOOR PLANS FOR CIRCUITRY. GFCI AT PANEL
BRANCH CONTROLLER SCHEDULE (VRF)															
BC-3-1	LEVEL 3					1.82	15	208	1	DISCONNECT	15/2	L3M-1,3		1/2"-3#12	CONNECTED TO CONDENSING UNIT RVRF-R-1
BC-2-1	LEVEL 2					1.82	15	208	1	DISCONNECT	15/2	L3M-5,7		1/2"-3#12	CONNECTED TO CONDENSING UNIT RVRF-R-1
BC-1-1	LEVEL 1					1.82	15	208	1	DISCONNECT	15/2	L0M-16,18		1/2"-3#12	CONNECTED TO CONDENSING UNIT RVRF-R-1
BC-B-1	LEVEL B					0.87	15	208	1	DISCONNECT	15/2	L0M-12,14		1/2"-3#12	CONNECTED TO CONDENSING UNIT RVRF-R-1
VRF FAN COIL SCHEDULE															
VFC-B-1	CONFERENCE 006				0.31	0.39		208	1	DISCONNECT	20/2	L0M-13,15		1/2"4#12	SHARED CIRCUIT WITH UNITS LISTED BELOW
VFC-B-2	WORKROOM 005				0.43	0.54		208	1	DISCONNECT		L0M-13,15		1/2"4#12	
VFC-B-3	FACULTY 004				0.31	0.39		208	1	DISCONNECT		L0M-13,15		1/2"4#12	
VFC-B-4	ART 003				0.43	0.54		208	1	DISCONNECT		L0M-13,15		1/2"4#12	
VFC-B-5A	STEM / SCIENCE 02				0.43	0.54		208	1	DISCONNECT		L0M-13,15		1/2"4#12	
VFC-B-5B	STEM / SCIENCE 02				0.43	0.54		208	1	DISCONNECT		L0M-13,15		1/2"4#12	
VFC-6	CIRC 001				1.7	2.13		208	1	DISCONNECT		L0M-13,15		1/2"4#12	
VFC-1-1	LRC-1 119				0.2	0.24		208	1	DISCONNECT	20/2	L0M-17,19		1/2"4#12	SHARED CIRCUIT WITH UNITS LISTED BELOW
VFC-1-2A	PRESCHOOL 118				0.43	0.54		208	1	DISCONNECT		L0M-17,19		1/2"4#12	
VFC-1-2B	PRESCHOOL 118				0.31	0.39		208	1	DISCONNECT		L0M-17,19		1/2"4#12	
VFC-1-3	PRESCHOOL 117				0.45	0.57		208	1	DISCONNECT		L0M-17,19		1/2"4#12	
VFC-1-4	CLASSROOM 116				0.43	0.54		208	1	DISCONNECT		L0M-17,19		1/2"4#12	
VFC-1-5	CLASSROOM 115				0.43	0.54		208	1	DISCONNECT		L0M-17,19		1/2"4#12	
VFC-1-6	OFFICES 114B/C/D				1.4	1.75		208	1	DISCONNECT		L0M-17,19		1/2"4#12	
VFC-1-7	CLASSROOM 113				0.43	0.54		208	1	DISCONNECT		L0M-17,19		1/2"4#12	
VFC-1-8	KITHCEN 102				0.43	0.54		208	1	DISCONNECT	20/2	L0M-21,23		1/2"4#12	SHARED CIRCUIT WITH UNITS LISTED BELOW
VFC-1-9	OFFICE 112				0.19	0.24		208	1	DISCONNECT		L0M-21,23		1/2"4#12	
VFC-1-10	CIRC 111				2.3	2.88		208	1	DISCONNECT		L0M-21,23		1/2"4#12	
VFC-1-11	ADMIN 114 / OFFICE 114A				1.4	1.75		208	1	DISCONNECT		L0M-21,23		1/2"4#12	
VFC-1-12	OFFFICE 112				0.31	0.39		208	1	DISCONNECT		L0M-21,23		1/2"4#12	
VFC-2-1	CLASSROOM 207				0.45	0.57		208	1	DISCONNECT	20/2	L3M-2,4		1/2"4#12	SHARED CIRCUIT WITH UNITS LISTED BELOW
VFC-2-2	CLASSROOM 206				0.45	0.57		208	1	DISCONNECT		L3M-2,4		1/2"4#12	
VFC-2-3	BREAKOUT 200A				0.43	0.54		208	1	DISCONNECT		L3M-2,4		1/2"4#12	
VFC-2-4	LRC-2 205				0.2	0.24		208	1	DISCONNECT		L3M-2,4		1/2"4#12	
VFC-2-5	CLASSROOM 204				0.43	0.54		208	1	DISCONNECT		L3M-2,4		1/2"4#12	
VFC-2-6	CLASSROOM 203				0.43	0.54		208	1	DISCONNECT		L3M-2,4		1/2"4#12	
VFC-2-7	CLASSROOM 202				0.43	0.54		208	1	DISCONNECT		L3M-2,4		1/2"4#12	
VFC-2-8	BREAK ROOM 211A				0.43	0.54		208	1	DISCONNECT	20/2	L3M-6,8		1/2"4#12	SHARED CIRCUIT WITH UNITS LISTED BELOW
VFC-2-9	CIRC 200				1.7	2.13		208	1	DISCONNECT		L3M-6,8		1/2"4#12	
VFC-2-10	RENTAL 213				0.43	0.54		208	1	DISCONNECT		L3M-6,8		1/2"4#12	
VFC-2-11	RENTAL 212				0.31	0.39		208	1	DISCONNECT		L3M-6,8		1/2"4#12	
VFC-2-12	OFFICE 212B				0.19	0.24		208	1	DISCONNECT		L3M-6,8		1/2"4#12	
VFC-2-13	CONFERENCE RM 212A				0.19	0.24		208	1	DISCONNECT		L3M-6,8		1/2"4#12	
VFC-2-14	CONFERENCE RM 213A				0.31	0.39		208	1	DISCONNECT		L3M-6,8		1/2"4#12	
VFC-2-15	WORK ROOM 213B				0.19	0.24		208	1	DISCONNECT		L3M-6,8		1/2"4#12	
VFC-2-16	OFFICE 213C				0.19	0.24		208	1	DISCONNECT		L3M-6,8		1/2"4#12	
VFC-3-1	COO/OFFICE				1.7	2.13		208	1	DISCONNECT	20/2	L3M-10,12		1/2"4#12	SHARED CIRCUIT WITH UNITS LISTED BELOW
VFC-3-2	DEV/COMM 303D				0.31	0.39		208	1	DISCONNECT		L3M-10,12		1/2"4#12	
VFC-3-3	PROGRAM OFFICE				0.31	0.39		208	1	DISCONNECT		L3M-10,12		1/2"4#12	
VFC-3-4	EXEC OFFICE 303F				0.19	0.24		208	1	DISCONNECT		L3M-10,12		1/2"4#12	
VFC-3-5	CAMP SCHECHTER 303				0.19	0.24		208	1	DISCONNECT		L3M-10,12		1/2"4#12	
VFC-3-6	RENTAL OFFICE 300F				0.19	0.24		208	1	DISCONNECT		L3M-10,12		1/2"4#12	
VFC-3-7A	RENTAL 302				0.31	0.39		208	1	DISCONNECT		L3M-10,12		1/2"4#12	
VFC-3-7B	RENTAL 302				0.31	0.39		208	1	DISCONNECT		L3M-10,12		1/2"4#12	
VFC-3-8	OFFICE 302B/C				1.4	1.75		208	1	DISCONNECT	20/2	L3M-14,16		1/2"4#12	SHARED CIRCUIT WITH UNITS LISTED BELOW
VFC-3-9	GAM/TECH 301G				0.43	0.54		208	1	DISCONNECT		L3M-14,16		1/2"4#12	
VFC-3-10	MUSIC 301F				0.31	0.39		208	1	DISCONNECT		L3M-14,16		1/2"4#12	
VFC-3-11	ART/STEM/OPEN OFFICE				1.01	1.27		208	1	DISCONNECT		L3M-14,16		1/2"4#12	
VFC-3-12	SNOEZELEN ROOM 301E				0.31	0.39		208	1	DISCONNECT		L3M-14,16		1/2"4#12	
VFC-3-13	OFFICES				1.7	2.13		208	1	DISCONNECT		L3M-14,16		1/2"4#12	
VFC-3-14A	CIRC 300				0.21	0.26		208	1	DISCONNECT		L3M-14,16		1/2"4#12	
VFC-3-14B	CIRC 300				0.21	0.26		208	1	DISCONNECT		L3M-14,16		1/2"4#12	
VFC-3-15	CONFERERENCE 303A				0.31	0.39		208	1	DISCONNECT		L3M-14,16		1/2"4#12	
VFC-3-16	OPEN OFFICE				0.31	0.39		208	1	DISCONNECT		L3M-14,16		1/2"4#12	
VHP-C-1	CHAPEL					8.2		208	1	DISCONNECT	15/2	L3M-18,20		1/2"4#12	DEDICATED CIRCUIT
VRF CONDENSING UNIT SCHEDUL (AIR-COOLED - MULTI-SPLIT SYSTEM)															
VRF-R-1	ROOF					60/60	100/100	208	3	WP DISCONNECT	100/3	L3M-9,11,13			
VRF-R-2	ROOF					88	150	208	3	WP DISCONNECT	150/3	L3M-15,17,19		1.5"4#1/0, 1#6GND	
VRF-R-3	ROOF					88	150	208	3	WP DISCONNECT	150/3	L3M-21,23,25		1.5"4#1/0, 1#6GND	
VRF-4-4	ROOF					32	58	208	3	WP DISCONNECT	60/3	L3M-27,29,31		1"4#6, 1#10GND	
ENERGY RECOVERY VENTILATOR SCHEDULE															
ERV-B-1	BASEMENT LEVEL				9.1			230	1	FUSED DISCONNECT SWITCH	15/2	L0M-25,27		1/2"4#12	
ERV-B-2	BASEMENT LEVEL				9.1			230	1	FUSED DISCONNECT SWITCH	15/2	L0M-29,31		1/2"4#12	
ERV-C-1	LEVEL 2 MECH MEZZ				9.1			230	1	FUSED DISCONNECT SWITCH	15/2	L3M-22,24		1/2"4#12	
ERV-1-1	LEVEL 1				5.6			230	1	FUSED DISCONNECT SWITCH	15/2	L0M-33,35		1/2"4#12	
ERV-1-2	LEVEL 1				5.6			230	1	FUSED DISCONNECT SWITCH	15/2	L0M-37,39		1/2"4#12	
ERV-1-3	LEVEL 1				5.6			230	1	FUSED DISCONNECT SWITCH	15/2	L0M-20,22		1/2"4#12	
ERV-2-1	LEVEL 2				6.1	5.2	15	208	1	FUSED DISCONNECT SWITCH	15/2	L3M-26,28		1/2"4#12	
ERV-2-2	LEVEL 2				6.1	5.2	15	208	1	FUSED DISCONNECT SWITCH	15/2	L3M-30,32		1/2"4#12	
ERV-2-3	LEVEL 2				6.1	5.2	15	208	1	FUSED DISCONNECT SWITCH	15/2	L3M-34,36		1/2"4#12	
ERV-2-4	LEVEL 2				5.6			230	1	FUSED DISCONNECT SWITCH	15/2	L3M-38,40		1/2"4#12	
ERV-2-5	LEVEL 2				5.6			230	1	FUSED DISCONNECT SWITCH	15/2	L3M-42,44		1/2"4#12	
ERV-R-1	ROOF				5.8	6.5	9	230	1	FUSED DISCONNECT SWITCH	15/2	L3M-46,48		1/2"4#12	

TFWB ENGINEERS INC
Travis Fitzmaurice Wartelle Balangue Engineers Inc.
1200 Westlake Ave. N., #509
Seattle, WA 98109
p: 206-285-7228 | info@tf-wb.com

3427 BEACON AVE S
SEATTLE 98144
ANJALI@AGRANTIDESIGN.COM
206-512-4209

KEVIN E. WARTELLE — STATE OF WASHINGTON — 44109 — REGISTERED PROFESSIONAL ENGINEER

3700 E MERCER WAY
BARNABIE POINT PROJECT

NO.	DATE	DESCRIPTION
	4 JUNE 2025	BUILDING PERMIT

PROJECT: 23-101

MECHANICAL SCHEDULE

E-800

C:\CAD\Revit R24 23-101E-800.dwg
2025/06/04 2:09 PM

TFWB ENGINEERS INC
Travis Fitzmaurice Wartelle
Balangue Engineers Inc.
1200 Westlake Ave. N., #509
Seattle, WA 98109
p: 206-285-7228 | info@tf-wb.com

3427 BEACON AVE S
SEATTLE 98144
ANJALI@AGRANTIDESIGN.COM
206-512-4209

anjali grant design LLC

MECHANICAL EQUIPMENT CONNECTION SCHEDULE

TAG	LOCATION	KW	HP	KVA	AMPS/FLA	MCA	MOCP/	VOLTAGE	PHASE	STARTER	BREAKER SIZE	CIRCUIT		CONDUIT/WIRE	NOTES
DUCTLESS SPLIT SYSTEM SCHEDULE (COOLING ONLY OR HEAT PUMP)															
DXFC-B-1	SERVING MDF					19	26	208	1	FUSED DISCONNECT	30/2	L0M-24,26		1/2"-4#10	
DXFC-2-1	SERVING L2 IDF					19	26	208	1	FUSED DISCONNECT	30/2	L0M-28,30		1/2"-4#10	
ROOF CONSTAN VOLUME HEAT PUMP SCHEDULE															
RTU-R-1	ROOF		3			97		208	3	WP DISCONNECT	100/3	L3M-33,35,37		1.25"-4#4, 1#8GND	
RTU-R-2	ROOF		1			66		208	3	WP DISCONNECT	70/3	L3M-39,41,43		1.25"-4#4, 1#8GND	
FAN SCHEDULE															
EF-B-1	ELECTRICAL RM 002B		3/4					208	1	DISCONNECT	20/2	L0M-32,34		1/2"-4#12	
EF-B-2	KILN ROOM		1/3					115	1	DISCONNECT	20/1	L0M-36		1/2"-3#12	PULL FROM 120 VOLT CCT
EF-R-1	ROOF		1/4					115	1	WP DISCONNECT	20/1	L3M-50		1/2"-3#12	PULL FROM 120 VOLT CCT
FAN HEATER SCHEDULE															
FH-B-1	LEVEL 1	6						208	3	WP DISCONNECT	20/3	L0M-43,45,47		1/2"-5#12	
ELECTRIC CABINET HEATER SCHEDULE (PROVIDED BY E.C.)															
ECH-1-1	JDS STAIR	2.25			10.8			208	1	DISCONNECT	15/2	L0M-38,40		1/2"4#12	
ECH-1-2	VEST 110	1			12.5			120	1	DISCONNECT	20/1	L0M-42		1/2"3#12	
ECH-1-3	VEST 106	1			12.5			120	1	DISCONNECT	20/1	L0M-44		1/2"3#12	
ECH-1-4	SE STAIR	1			12.5			120	1	DISCONNECT	20/1	L0M-46		1/2"3#12	
ECH-1-5	VEST 100	2.25			10.8			208	1	DISCONNECT	15/2	L0M-48,50		1/2"4#12	

KEVIN E. WARTELLE
STATE OF WASHINGTON
44109
REGISTERED
PROFESSIONAL ENGINEER

3700 E MERCER WAY
BARNABIE POINT PROJECT

NO. DATE DESCRIPTION

4 JUNE 2025
BUILDING PERMIT

PROJECT: 23-101

MECHANICAL SCHEDULE

E-801

D:\CAD\ARKY Kvk 23-101\E-800.dwg
2025-06-04 2:29 PM

SWITCHBOARD HI — VOLTS 480 /277 — 3 PHASE, 4 WIRE, WYE
LOCATION MAIN EL ROOM — AMPS 1200
MOUNTING SURFACE — MCB GFPE
AIC 65,000 — GROUND BUS
FED FROM UTILITY — UL SERVICE LABEL
INTERNAL UTILITY METERING — PROVIDE SURGE PROTECTOR

CCT NO.	CCT BRKR	DESCRIPTION	LOAD KVA	CCT NO.	CCT BRKR	DESCRIPTION	LOAD KVA
1	100/3	PANEL HOA	7.90	2	400/3	PANELS LOM & L3M	240.93
3	50/3	PANEL H1A	10.80	4	50/3	PANEL H3A	4.70
5	50/3	PANEL H2A	6.70	6	(100/3)	PROVISIONED SPACE	0.00
	(100/3)	PROVISIONED SPACE	0.00	8	450/3	DISTRIBUTION L1	175.50
	100/3*	PV INTERCONNECTION		10	90/3	ELEVATOR	0.00
	(250/3)	PROVISIONED SPACE		12	20/3	METER POWER	0.00
	(250/3)	PROVISIONED SPACE		14	70/3	TVSS	0.00
	(100/3)	PROVISIONED SPACE		16	(100/3)	PROVISIONED SPACE	0.00

*PROVIDE WITH GFPE BREAKER

CONNECTED LOAD KVA		DEMAND FACTOR	DEMAND LOAD KVA	AMPS
LIGHTS	30.30	125%	37.88	45.56
RECEPTACLES	122.50	100%	122.50	147.34
HEATING	37.50	100%	37.50	45.11
LARGEST MOTOR	34.92	125%	43.65	52.50
OTHER MOTORS	154.18	100%	154.18	185.45
MISCELLANEOUS	61.43	100%	61.43	73.89
KITCH. APPLIANCES	5.70	100%	5.70	6.86
	446.53		462.84	556.70

PANEL HOA — VOLTS 480 /277 — 3 PHASE, 4 WIRE, WYE
LOCATION — AMPS 100
MOUNTING SURFACE — MCB 100
AIC 22,000 — GROUND BUS
FED FROM SWBD HI

CCT NO.	CCT BRKR	DESCRIPTION	LOAD KVA	CCT NO.	CCT BRKR	DESCRIPTION	LOAD KVA
1	20/1	BASEMENT LIGHTS	2.50	2	20/1	STAIR LIGHTS	0.80
3	20/1	BASEMENT LIGHTS	1.70	4	20/1	EXTERIOR BUILDING LITS	0.50
5	20/1	BASEMENT LIGHTS	0.80	6	20/1	SITE LIGHTING	1.60
7	20/1	SPARE	0.00	8	20/1	SPARE	0.00
9	20/1	SPARE	0.00	10	20/1	SPARE	0.00
11	20/1	SPARE	0.00	12		SPACE	
13	20/1	SPARE	0.00	14		SPACE	
15		SPACE	0.00	16		SPACE	
17		SPACE	0.00	18		SPACE	
19		SPACE	0.00	20		SPACE	
21		SPACE		22		SPACE	
23		SPACE		24		SPACE	
25		SPACE		26		SPACE	
27		SPACE		28		SPACE	
29		SPACE		30		SPACE	
31		SPACE		32		SPACE	
33		SPACE		34		SPACE	
35		SPACE		36		SPACE	
37		SPACE		38	30/3	TVSS	0.00
39		SPACE		40			
41		SPACE		42			

CONNECTED LOAD KVA		DEMAND FACTOR	DEMAND LOAD KVA	AMPS
LIGHTS	7.90	125%	9.88	11.88
RECEPTACLES	0.00	100%	0.00	0.00
HEATING	0.00	100%	0.00	0.00
LARGEST MOTOR	0.00	125%	0.00	0.00
OTHER MOTORS	0.00	100%	0.00	0.00
MISCELLANEOUS	0.00	100%	0.00	0.00
KITCH. APPLIANCES	0.00	65%	0.00	0.00
	7.90		9.88	11.88

PANEL HIA — VOLTS 480 /277 — 3 PHASE, 4 WIRE, WYE
LOCATION — AMPS 50
MOUNTING SURFACE — MLO
AIC 14,000 — GROUND BUS
FED FROM SWBD HI — PROVIDE SURGE PROTECTOR

CCT NO.	CCT BRKR	DESCRIPTION	LOAD KVA	CCT NO.	CCT BRKR	DESCRIPTION	LOAD KVA
1	20/1	FIRST FLOOR LIGHTS WES	2.40	2	20/1	CHAPEL LIGHTING EAST	1.60
3	20/1	FIRST FLOOR LIGHTS WES	1.40	4	20/1	GYM LIGHTING EAST	2.70
5	20/1	FIRST FLOOR LIGHTS WES	1.60	6	20/1	MISC LIGHTING EAST	0.60
7	20/1	FIRST FLOOR LIGHTS WES	0.50	8	20/1	SPARE	0.00
9		SPACE		10	20/1	SPARE	0.00
11		SPACE		12	20/1	SPARE	0.00
13		SPACE		14	20/1	SPARE	0.00
15		SPACE		16		SPACE	
17		SPACE		18		SPACE	
19		SPACE		20		SPACE	
21		SPACE		22		SPACE	
23		SPACE		24		SPACE	
25		SPACE		26	30/3	TVSS	0.00
27		SPACE		28			
29		SPACE		30			

CONNECTED LOAD KVA		DEMAND FACTOR	DEMAND LOAD KVA	AMPS
LIGHTS	10.80	125%	13.50	16.24
RECEPTACLES	0.00	100%	0.00	0.00
HEATING	0.00	100%	0.00	0.00
LARGEST MOTOR	0.00	125%	0.00	0.00
OTHER MOTORS	0.00	100%	0.00	0.00
MISCELLANEOUS	0.00	100%	0.00	0.00
KITCH. APPLIANCES	0.00	65%	0.00	0.00
	10.80		13.50	16.24

PANEL H2A — VOLTS 480 /277 — 3 PHASE, 4 WIRE, WYE
LOCATION — AMPS 50
MOUNTING SURFACE — MLO
AIC 14,000 — GROUND BUS
FED FROM SWBD HI — PROVIDE SURGE PROTECTOR

CCT NO.	CCT BRKR	DESCRIPTION	LOAD KVA	CCT NO.	CCT BRKR	DESCRIPTION	LOAD KVA
1	20/1	SEC FLOOR LIGHTING WES	0.90	2	20/1	SPARE	0.00
3	20/1	SEC FLOOR LIGHTING WES	2.40	4	20/1	SPARE	0.00
5	20/1	SEC FLOOR LIGHTING WES	1.40	6	20/1	SPARE	0.00
7	20/1	SEC FLOOR LIGHTING EAS	0.70	8	20/1	SPARE	0.00
9	20/1	SEC FLOOR LIGHTING EAST		10		SPACE	0.00
11		SPACE		12		SPACE	0.00
13		SPACE		14		SPACE	0.00
15		SPACE		16		SPACE	
17		SPACE		18		SPACE	
19		SPACE		20		SPACE	
21		SPACE		22		SPACE	
23		SPACE		24		SPACE	
25		SPACE		26	30/3	TVSS	0.00
27		SPACE		28			
29		SPACE		30			

CONNECTED LOAD KVA		DEMAND FACTOR	DEMAND LOAD KVA	AMPS
LIGHTS	6.70	125%	8.38	10.07
RECEPTACLES	0.00	100%	0.00	0.00
HEATING	0.00	100%	0.00	0.00
LARGEST MOTOR	0.00	125%	0.00	0.00
OTHER MOTORS	0.00	100%	0.00	0.00
MISCELLANEOUS	0.00	100%	0.00	0.00
KITCH. APPLIANCES	0.00	65%	0.00	0.00
	6.70		8.38	10.07

PANEL H3A — VOLTS 480 /277 — 3 PHASE, 4 WIRE, WYE
LOCATION — AMPS 50
MOUNTING SURFACE — MLO
AIC 14,000 — GROUND BUS
FED FROM SWBD HI — PROVIDE SURGE PROTECTOR

CCT NO.	CCT BRKR	DESCRIPTION	LOAD KVA	CCT NO.	CCT BRKR	DESCRIPTION	LOAD KVA
1	20/1	THIRD FL LIT UNIT 1	1.30	2	20/1	SPARE	0.00
3	20/1	THIRD FL LIT UNIT 2	1.20	4	20/1	SPARE	0.00
5	20/1	THIRD FL LIT UNIT 3	2.20	6	20/1	SPARE	0.00
7	20/1	SPARE	0.00	8		SPACE	0.00
9	20/1	SPARE		10		SPACE	0.00
11	20/1	SPARE		12		SPACE	0.00
13		SPACE		14		SPACE	0.00
15		SPACE		16		SPACE	
17		SPACE		18		SPACE	
19		SPACE		20		SPACE	
21		SPACE		22		SPACE	
23		SPACE		24		SPACE	
25		SPACE		26	30/3	TVSS	0.00
27		SPACE		28			
29		SPACE		30			

CONNECTED LOAD KVA		DEMAND FACTOR	DEMAND LOAD KVA	AMPS
LIGHTS	4.70	125%	5.88	7.07
RECEPTACLES	0.00	100%	0.00	0.00
HEATING	0.00	100%	0.00	0.00
LARGEST MOTOR	0.00	125%	0.00	0.00
OTHER MOTORS	0.00	100%	0.00	0.00
MISCELLANEOUS	0.00	100%	0.00	0.00
KITCH. APPLIANCES	0.00	65%	0.00	0.00
	4.70		5.88	7.07

DISTRIBUTION L1 — VOLTS 208 /120 — 3 PHASE, 4 WIRE, WYE
LOCATION MAIN EL ROOM — AMPS 1000
MOUNTING SURFACE — MCB
AIC 65,000 — GROUND BUS
FED FROM MAIN SWBD — PROVIDE SURGE PROTECTOR

CCT NO.	CCT BRKR	DESCRIPTION	LOAD KVA	CCT NO.	CCT BRKR	DESCRIPTION	LOAD KVA
1	225/3	PANEL LOA	52.00	2	150/3	SPARE	0.00
3	300/3	SPARE	0.00	4	150/3	SPARE	0.00
5	150/3	PANEL L1A	19.30	6	100/3	PANEL L1B	6.90
	150/3	PANEL L2A	22.30	8	100/3	PANEL L2B	6.84
	100/3	PANEL L3A	12.50	10	150/3	PANEL L3B	21.82
	300/3	PANEL EV	33.28	12	50/3	PANEL LEL	0.56
	(250/3)	PROVISIONED SPACE	0.00	14	20/3	METER POWER	0.00
	(250/3)	PROVISIONED SPACE		16	70/3	TVSS	0.00

CONNECTED LOAD KVA		DEMAND FACTOR	DEMAND LOAD KVA	AMPS
LIGHTS	0.20	125%	0.25	0.69
RECEPTACLES	122.50	100%	122.50	340.03
HEATING	0.00	100%	0.00	0.00
LARGEST MOTOR	0.00	125%	0.00	0.00
OTHER MOTORS	0.00	100%	0.00	0.00
MISCELLANEOUS	47.10	100%	47.10	130.74
KITCH. APPLIANCES	5.70	100%	5.70	15.82
	175.50		175.55	487.28

PANEL L0A — VOLTS 208 /120 — 3 PHASE, 4 WIRE, WYE
LOCATION — AMPS 225
MOUNTING SURFACE — MCB 225
AIC 10,000 — GROUND BUS
FED FROM DIST. L1

CCT NO.	CCT BRKR	DESCRIPTION	LOAD KVA	CCT NO.	CCT BRKR	DESCRIPTION	LOAD KVA
1	20/1	RECEPTS STEM/SCIENCE	0.72	2	20/1	RECEPTS FACULTY	0.72
3	20/1	RECEPTS STEM/SCIENCE	0.72	4	20/1	RECEPTS FACULTY	0.54
5	20/1	RECEPTS STEM/SCIENCE	0.72	6	20/1	C-RECEPTS FACULTY	1.08
7	20/1	RECEPTS STEM/SCIENCE	0.72	8	20/1	RECEPTS CONF.	0.72
9	20/1	RECEPTS STEM/SCIENCE	0.72	10	20/1	RECEPTS CONF.	0.36
11	20/1	RECEPTS STEM/SCIENCE	0.72	12	20/1	RECEPTS STORAGE	1.26
13	20/1	RECEPTS STEM/SCIENCE	0.72	14	20/1	COPIER WORKROOM	1.00
15	20/1	RECEPTS STEM/SCIENCE	0.72	16	20/1	COPIER WORKROOM	1.00
17	20/1	RECEPTS STEM/SCIENCE	1.08	18	20/1	C-RECEPTS WORKROOM	0.54
19	20/1	RECEPTS ART	0.54	20	20/1	RECEPTS WORKROOM	0.54
21	20/1	RECEPTS ART	0.54	22	20/1	MICROWAVE WORKROOM	1.20
23	20/1	RECEPTS ART	0.90	24	20/1	MICROWAVE WORKROOM	1.20
25	20/1	RECEPTS CIRC	0.90	26	20/1	MICROWAVE WORKROOM	1.20
27	20/1	DRINKING FOUNTAIN	0.30	28	20/1	C-RECEPTS WORKROOM	0.54
29	20/1	RECEPTS BACK OF HOUSE	1.06	30	30/2	COPIER	3.00
31	20/1	RECEPTS ELEC ROOM	0.72	32			0.00
33	40/3	KILN	10.00	34	30/2	DRYER	5.00
35			0.00	36			0.00
37			0.00	38	20/1	WASHER	1.00
39	20/1	RECEPTS MDF	0.36	40	30/2	DRYER	5.00
41	20/1	RECEPTS MDF	0.36	42			0.00
43	20/1	RECEPTS MDF	0.36	44	20/1	WASHER	1.00
45	20/1	RECEPTS MDF	0.36	46		SPACE	0.00
47	20/1	RECEPTS MDF	0.36	48		SPACE	0.00
49	30/2	UPS MDF	1.50	50		SPACE	0.00
51			0.00	52		SPACE	0.00
53	20/1	SPARE	0.00	54		SPACE	0.00
55	20/1	SPARE	0.00	56	30/3	TVSS	0.00
57	20/1	SPARE	0.00	58			0.00
59	20/1	SPARE	0.00	60			0.00
							0.00

CONNECTED LOAD KVA		DEMAND FACTOR	DEMAND LOAD KVA	AMPS
LIGHTS	0.00	125%	0.00	0.00
RECEPTACLES	42.00	100%	42.00	116.58
HEATING	0.00	100%	0.00	0.00
LARGEST MOTOR	0.00	125%	0.00	0.00
OTHER MOTORS	0.00	100%	0.00	0.00
MISCELLANEOUS	10.00	100%	10.00	27.76
KITCH. APPLIANCES	0.00	65%	0.00	0.00
	52.00		52.00	144.34

PANEL LOM — VOLTS 208 /120 — 3 PHASE, 4 WIRE, WYE
LOCATION — AMPS 400
MOUNTING SURFACE — MCB 400
AIC 22,000 — GROUND BUS
FED FROM HOM

CCT NO.	CCT BRKR	DESCRIPTION	LOAD KVA	CCT NO.	CCT BRKR	DESCRIPTION	LOAD KVA
1	25/2	SP-01	13.80	2	85/2	HWH-1	12.00
3				4			
5	25/2	SP-02	13.80	6	85/2	HWH-2	12.00
7				8			
9	20/1	ESP-1	1.20	10	20/1	TRAP PRIMER	0.18
11	20/1	HWCP-1	0.27	12	15/2	BC-B-1	0.10
13	20/2	VFC-B-1 THRU -6	0.60	14			
15				16	15/2	BC-1-1	0.10
17	20/2	VFC-1-1 THRU 1-7	0.61	18			
19				20	15/2	ERV-1-3	0.67
21	20/2	VFC-1-8 THRU 1-12	0.63	22			
23				24	30/2	DXFC-B-1	2.28
25	15/2	ERV-B-1	1.09	26			
27				28	30/2	DXFC-2-1	2.28
29	15/2	ERV-B-2	1.09	30			
31				32	20/2	EF-B-1	0.00
33	15/2	ERV-1-1	0.67	34			0.00
35				36	20/1	EF-B-2	0.00
37	15/2	ERV-1-2	0.67	38	15/2	ECH-1-1	2.25
39				40			
41	20/3	FH-B-1	6.00	42	20/1	ECH-1-2	1.00
43			0.00	44	20/1	ECH-1-3	1.00
45			0.00	46	20/1	ECH-1-4	1.00
47	20/2	SPARE	0.00	48	15/2	ECH-1-5	2.25
49			0.00	50			0.00
51			0.00	52		SPACE	0.00
53		SPACE	0.00	54		SPACE	0.00
55		SPACE	0.00	56	30/3		0.00
57		SPACE	0.00	58			0.00
59		SPACE	0.00	60			0.00

CONNECTED LOAD KVA		DEMAND FACTOR	DEMAND LOAD KVA	AMPS
LIGHTS	0.00	125%	0.00	0.00
RECEPTACLES	0.00	100%	0.00	0.00
HEATING	37.50	100%	37.50	104.09
LARGEST MOTOR	0.00	125%	0.00	0.00
OTHER MOTORS	31.11	100%	31.11	86.35
MISCELLANEOUS	8.93	100%	8.93	24.79
KITCH. APPLIANCES	0.00	65%	0.00	0.00
	77.54		77.54	215.23

TFWB ENGINEERS PLLC
Travis Fitzmaurice Wartelle Balangue Engineers Inc.
1200 Westlake Ave. N., #509
Seattle, WA 98109
p: 206-285-7228 | info@tf-wb.com

3427 BEACON AVE S
SEATTLE 98144
ANJALI@AGRANTIDESIGN.COM
206-512-4209

anjali grant design LLC

KEVIN E. WARTELLE — STATE OF WASHINGTON — 44109 — REGISTERED PROFESSIONAL ENGINEER

3700 E MERCER WAY
BARNABIE POINT PROJECT

NO.	DATE	DESCRIPTION
	4 JUNE 2025	BUILDING PERMIT

PROJECT: 23-101

PANEL SCHEDULES

E-802

O:\CAD\23101 Fall 23-101E-800.dwg
2025/05/21 3:49:57 PM

PANEL L1A — VOLTS 208 /120 — 3 PHASE, 4 WIRE, WYE
LOCATION — AMPS 150
MOUNTING SURFACE — MLO
AIC 10,000 — GROUND BUS
FED FROM DIST. L1

CCT NO.	CCT BRKR	DESCRIPTION	LOAD KVA	CCT NO.	CCT BRKR	DESCRIPTION	LOAD KVA
1	20/1	RECEPTS PRE S 118	0.54	2	20/1	RECEPTS ADMIN 114	0.36
3	20/1	RECEPTS PRE S 118	0.54	4	20/1	COPIER ADMIN 114	1.00
5	20/1	C-RECEPTS PRE S 118	1.26	6	20/1	C-RECEPTS ADMIN 114	0.54
7	20/1	RECEPTS LRC 119	0.90	8	20/1	RECEPTS OFFICE 114D	0.72
9	20/1	RECEPTS PRE S 117	0.90	10	20/1	RECEPTS OFFICE 114C	0.72
11	20/1	C-RECEPTS PRE S 117	0.90	12		RECEPTS OFFICE 114B	
13	20/1	RECEPTS CLASS 116	0.54	14		RECEPTS OFFICE 114A	
15	20/1	RECEPTS CLASS 116	0.54	16		RECEPTS CIRC 111	
17	20/1	C-RECEPTS CLASS 116	0.90	18		DRINKING FOUNTAIN	
19	20/1	RECEPTS CLASS 115	0.54	20		RECEPTS MISC	
21	20/1	RECEPTS CLASS 115		22		RECEPT OFFICE 112	
23	20/1	C-RECEPTS CLASS 115		24		RECEPTS OFFICE 107	
25	20/1	RECEPTS CLASS 113		26	20/1	SPARE	
27	20/1	RECEPTS CLASS 113		28	20/1	SPARE	
29	20/1	C-RECEPTS CLASS 113		30	20/1	SPARE	
31	20/1	SPARE		32		SPACE	
33	20/1	SPARE		34		SPACE	
35	20/1	SPARE		36		SPACE	
37		SPACE		38	30/3	TVSS	0.00
39		SPACE		40			
41		SPACE		42			

CONNECTED LOAD	KVA	DEMAND FACTOR	DEMAND LOAD KVA	AMPS
LIGHTS	0.00	125%	0.00	0.00
RECEPTACLES	19.30	100%	19.30	53.57
HEATING	0.00	100%	0.00	0.00
LARGEST MOTOR	0.00	125%	0.00	0.00
OTHER MOTORS	0.00	100%	0.00	0.00
MISCELLANEOUS	0.00	100%	0.00	0.00
KITCH. APPLIANCES	0.00	65%	0.00	0.00
	19.30		19.30	53.57

PANEL L1B — VOLTS 208 /120 — 3 PHASE, 4 WIRE, WYE
LOCATION — AMPS 100
MOUNTING SURFACE — MLO
AIC 10,000 — GROUND BUS
FED FROM DIST. L1

CCT NO.	CCT BRKR	DESCRIPTION	LOAD KVA	CCT NO.	CCT BRKR	DESCRIPTION	LOAD KVA
1	20/1	RECEPTS LOBBY 101	1.08	2	20/1	SPARE	0.00
3	20/1	RECEPTS GYM 103B	0.72	4	20/1	SPARE	0.00
5	20/1	RECEPTS GYM 103B	0.54	6	20/1	SPARE	0.00
7	20/1	RECEPTS CHAPEL 103A	0.90	8	20/1	SPARE	0.00
9	20/1	RECEPTS CHAPEL 103A	1.08	10	20/1	SPARE	0.00
11	20/1	RECEPT AV RACK	0.36	12		SPACE	
13	20/1	SCOREBOARD	0.50	14		SPACE	
15	20/1	BACKSTOP	0.86	16		SPACE	
17	20/1	BACKSTOP	0.86	18		SPACE	
19	20/1	BLEACHERS	0.00	20		SPACE	
21	20/1	SPARE		22		SPACE	
23	20/1	SPARE		24		SPACE	
25	20/1	SPARE		26		SPACE	
27		SPACE		28		SPACE	
29		SPACE		30		SPACE	
31		SPACE		32		SPACE	
33		SPACE		34		SPACE	
35		SPACE		36		SPACE	
37		SPACE		38	30/3	TVSS	0.00
39		SPACE		40			
41		SPACE		42			

CONNECTED LOAD	KVA	DEMAND FACTOR	DEMAND LOAD KVA	AMPS
LIGHTS	0.00	125%	0.00	0.00
RECEPTACLES	4.68	100%	4.68	12.99
HEATING	0.00	100%	0.00	0.00
LARGEST MOTOR	0.00	125%	0.00	0.00
OTHER MOTORS	0.00	100%	0.00	0.00
MISCELLANEOUS	2.22	100%	2.22	6.16
KITCH. APPLIANCES	0.00	65%	0.00	0.00
	6.90		6.90	19.15

PANEL L2A — VOLTS 208 /120 — 3 PHASE, 4 WIRE, WYE
LOCATION — AMPS 150
MOUNTING SURFACE — MLO
AIC 10,000 — GROUND BUS
FED FROM DIST. L1

CCT NO.	CCT BRKR	DESCRIPTION	LOAD KVA	CCT NO.	CCT BRKR	DESCRIPTION	LOAD KVA
1	20/1	RECEPTS CLASS 207	0.36	2	20/1	RECEPTS CLASS 204	0.72
3	20/1	RECEPTS CLASS 207	0.36	4	20/1	RECEPTS CLASS 204	0.90
5	20/1	C-RECEPTS CLASS 207	0.90	6	20/1	C-RECEPTS CLASS 204	1.44
7	20/1	RECEPTS CLASS 206	0.36	8	20/1	RECEPTS CLASS 203	0.72
9	20/1	RECEPTS CLASS 206	0.36	10	20/1	RECEPTS CLASS 203	0.90
11	20/1	C-RECEPTS CLASS 206	0.90	12	20/1	C-RECEPTS CLASS 203	
13	20/1	RECEPTS BREAK OUT 200A	0.90	14	20/1	RECEPTS CLASS 202	
15	20/1	C-RECEPTS BREAK OUT 20	0.90	16	20/1	RECEPTS CLASS 202	
17	20/1	RECEPTS LRC 205	1.08	18	20/1	C-RECEPTS CLASS 202	
19	20/1	RECEPTS CIRC 200	0.72	20	20/1	RECEPTS IDF 2A	
21	20/1	DRINKING FOUNTAIN		22	20/1	RECEPTS IDF 2A	
23	20/1	RECEPTS BATHROOMS		24	20/1	RECEPTS IDF 2A	
25	20/1	REFRIGERATOR		26	20/1	RECEPTS IDF 2A	
27	20/1	RECEPTS BREAK RM 211A		28	20/1	RECEPTS IDF 2A	
29	20/1	RECEPTS BREAK RM 211A		30	30/2	UPS IDF 2A	
31	20/1	SPARE		32			
33	20/1	SPARE		34	20/1	SPARE	
35	20/1	SPARE		36	20/1	SPARE	
37		SPACE		38	30/3	TVSS	0.00
39		SPACE		40			
41		SPACE		42			

CONNECTED LOAD	KVA	DEMAND FACTOR	DEMAND LOAD KVA	AMPS
LIGHTS	0.00	125%	0.00	0.00
RECEPTACLES	21.30	100%	21.30	59.12
HEATING	0.00	100%	0.00	0.00
LARGEST MOTOR	0.00	125%	0.00	0.00
OTHER MOTORS	0.00	100%	0.00	0.00
MISCELLANEOUS	0.30	100%	0.30	0.83
KITCH. APPLIANCES	0.70	65%	0.46	1.26
	22.30		22.06	61.22

PANEL L2B — VOLTS 208 /120 — 3 PHASE, 4 WIRE, WYE
LOCATION — AMPS 100
MOUNTING SURFACE — MLO
AIC 10,000 — GROUND BUS
FED FROM DIST. L1

CCT NO.	CCT BRKR	DESCRIPTION	LOAD KVA	CCT NO.	CCT BRKR	DESCRIPTION	LOAD KVA
1	20/1	RECEPTS RETAIL 212	1.08	2	20/1	RECEPTS RETAIL 213	1.08
3	20/1	RECEPTS CONF 212A	0.90	4	20/1	RECEPTS CONF 213A	1.08
5	20/1	RECEPTS OFFICE 212B	0.72	6	20/1	RECEPTS OFFICE 213C	0.72
7	20/1	SPARE	0.00	8	20/1	RECEPTS WORK RM 213B	0.72
9	20/1	SPARE	0.00	10	20/1	RECEPTS MECH MEZZ 213D	0.54
11	20/1	SPARE	0.00	12		SPACE	
13	20/1	SPARE	0.00	14		SPACE	
15	20/1	SPARE	0.00	16		SPACE	
17	20/1	SPARE	0.00	18		SPACE	
19	20/1	SPARE	0.00	20		SPACE	
21		SPACE		22		SPACE	
23		SPACE		24		SPACE	
25		SPACE		26		SPACE	
27		SPACE		28		SPACE	
29		SPACE		30		SPACE	
31		SPACE		32		SPACE	
33		SPACE		34		SPACE	
35		SPACE		36		SPACE	
37		SPACE		38	30/3	TVSS	0.00
39		SPACE		40			
41		SPACE		42			

CONNECTED LOAD	KVA	DEMAND FACTOR	DEMAND LOAD KVA	AMPS
LIGHTS	0.00	125%	0.00	0.00
RECEPTACLES	6.84	100%	6.84	18.99
HEATING	0.00	100%	0.00	0.00
LARGEST MOTOR	0.00	125%	0.00	0.00
OTHER MOTORS	0.00	100%	0.00	0.00
MISCELLANEOUS	0.00	100%	0.00	0.00
KITCH. APPLIANCES	0.00	65%	0.00	0.00
	6.84		6.84	18.99

PANEL L3A — VOLTS 208 /120 — 3 PHASE, 4 WIRE, WYE
LOCATION — AMPS 100
MOUNTING SURFACE — MLO
AIC 10,000 — GROUND BUS
FED FROM DIST. L1

CCT NO.	CCT BRKR	DESCRIPTION	LOAD KVA	CCT NO.	CCT BRKR	DESCRIPTION	LOAD KVA
1	20/1	RECEPT OFF 300F	0.72	2	20/1	KITCHEN MICRO	1.20
3	20/1	RECEPT OFF 303F	0.90	4	20/1	KITCHEN RECEPT	0.36
5	20/1	RECEPT OFF 303E	1.24	6	20/1	KITCHEN RECEPT	0.18
7	20/1	RECEPT ENTRY 303	0.72	8	20/1	REFRIGERATOR RECEPT	0.70
9	20/1	COPIER RECEPT	1.00	10	20/1	DRINKING FOUNTAIN	0.30
11	20/1	RECEPT CONF 303A	1.24	12	20/1	RECEPTS CIRC 300	
13	20/1	RECEPT OFF 303B	0.72	14	20/1	SPARE	
15	20/1	RECEPT COO 303C	0.90	16	20/1	SPARE	
17	20/1	RECEPT DEV/COMM 303D	1.24	18	20/1	SPARE	
19	20/1	SPARE	0.00	20		SPACE	
21	20/1	SPARE		22		SPACE	
23	20/1	SPARE		24		SPACE	
25		SPACE		26		SPACE	
27		SPACE		28		SPACE	
29		SPACE		30		SPACE	
31		SPACE		32		SPACE	
33		SPACE		34		SPACE	
35		SPACE		36		SPACE	
37		SPACE		38	30/3	TVSS	0.00
39		SPACE		40			
41		SPACE		42			

CONNECTED LOAD	KVA	DEMAND FACTOR	DEMAND LOAD KVA	AMPS
LIGHTS	0.00	125%	0.00	0.00
RECEPTACLES	9.30	100%	9.30	25.81
HEATING	0.00	100%	0.00	0.00
LARGEST MOTOR	0.00	125%	0.00	0.00
OTHER MOTORS	0.00	100%	0.00	0.00
MISCELLANEOUS	1.30	100%	1.30	3.61
KITCH. APPLIANCES	1.90	65%	1.24	3.43
	12.50		11.84	32.85

PANEL L3B — VOLTS 208 /120 — 3 PHASE, 4 WIRE, WYE
LOCATION — AMPS 150
MOUNTING SURFACE — MLO
AIC 10,000 — GROUND BUS
FED FROM DIST. L1

CCT NO.	CCT BRKR	DESCRIPTION	LOAD KVA	CCT NO.	CCT BRKR	DESCRIPTION	LOAD KVA
1	20/1	RECEPT BR 300B,C	0.54	2	20/1	RECEPT OFF 301H	0.90
3	20/1	RECEPT BR 300A,G	0.36	4	20/1	RECEPT OFF 301H	0.90
5	20/1	IDF 3A RECEPT	0.36	6	20/1	RECEPT MUSIC 301F	0.72
7	20/1	RECEPT OFF 302A	0.72	8	20/1	RECEPT MUSIC 301F	0.72
9	20/1	RECEPT OFF 302B	0.72	10	20/1	RECEPT GAME 301G	0.54
11	20/1	RECEPT OFF 302C	0.72	12	20/1	RECEPT GAME 301G	
13	20/1	RECEPT RETAIL 302	0.54	14	20/1	REFRIGERATOR	
15	20/1	RECEPT RETAIL 302	0.72	16	20/1	KITCHEN RECEPTS	
17	20/1	RECEPT OFF 302D	0.72	18	20/1	MICROWAVE	
19	20/1	RECEPT OFF 301C	0.90	20	20/1	DISHWASHER	
21	20/1	RECEPT OFF 301B		22	20/1	RECEPT ART STEM 301D	
23	20/1	RECEPT OFF 301A		24	20/1	RECEPT ART STEM 301D	
25	20/1	RECEPT OFF		26	20/1	RECEPT SNOEZ 301E	
27	20/1	RECEPT ROOF		28	20/1	SPARE	
29	20/1	RECEPT ROOF		30	20/1	SPARE	
31	20/1	SPARE		32		SPACE	
33	20/1	SPARE		34		SPACE	
35	20/1	SPARE		36		SPACE	
37		SPACE		38	30/3	TVSS	0.00
39		SPACE		40			
41		SPACE		42			

CONNECTED LOAD	KVA	DEMAND FACTOR	DEMAND LOAD KVA	AMPS
LIGHTS	0.00	125%	0.00	0.00
RECEPTACLES	18.72	100%	18.72	51.96
HEATING	0.00	100%	0.00	0.00
LARGEST MOTOR	0.00	125%	0.00	0.00
OTHER MOTORS	0.00	100%	0.00	0.00
MISCELLANEOUS	0.00	100%	0.00	0.00
KITCH. APPLIANCES	3.10	65%	2.02	5.59
	21.82		20.74	57.55

PANEL L3M — VOLTS 208 /120 — 3 PHASE, 4 WIRE, WYE
LOCATION — AMPS 600
MOUNTING SURFACE — MLO
AIC 22,000 — GROUND BUS
FED FROM DIST. L1

CCT NO.	CCT BRKR	DESCRIPTION	LOAD KVA	CCT NO.	CCT BRKR	DESCRIPTION	LOAD KVA
1	15/2	BC-3-1	0.21	2	20/2	VFC-2-1 THRU 2-7	0.42
3				4			
5	15/2	BC-2-1	0.21	6	20/2	VFC-2-8 THRU 2-16	0.59
7				8			
9	100/3	VRF-R-1	20.60	10	20/2	VFC-3-1 THRU 3-7B	0.52
11				12			
13				14	20/2	VFC-3-8 THRU 3-16	0.90
15	150/3	VRF-R-2	31.68	16			
17				18	15/2	VHP-C-1	0.98
19				20			
21	150/3	VRF-R-3	31.68	22	15/2	ERV-C-1	1.09
23				24			
25				26	15/2	ERV-2-1	0.73
27	60/3	VRF-4-4	11.52	28			
29				30	15/2	ERV-2-2	0.73
31				32			
33	100/3	RTU-R-1	34.92	34	15/2	ERV-2-3	0.73
35				36			
37				38	15/2	ERV-2-4	0.67
39	70/3	RTU-R-2	23.76	40			
41				42	15/2	ERV-2-5	0.67
43				44			
45	20/2	SPARE	0.00	46	15/2	ERV-R-1	0.78
47			0.00	48			
49		SPACE	0.00	50	20/1	EF-R-1	0.00
51		SPACE	0.00	52	20/1	SPARE	0.00
53		SPACE	0.00	54	20/1	SPARE	0.00
55		SPACE	0.00	56		SPACE	
57		SPACE	0.00	58		SPACE	
59		SPACE	0.00	60		SPACE	

CONNECTED LOAD	KVA	DEMAND FACTOR	DEMAND LOAD KVA	AMPS
LIGHTS	0.00	125%	0.00	0.00
RECEPTACLES	0.00	100%	0.00	0.00
HEATING	0.00	100%	0.00	0.00
LARGEST MOTOR	34.92	125%	43.65	121.16
OTHER MOTORS	123.07	100%	123.07	341.61
MISCELLANEOUS	5.40	100%	5.40	14.99
KITCH. APPLIANCES	0.00	65%	0.00	0.00
	163.39		172.12	477.76

PANEL EV — VOLTS 208 /120 — 3 PHASE, 4 WIRE, WYE
LOCATION — AMPS 300
MOUNTING SURFACE — MLO
AIC 10,000 — GROUND BUS
FED FROM DIST. L1

CCT NO.	CCT BRKR	DESCRIPTION	LOAD KVA	CCT NO.	CCT BRKR	DESCRIPTION	LOAD KVA
1	40/2	EV CHARGER	8.32	2		SPACE	0.00
3				4		SPACE	
5	40/2	EV CHARGER	8.32	6		SPACE	0.00
7				8		SPACE	
9	40/2	FUTURE EV CHARGER	8.32	10		SPACE	0.00
11				12		SPACE	
13	40/2	FUTURE EV CHARGER	8.32	14		SPACE	
15				16		SPACE	
17		SPACE	0.00	18		SPACE	
19		SPACE		20		SPACE	
21		SPACE		22		SPACE	
23		SPACE		24		SPACE	
25		SPACE		26		SPACE	
27		SPACE		28		SPACE	
29		SPACE		30		SPACE	
31		SPACE		32		SPACE	
33		SPACE		34		SPACE	
35		SPACE		36		SPACE	
37		SPACE		38	30/3	TVSS	0.00
39		SPACE		40			
41	20/1	SPARE		42			

CONNECTED LOAD	KVA	DEMAND FACTOR	DEMAND LOAD KVA	AMPS
LIGHTS	0.00	125%	0.00	0.00
RECEPTACLES	0.00	100%	0.00	0.00
HEATING	0.00	100%	0.00	0.00
LARGEST MOTOR	0.00	125%	0.00	0.00
OTHER MOTORS	0.00	100%	0.00	0.00
MISCELLANEOUS	33.28	100%	33.28	92.38
KITCH. APPLIANCES	0.00	65%	0.00	0.00
	33.28		33.28	92.38

PANEL LEL — VOLTS 208 /120 — 3 PHASE, 4 WIRE, WYE
LOCATION — AMPS 50
MOUNTING SURFACE — MLO
AIC 10,000 — GROUND BUS
FED FROM DIST. L1

CCT NO.	CCT BRKR	DESCRIPTION	LOAD KVA	CCT NO.	CCT BRKR	DESCRIPTION	LOAD KVA
1	20/1	PIT LIGHTS	0.10	2	20/1	SPARE	0.00
3	20/1	RECEPT IN PIT	0.18	4	20/1	SPARE	0.00
5	20/1	CAB LIGHTS	0.10	6	20/1	SPARE	0.00
7	20/1	RECEPT IN CONTROL ROOM	0.18	8		SPACE	0.00
9	20/1	SUMP PUMP	0.00	10		SPACE	0.00
11		SPACE	0.00	12		SPACE	
13		SPACE	0.00	14		SPACE	
15		SPACE	0.00	16		SPACE	
17		SPACE	0.00	18		SPACE	
19		SPACE	0.00	20		SPACE	
21		SPACE		22		SPACE	
23		SPACE		24		SPACE	

CONNECTED LOAD	KVA	DEMAND FACTOR	DEMAND LOAD KVA	AMPS
LIGHTS	0.20	125%	0.25	0.69
RECEPTACLES	0.36	100%	0.36	1.00
HEATING	0.00	100%	0.00	0.00
LARGEST MOTOR	0.00	125%	0.00	0.00
OTHER MOTORS	0.00	100%	0.00	0.00
MISCELLANEOUS	0.00	100%	0.00	0.00
KITCH. APPLIANCES	0.00	65%	0.00	0.00
	0.56		0.61	1.69

TFWB ENGINEERS PLLC
Travis Fitzmaurice Wartelle Balangue Engineers Inc.
1200 Westlake Ave. N., #509
Seattle, WA 98109
p: 206-285-7228 | info@tf-wb.com

3427 BEACON AVE S
SEATTLE 98144
ANJALI@AGRANTDESIGN.COM
206-512-4209

anjali grant design LLC

KEVIN E. WARTELLE — STATE OF WASHINGTON — 44109 — REGISTERED PROFESSIONAL ENGINEER

3700 E MERCER WAY
BARNABIE POINT PROJECT

NO.	DATE	DESCRIPTION
	4 JUNE 2025	BUILDING PERMIT

PROJECT: 23-101

PANEL SCHEDULES

E-803

D:\CAD\shell rvt 23-101E-R20.dwg
2025-06-04 10:03 PM

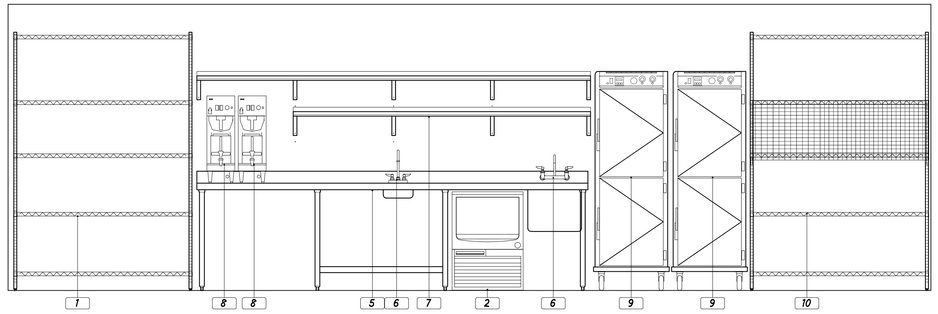

A ELEVATION

SCALE: 1/2" = 1'-0"

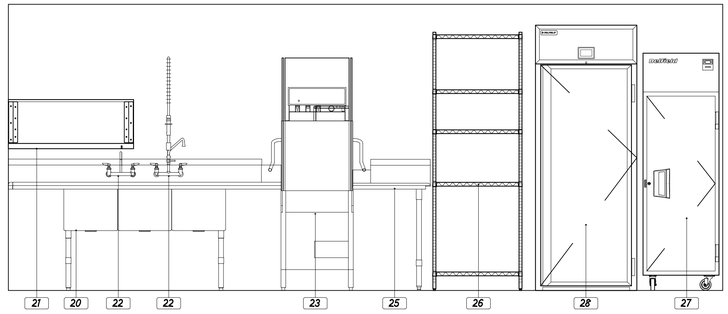

B ELEVATION

SCALE: 1/2" = 1'-0"

Item No	PROVIDED BY: KEC	GC	OWNER	Quantity	Description	Manufacturer / Model #	ELECTRICAL: KW	Amps	HP	Voltage	Phase	Connection	PLUMBING: Hot	Cold	Waste	Notes
1	X			1	DRY STORAGE SHELVING	OLYMPIC CHROME WIRE										
2	X			1	ICE MACHINE	HOSHIZAKI KM-116BAJ		5.5		115	1	DCO			1 1/2"	INDIRECT WASTE, CONNECT TO ITEM #3
3	X			1	WATER FILTRATION SYSTEM	HOSHIZAKI H9320-51								3/4"		
4					SPARE NUMBER											
5	X			1	STAINLESS STEEL TABLE WITH PREP / HAND SINK	CUSTOM STAINLESS STEEL									1 1/2"	INDIRECT WASTE / DIRECT WASTE
6	X			2	FAUCET	T&S B-231 / B-0314							1/2"	1/2"		
7	X			2	STAINLES STEEL WALL SHELF	CUSTOM STAINLESS STEEL										
8			X	2	COFFEE BREWER	OWNER		X		115	1	DCO		1/2"		VERIFY REQUIREMENTS WITH OWNER
9	X			2	MOBILE HEATED CABINET	CRES COR CO-151-F-1818D		39.0		208	1	SCO				NEMA 6-50P
10	X			1	WIRE SHELVING UNIT	OLYMPIC CHROME WIRE										
11					SPARE NUMBER											
12					SPARE NUMBER											
13					SPARE NUMBER											
14					SPARE NUMBER											
15					SPARE NUMBER											
16					SPARE NUMBER											
17					SPARE NUMBER											
18					SPARE NUMBER											
19					SPARE NUMBER											
20	X			1	SOILED DISH TABLE WITH THREE COMPARTMENT SINK	JOHN BOOS DT3B18244-2D18L									2"	DIRECT WASTE
21	X			1	SLANT RACK SHELF	JOHN BOOS PB-SRW-42										
22	X			2	PRE-RINSE FAUCET	T&S B-0133-12CRBJST							1/2"	1/2"		
23	X			1	DISHWASHER	JACKSON CONSERVER XL-HH		10.0		120	1	DCO			2"	INDIRECT WASTE, VERIFY REQUIREMENTS WITH OWNER
24		X		1	GREASE INTERCEPTOR	GENERAL CONTRACTOR										
25	X			1	CLEAN DISH TABLE	JOHN BOOS JDTC-20-24R										
26	X			1	CLEAN DISH STORAGE SHELVING	OLYMPIC CHROME GREEN										
27	X			1	REACH-IN REFRIGERATOR	DELFIELD 6025XL-S		4.2		115	1	DCO				NEMA 5-15P
28	X			1	ROLL IN REFRIGERATOR	DELFIELD GARRI1P-S		6.0		115	1	DCO				NEMA 5-15P

General Notes

1. THE ELECTRICAL CONTRACTOR SHALL SUPPY AND INSTALL SEAL-TITE FLEX CONDUIT TO ALL FOOOD SERVICE EQUIPMENT IN DAMP AREAS, I.E. SCULLERY, BAR, ROOF, ETC. FLEX CONNECTIONS AT ALL FANS ON THE ROOF SHALL BE OF EXTRA LENGTH TO ALLOW FULL FAN REMOVAL FOR THE EASE OF CLEANING.
2. THE ELECTRICAL CONTRACTOR SHALL PROVIDE FUSED DISCONNECTS FOR EQUIPMENT HOOK-UPS AS REQUIRED BY CODE AND LABELING.
3. THE ELECTRICAL CONTRACTOR SHALL PROVIDE AND INSTALL A 48" MINIMUM CORD AND PLUG FOR EACH PIECE OF EQUIPMENT SO NOTED. USE 90 DEGREE ELBOW OUT OF UNIT.
4. THE ELECTRICAL CONTRACTOR SHALL PROVIDE FOR HOOK-UP OF A THERMOSTAT, SOLENOID, BLOWER COIL AND COMPRESSOR FOR EACH REFRIGERATED UNIT. MAGNETIC STARTERS AND/OR THERMAL PROTECTORS SHALL BE INCLUDED AS NECESSARY.
5. THE ELECTRICAL CONTRACTOR SHALL PROVIDE 1" CONDUIT AND JUNCTION BOXES AT EACH CASH REGISTER TERMINAL SO AS TO INTERCONNECT ALL UNITS TO EACH OTHER AND TO THE CENTRAL PROCESSING TERMINAL. CONSULT WITH THE OWNER'S REPRESENTATIVE FOR EXACT LOCATIONS OF ALL TIE-IN UNITS.
6. IT SHALL BE THE RESPONSIBILITY OF THE PLUMBING AND ELECTRICAL CONTRACTORS TO MAKE ALL REQUIRED WATER, GAS, DRAIN AND ELECTRICAL CONNECTIONS FOR ALL MAKE-UP AIR SYSTEM UNITS.
7. THE GENERAL CONTRACTOR SHALL PHOTOGRAPH ALL WALLS CONTAINING BACKING PRIOR TO SHEETROCK / FRP INSTALLATION.
8. THE PLUMBING CONTRACTOR SHALL SUPPLY AND INSTALL WATER LINE BACK CHECK VALVES AS REQUIRED PER CODE.
9. COMMUNICATION CABLES ARE SUPPLIED AND INSTALLED BY ELECTRICAL CONTRACTOR.
10. IT SHALL BE THE RESPONSIBILITY OF THE ELECTRICAL CONTRACTOR TO INSTALL ALL OWNER SUPPLIED COMPUTER / COMMUNICATION CABLES AS PER OWNERS DIRECTION.

General Notes

- IT SHALL BE THE RESPONSIBILITY OF THE GENERAL CONTRACTOR AND ALL SUB-CONTRACTORS TO VERIFY THE ACTUAL SPACE AND MECHANICALREQUIREMENTS OF ALL ITEMS SHOW AS FUTURE, N.I.C., SUPPLIED BY "OTHERS", ETC. WITH THE OWNER PRIOR TO ROUGH-IN AND CONNECTION
- THE GENERAL CONTRACTOR SHALL IMMEDIATELY INFORM CMA RESTAURANT SUPPLY & DESIGN PROJECT MANAGER AND THE OWNER OF ANY RED LINES, CORRECTIONS, ETC. ON THE PERMIT PLANS AND OF ANY INSPECTION CORRECTIONS REQUESTED CONCERNING THESE DRAWINGS OR EQUIPMENT AS LISTED FOR THIS PROJECT.
- THE GENERAL CONTRACTOR SHALL PROPERLY SEAL ALL WALL AND FLOOR PENETRATIONS AFTER THE INSTALLATION OF RELATED EQUIPMENT AND FURNISHING.
- IT SHALL BE NOTED BY THE GENERAL CONTRACTOR AND ALL SUB-CONTRACTORS THAT THIS SET OF PLANS AND THE INFORMATION CONTAINED WITH-IN IN NOW WAY RELIEVES SAID PARTIES OF THEIR RESPONSIBILITIY TO INVESTIGATE AND COMPLY WITH ALL APPLICABLE CODES AND ORDINANCES, AND TO PERFORM ALL WORK TO THE HIGHEST STANDARDS.
- SUITABLE WALL BACKING AS SHOWN ON THESE PLANS AND AS REQUIRED BY THE OWNER SHALL BE PROVIDED AND INSTALLED BY THE GENERAL CONTRACTOR.
- THESE PLANS SHALL BE READ IN CONJUNCTION WITH THE EQUIPMENT CUT SHEET BOOK SUPPLIED BY CMA RESTAURANT SUPPLY & DESIGN, INC. AND BY THIS REFERENCE IS MADE A PART HEROF.

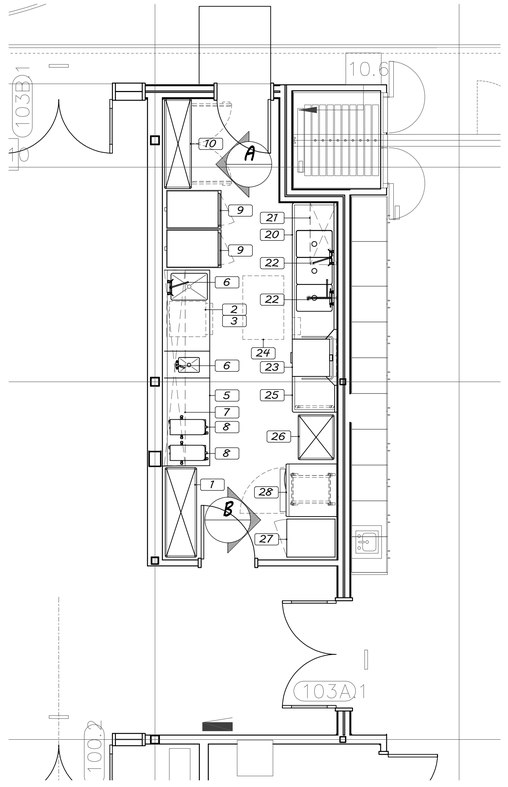

VERIFY EQUIPMENT REQUIREMENTS WITH FINAL EQUIPMENT SELECTIONS

100% CONSTRUCTION DOCUMENTS - 15 DECEMBER 2025

UNPUBLISHED WORK
©2025 CMA, INC.

Herzl-Ner Tamid
3700 E Mercer Way
Mercer Island, WA 98040

CMA
RESTAURANT SUPPLY AND DESIGN, INC.
12811 NE 126th Place, Kirkland, Washington 98034
EMAIL: jeffw@cmarestaurantsupply.com
cell 206 356 8833
office 425 747 7223

KITCHEN EQUIPMENT PLAN

Date: 2-18-2025
JG WINTER
Scale: 1/4"=1'-0"
Project #: 1773

K-1

5:08 AM 12/5/25 S:\JEFF WINTER\MERCER PONTOON 4-bld

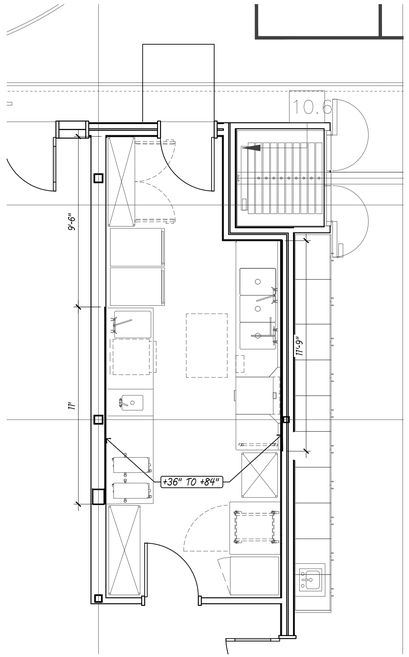

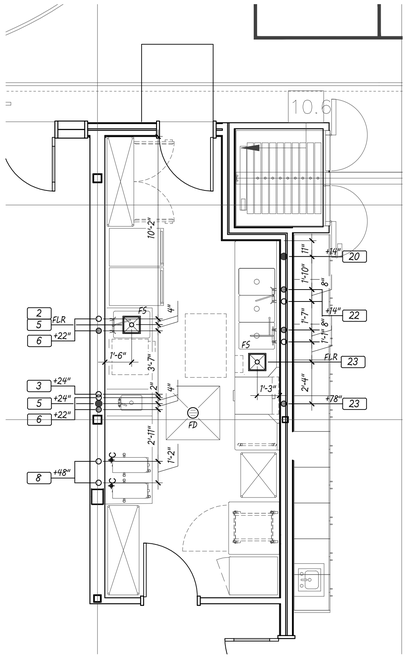

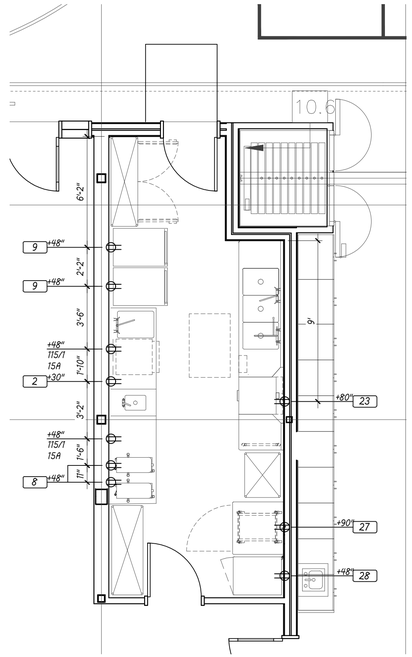

WALL BACKING NOTES:

1. GENERAL CONTRACTOR SHALL CONSULT WITH OWNER AND CMA RESTAURANT SUPPLY AT THE TIME OF LAYOUT FOR WALL BACKING CONFIRMATION OF ALL DIMENSIONS OF ALL AND UP-DATE REQUIREMENTS.
2. WALL BACKING TO BE USED FOR WALL MOUNTED EQUIPMENT AND SHELVES.
3. WALL BACKING TO BE 5/8" PLYWOOD.
4. WALL WALL BACKING TO BE BUILT INTO WALL SO THAT FINISH WALL IS FLUSH SURFACE.

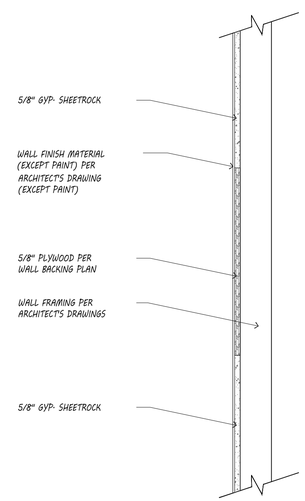

PLYWOOD BACKING DETAIL

SCALE: NONE

PLUMBING NOTES .

1. IT IS THE PLUMBING CONTRACTORS RESPONSIBILITY TO SIZE, SUPPLY AND INSTALL A GREASE INTERCEPTOR / TRAP IF ONE IS REQUIRED.
2. THE PLUMBING CONNECTIONS, SPECIFICATIONS AND DIMENSIONS SHOWN ON THESE PLANS ARE FOR THE FOOD SERVICE EQUIPMENT ONLY. SEE ARCHITECT'S PLAN SET FOR ALL OTHER PLUMBING REQUIREMENTS FOR THIS PROJECT.
3. ALL PLUMBING ROUGH-IN WORK AND FINAL CONNECTIONS FOR ALL ITEMS SHOWN AND SPECIFIED ON THESE PLANS BY CMA RESTAURANT SUPPLY & DESIGN SHALL BE PERFORMED BY THE PLUMBING CONTRACTOR.
4. THE PLUMBING CONTRACTOR SHALL PROVIDE AND INSTALL INSULATION MATERIAL ON ALL DRAIN LINES FROM ICE BINS, ICE PANS, ETC. SO AS TO ELIMINATE CONDENSATION FORMATION.
5. UNLESS OTHERWISE SPECIFIED IN THESE PLANS OR OTHER WRITTEN CONTRACTS, IT SHALL BE THE RESPONSIBILITY OF THE PLUMBING CONTRACTOR TO PROVIDE ALL PLUMBING-TYPE MATERIALS INCLUDING VALVES, TRAPS, LINE STRAINERS, FLOOR SINK COVERS, PRESSURE REGULATORS, SIPHON BREAKERS, ETC.
6. IT SHALL BE THE RESPONSIBILITY OF THE GENERAL CONTRACTOR TO VERIFY THAT THE LOCATIONS FOR ALL MECHANICAL REQUIREMENTS WHICH REQUIRE FLOOR PENETRATIONS DO NOT CONFLICT WITH STRUCTURAL MEMBERS IN THE FLOOR.
7. THE GENERAL CONTRACTOR SHALL SUPERVISE THE LOCATION OF ALL FLOOR DRAINS ON THE PROJECT SO AS TO ENSURE THE BEST SLOPE POSSIBLE OF THE SURROUNDING FLOOR TO THESE DRAINS.
8. ALL DRAIN LINES FROM EQUIPMENT REQUIRING CONDENSATION REMOVAL SHALL BE RUN IN COPPER.
9. PLUMBING CONTRACTOR TO SUPPLY WATER PRESSURE REDUCING VALVE SET AT 20 PSI FOR EACH DISH WASHER AND GLASS WASHER.

PLUMBING LEGEND

○	CW–COLD WATER
○F	CW–COLD WATER – FILTERED
⊙	HW–HOT WATER
●	CLOSED DRAIN – DIRECT WASTE
FS	12" X 12" FLOOR SINK – INDIRECT WASTE
⊕	NATURAL GAS
FD	FLOOR DRAIN

ELECTRICAL NOTES .

1. THE CONTRACTOR SHALL PROVIDE AND INSTALL STAINLESS STEEL OUTLET AND RECEPTACLE COVERS IN ALL KITCHEN EQUIPMENT AREAS.
2. THE ELECTRICAL CONTRACTOR SHALL CONNECT ALL REMOTE COMPRESSORS AND PROVIDE DISCONNECTS, MAGNETIC STARTERS, AND THERMAL OVERLOAD PROTECTION AS REQUIRED.
3. THE ELECTRICAL CONNECTIONS, SPECIFICATIONS AND DIMENSIONS SHOWN ON THESE PLANS ARE FOR FOOD SERVICE EQUIPMENT ONLY. SEE THE ARCHITECT'S PLAN SET FOR ALL OTHER ELECTRICAL REQUIREMENTS FOR THIS PROJECT.
4. ALL ELECTRICAL ROUGH-IN WORK AND FINAL CONNECTIONS FOR ALL ITEMS SHOWN AND SPECIFIED ON THESE PLANS BY CMA RESTAURANT SUPPLY & DESIGN SHALL BE PERFORMED BY THE ELECTRICAL CONTRACTOR.
5. UNLESS OTHERWISE SPECIFIED IN THESE PLANS OR OTHER WRITTEN CONTRACTS, IT SHALL BE THE RESPONSIBILITY OF THE ELECTRICAL CONTRACTOR TO PROVIDE ALL ELECTRICAL TYPE MATERIALS, INCLUDING WIRING, SWITCHES, DISCONNECTS, FLEX, CONDUIT, CONTACTORS, TRANSFORMERS, THERMAL OVERLOAD PROTECTORS, MAGNETIC STARTERS, ELECTRICAL PANELS, CORDS, PLUGS, COVERS, ETC.
6. ALL DIMENSIONS SHOWN ARE FROM GRID LINES, FINISHED WALLS OR FINISHED FLOORS TO CENTER LINE OF ELECTRICAL BOXES. HEIGHTS ARE NOT TO BE TAKEN FROM CURBS OR PLATFORMS.
7. THE SYMBOLS SHOWN ON THIS PLAN ARE FOR INDICATION OF ROUGH-IN LOCATION AND TYPE OF CONNECTION ONLY. THE ELECTRICAL CONTRACTOR SHALL PROVIDE CIRCUITS AND CONDUIT RUNS AS PER GOOD PRACTICE AND CODE.
8. THE ELECTRICAL CONTRACTOR SHALL PROVIDE FUSED DISCONNECTS FOR EQUIPMENT HOOK-UPS AS REQUIRED BY CODE AND LABELING

ELECTRICAL LEGEND

	115 VOLT DUPLEX OUTLET
DI	115 VOLT DCO, DEDICATED/ISOLATED
	208V SPECIALTY OUTLET
J	JUNCTION BOX
◆	COMMUNICATIONS CABLE – VERIFY SPEC'S AND REQUIREMENTS WITH OWNER
$	ON/OFF SWITCH
	LIGHT FIXTURE BY K.E.C. AND INSTALLED BY ELECTRICAL CONTRACTOR

VERIFY EQUIPMENT REQUIREMENTS WITH FINAL EQUIPMENT SELECTIONS

GFCI RECEPTACLES SHALL BE PASS & SEYMOUR NO. 2097W
SEE ARCHITECTURAL DRAWINGS FOR OUTLET COLORS AT SPECIFIC LOCATIONS ON INTERIOR ELEVATIONS

100% CONSTRUCTION DOCUMENTS - 15 DECEMBER 2025

UNPUBLISHED WORK
©2025 CMA. INC.

Herzl-Ner Tamid
3700 E Mercer Way
Mercer Island, WA 98040

CMA
RESTAURANT SUPPLY AND DESIGN
12811 NE 126th Place, Kirkland, Washington 98034
EMAIL: jeffw@cmarestaurantsupply.com
cell 206 356 8933
office 425 747 7223

KITCHEN ELECTRICAL ROUGH-IN PLAN
KITCHEN PLUMBING ROUGH-IN PLAN
KITCHEN WALL BACKING PLAN

Date: 4-8-2025
JG WINTER
Scale: 1/4"=1'-0"
Project #: 1773

K-2

S:\09 MR 12/15/25 6:\JEFF WINTER\MERCER TOWN PLAN 4.DWG